# Lyman® 48th Edition Reloading Handbook

**All New!**

- *Features Hot New Calibers Including Remington and Winchester "Short Mags"*
- *Articles by Famous Writers and Shooters*
- *Complete Step-by-Step Reloading Instruction*
- *All New Reloading Data*
- *The Largest Selection of Powders and Components Found in Any Reloading Manual*

**"The World's Most Comprehensive Reloading Manual"**

# Lyman® -service to the shooter since 1878

Over 120 years have passed since William Lyman founded his company with the patent of a simple, yet highly effective tang sight for rifles that is still in our product line. Today's Lyman Products Corp. is a diversified manufacturer offering quality products under brand names well known to shooters including Lyman, Pachmayr and Trius Traps. One long-standing factor though throughout our history is the publication of Lyman's long and respected series of reloading manuals. These publications have become the bible for literally generations of reloaders. Our goal is to provide the shooter with the most comprehensive data resource possible. This manual, our 48 th edition, is the result of over three and a half years of rigorous testing and evaluation. We have utilized the widest variety of components from major manufacturers found in any reloading publication to date. In this new 48th Edition Reloading Handbook, the shooter will find data for both the newest short magnums and old favorites of yesteryear. Our broad selection of cast bullet data is second to none. Lyman continues its tradition of giving the shooter informative editorial content from some of the best-known names in the field. In-depth articles provide shooters with easy to understand explanations of ballistics, barrel care, and proper bullet selection, as well as basic reloading procedures. Whether one is a beginning novice or a long-time veteran shooter, there is something for everyone here. We believe this edition is our best one yet and know it will serve you well as a valuable and useful reference for years to come.

J. Mace Thompson
President

# 48th Reloading Handbook

Thomas J. Griffin, *Editor*

Reloading Handbook, 48th Edition
Copyright© 2002 by Lyman Products Corp.

All rights reserved. No part of this
publication may be reproduced, stored
in a retrieval system, or may transmitted,
in any form or by any means:
electronic, mechanical, photocopying,
recording, etc. without the prior written consent
of **Lyman Products Corporation.**

IBM 9817048
UPC 011516970480

First Printing: December 2002
Second Printing: May 2004

Published by:
Lyman Products Corporation
475 Smith Street
Middletown, CT 06457
J. Mace Thompson, President
Printed in the United States of America

**WARNING**

The publisher and editors have no control over how reloading is conducted by the individual or with what components and dies. Every change of equipment, procedure, and component lot will effect ballistics and/or the safety and usefulness of a load. Therefore, no warranties are implied or expressed by the data and copy contained in this book. We specifically disclaim any warranties of fitness for any and all particular purpose and specifically disclaim any and all liablilty for consequential damages of any kind.

The individual assumes all risks for the safety of reloaded ammunition. Improperly loaded ammunition, or the failure to follow all necessary precautions, may result in serious personal injury and/or death to the shooter or bystanders.

There are many precautions to which the reloader need adhere. This volume deals with many of these but cannot possibly foresee or include all possible cautions and caveats.

# National Associations of Interest

Membership in an organization made up of shooters with interests similar to our own is one of the best ways to increase your enjoyment of the shooting sports. Below is a list of organizations that will be of interest to many reloaders. Please write for membership information.

American Single Shot Rifle Assoc.
709 Carolyn Drive
Delphos OH 45833

Cast Bullet Assoc.
4103 Foxcraft Drive
Traverse City, MI 49684

International Benchrest Shooters
RR1, Box 250 BB
Springville, PA 18844

International Handgun Metallic Silhouette Assoc.
PO Box 368
Burlington, IA 52601

International Practical Shooting Federation
PO Box 811
Sedro Wooley, WA 98284

National Bench Rest Shooters Assoc.
2835 Guilford Lane
Oklahoma City, OK 73120

National Reloading Manufacturers Assoc.
Suite 300, One Centerpointe Drive
Lake Oswego, OR 97035

National Rifle Assoc.
11250 Waples Mill Road
Fairfax, VA 22030

National Shooting Sports Foundation, Inc.
11 Mile Hill Road
Newtown, CT 06470

# Acknowledgements

Lyman would like to thank the following companies for their assistance in the production of this handbook. Without their strong support this effort would not have been possible. Our sincere thanks and appreciation to all.

Barnes
PO Box 215
American Fork, UT 84003

Browning
One Browning Place
Morgan, UT 84050

Buffalo Arms
99 Raven Ridge
Sandpoint, ID 83864

Accurate Arms Co.
5891 Hwy. 230 W.
McEwen, TN 37101

Alliant Techsystems
PO Box 6
Radford, VA 24141

CCI/Speer
Box 856
Lewiston, ID 83501

Federal Cartridge Co.
900 Ehlen Drive
Anoka, MN 55303

Hodgdon Powder Co.
PO Box 2932
Shawnee Mission, KS 66201

Hornady Manufacturing
PO Box 1848
Grand Island, NE 68802

IMR Powder Co.
Plattsburgh, NY 12901

Kaltron-Pettibone
VihtaVuori Powders
1241 Ellis Street
Bensenville, IL 60106

Navy Arms
815 22nd Street
Union City, NJ 07087

Nosler Bullets Inc.
PO Box 671
Bend, OR 97709

Olin/Winchester
427 North Shamrock
East Alton, IL 62024

RCBS
605 Oro Dam Blvd.
Oroville, CA 95965

Redding
1089 Starr Road
Cortland, NY 13045

Remington Arms Co.
870 Remington Drive
Madison, NC 27025

Sierra Bullets
1400 Henry Street
Sedalia, MO 65301

Starline
1300 West Henry Street
Sedalia, MO 65301

Sturm, Ruger & Co.
200 Ruger Road
Prescott, AZ 86301

Swift Bullet Co.
PO Box 27
Quinter, KS 67752

Thompson/Center Arms Co.
PO Box 5002
Rochester, NH 03867

U.S. Repeating Arms Co.
275 Winchester Ave.
New Haven, CT 06511

Weatherby
3100 El Camino Real
Atascadero, CA 93422

# Lyman 48th Edition Reloading Handbook

## Development Staff

| | |
|---|---|
| **Publisher** | J. Mace Thompson |
| **Editor:** | Thomas J. Griffin |
| **Handbook Writers And Contributing Authors:** | Ed Matunas<br>Bryce Towsley<br>Paul Matthews<br>Butch Fisher |
| **Lyman Handbook Technical Coordinator:** | Jeff Henry |
| **Lyman Staff Associates:** | Jim Sheehan<br>Eric Fisk |
| **Outside Contributors:** | CAS Advertising<br>Michael Nicastre<br>Monique Przybysz |
| **Photo Credits:** | John Giammatteo<br>Bryce Towsley<br>Ed Matunas |

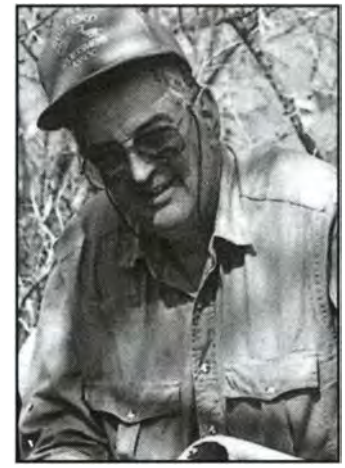
Ed Matunas

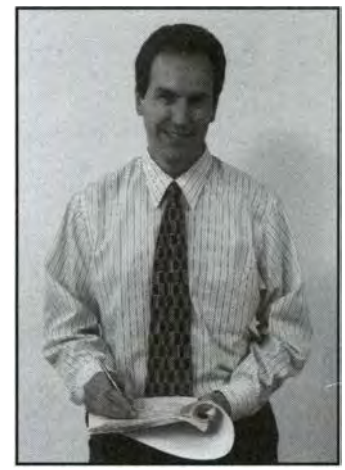
Thomas J. Griffin

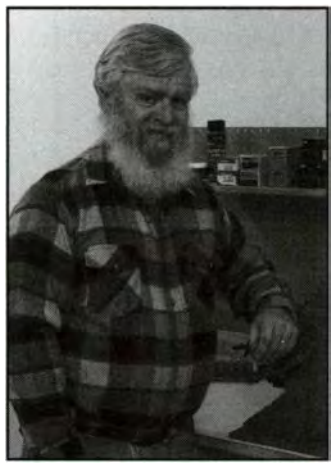
Jim Sheehan

Eric Fisk

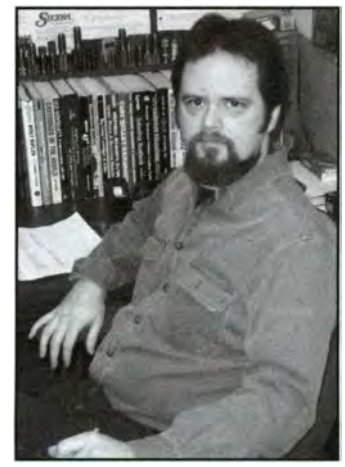
Jeff Henry

# Table of Contents


Page

**Acknowledgements** ..... **4**

**Handbook Staff** ..... **5**

**Editor's Foreword** ..... **8,9**

**1. An Introduction To Reloading** ..... **11**
1. Why Reload? ..... 12
2. Getting Started Safely ..... 14

**2. The Basics Of Reloading** ..... **21**
3. Reloading Rifle Cartridges ..... 22
4. Reloading Handgun Cartridges ..... 32

**3. The Components of Reloading** ..... **43**
5. Cases and Their Preparation ..... 44
6. Primers ..... 56
7. Propellant Powders ..... 62
8. Jacketed Bullets ..... 72
9. Cast Bullets ..... 80

**4. Pressure, Velocity and Accuracy** ..... **87**
10. The Road to Accurate Ammo ..... 88
11. The Mystery of Pressure ..... 96
12. The Flight of a Bullet ..... 102
13. Reloading the 45-70 for Accuracy ..... 112
14. Barrel Care and Cleaning for Accuracy ..... 120

**5. Data Section** ..... **127**
**Rifle Data** ..... **131**
**Handgun Data** ..... **312**
**Thompson/Center-Contender and Encore** ..... **366**

**17 Caliber Cartridge**
17 Remington ..... 131
**22 Caliber Cartridges**
22 Hornet (5.6x35mm) ..... 132
218 Bee ..... 134
222 Remington ..... 136
22 PPC ..... 139
222 Remington Magnum ..... 141
223 Remington ..... 143
225 Winchester ..... 147
224 Weatherby Magnum ..... 149
22-250 Remington ..... 151
220 Swift ..... 154
**24 (6mm) Caliber Cartridges**
6mm PPC ..... 156
243 Winchester (6.2x52mm) ..... 158
6mm Remington (244 Remington) ..... 161
240 Weatherby Magnum ..... 163
**25 Caliber Cartridges**
25-20 Winchester (25 WCF) ..... 165
250 Savage (250/3000 Savage) ..... 166
257 Roberts ..... 168
25-06 Remington ..... 170
257 Weatherby Magnum ..... 172
**26 (6.5mm) Caliber Cartridges**
260 Remington ..... 174
6.5x55mm Swedish Mauser ..... 177
264 Winchester Magnum ..... 179
**27 Caliber Cartridges**
270 Winchester ..... 180
270 WSM (Winchester Short Magnum) ..... 182
270 Weatherby Magnum ..... 184
**28 (7mm) Caliber Cartridges**
7-30 Waters ..... 186
7mm-08 Remington ..... 188
7mm Mauser (7x57mm) ..... 190
284 Winchester ..... 192
280 Remington (7mm Express Remington) ..... 194
7mm Remington Magnum ..... 196
7mm Weatherby Magnum ..... 199
7mm WSM (Winchester Short Magnum) ..... 201
7mm Rem. Short Action Ultra mag ..... 203
7mm STW (Shooting Times Westerner) ..... 205
7mm Remington Ultra Mag ..... 207
**30 Caliber Cartridges**
30 M-1 Carbine ..... 209
30-30 Winchester ..... 210
300 Savage ..... 212
30-40 Krag ..... 214
308 Winchester (7.62 X 51mm)(7.62 NATO) ..... 216
30-06 Springfield (7.62x63mm) ..... 220
300 H&H Magnum (7.63x72mm) ..... 224
300 Remington Short Action Ultra Mag (SAUM) ..... 226
300 WSM (Winchester Short Magnum) ..... 228
300 Winchester Magnum ..... 230
300 Remington Ultra Mag ..... 233
300 Weatherby Magnum ..... 235
30-378 Weatherby Magnum ..... 237
**31 Caliber Cartridges**
7.62x39mm Russian ..... 239
7.62x54Rmm Russian ..... 241
7.65mm Argentine Mauser (7.65x53mm) ..... 243
303 British ..... 245
**32 (8mm) Caliber Cartridges**
32-20 Winchester (32 WCF) ..... 247
32 Winchester Special ..... 248
8mm Mauser (8x57mm JS) (7.9 x 57mm) ..... 249
8mm Remington Magnum ..... 251
**33 Caliber Cartridges** ..... 253
338 Winchester Magnum ..... 253
340 Weatherby Magnum ..... 254
338 Remington Ultra Mag ..... 255
338-378 Weatherby Magnum ..... 257
**34 Caliber Cartridge**
348 Winchester ..... 259
**35 Caliber Cartridges**
9mm Luger (9mm Parabellum) ..... 260
357 Magnum ..... 262
35 Remington ..... 264
358 Winchester (8.8x51mm) ..... 266
35 Whelen ..... 268
**37 Caliber Cartridges**
38-55 Winchester ..... 270
375 Winchester ..... 271
375 H&H Magnum ..... 272
375 Remington Ultra Mag ..... 275
378 Weatherby Magnum ..... 277
**40 Caliber Cartridges**
40 Smith & Wesson ..... 279
40-65 Winchester ..... 281
40-70 Sharps Straight ..... 282
**41 Caliber Cartridges**
416 Rigby ..... 283
416 Weatherby Magnum ..... 284
416 Remington Magnum ..... 285

# Table of Contents


**44 Caliber Cartridges**
44-40 Winchester (44 WCF) ..... 286
44 Remington Magnum ..... 288
444 Marlin ..... 290
**45 Caliber Cartridges**
45 Colt ..... 292
45-70 Government
(For 1873 Springfield) ..... 294
45-70 Government
(For 1886 Winchester & 1895 Marlin) ..... 297
45-70 Government
(For Ruger No. 1 & No. 3 only) ..... 299
450 Marlin ..... 302
45-90 Winchester ..... 304
45-100-2 5/10 (45-100 Sharps) ..... 305
45-110-2 7/8 (45-110 Sharps) ..... 306
45-120-3 1/4 (45-120 Sharps) ..... 307
458 Winchester Magnum ..... 308
460 Weatherby Magnum ..... 310
**50 Caliber Cartridges**
50-70 Government ..... 311

**Handgun Data**

**25 Caliber Cartridges**
25 Automatic (25 ACP) ..... 312
**30 Caliber Cartridges**
30 Luger ..... 313
7.62 Tokarev/30 Mauser ..... 314
**32 Caliber Cartridges**
32 Automatic (32ACP) ..... 315
32 Smith & Wesson Long ..... 316
32 H & R Magnum ..... 317
32-20 Winchester (32-20 WCF) ..... 319
**38 (9mm) Caliber Cartridges**
380 Automatic (380 ACP, 9mm Kurz) ..... 320
9mm Luger (9mm Parabellum)(9x19mm) ..... 322
38 Super Auto ..... 325
9 x 21 mm ..... 328
357 SIG ..... 330
38 Smith & Wesson ..... 332
38 Special ..... 333
357 Magnum ..... 336
9mm Makarov ..... 339
**40 Caliber Cartridges**
38-40 Winchester ..... 340
40 Smith & Wesson ..... 341
10mm Automatic ..... 344
**41 Caliber Cartridges**
41 Remington Magnum ..... 347
**44 Caliber Cartridges**
44-40 Winchester (44 WCF) ..... 349
44 Special (44 S&W Special) ..... 350
44 Remington Magnum ..... 352
**45 Caliber Cartridges**
45 Automatic (45 ACP) ..... 355
45 Auto Rim ..... 358
45 Colt ..... 360
454 Casull ..... 362
**475 Caliber Cartridges**
480 Ruger ..... 364
**50 Caliber Cartridges**
50 Action Express (50 AE) ..... 365

**T/C Contender & Encore Data ..... 366**

**22 Caliber Cartridges**
22 Hornet ..... 367
223 Remington ..... 369
22-250 Remington ..... 371
243 Winchester ..... 372
25-06 Remington ..... 373
270 Winchester ..... 374
7-30 Waters ..... 375
7mm-08 Remington ..... 377
30-30 Winchester ..... 379
308 Winchester ..... 381
30-06 Springfield ..... 383
357 Magnum ..... 385
44 Remington Magnum ..... 387
45 Colt ..... 389
454 Casull ..... 391
45-70 Government ..... 393

**6. Reference Section ..... 395**

**App. A. Bullet Type Abbreviations ..... 396**

**App. B. Useful Formulas for Reloaders ..... 397**

**App. C. Shell Holder Charts ..... 399**

**App. D. Relative Burn Rate Chart ..... 402**

**Reloading Tables (Log One) ..... 403**

**Reloading Tables (Log Two) ..... 404**

# Editor's Forward

"This reloading handbook, our 48th Edition, is the finest Lyman has produced to date". From the very first day that we began work on this edition, it was our goal to make this statement a reality.

This was no small task or goal as the history of Lyman and Ideal handbooks spans a time frame of over 100 years. In our new handbook, we wanted to combine the best features of the past with all new information and data. In this book we have continued many of the popular features that made our past editions famous. Foremost of these is the tradition of using a variety of component brands. In our data you will find jacketed bullets made by Barnes, Hornady, Nosler, Remington, Sierra, Speer, Swift and Winchester. As with all of our previous handbooks, our cast bullet data is the most complete that can be found. Popular brands of powder used are Accurate, Alliant, Hodgdon, IMR, VihtaVuori and Winchester. A feature that we have returned to our data pages due to demand from our customers is the listing of Accuracy Loads.

Staying with our data section, a new feature appearing for the first time is the listing of ballistic coefficient and sectional densities for all bullets (jacketed and cast) used in our data. This will be a great aid for the many reloaders with ballistic computer programs. Our data section includes all the popular new calibers available at the time this handbook was printed, such as Remington's 7mm, 300, 338 and 375 Ultra Mags; Remington's 7mm and 300 Short Action Ultra Mags; and Winchester's 270, 7mm and 300 WSM calibers. The 450 Marlin also makes its first appearance in a Lyman handbook. To go along with these powerful new calibers, we have used many premium grade jacketed bullets such as Swift and

Nosler/Winchester's Combined Technology. This will produce outstanding load combinations for the reloading hunter. We have included smokeless powder data for a number of the now popular black powder cartridges such as the 40-65, 40-70, 45-90, 45-100, 45-110, and 45-120 calibers. On the handgun side, we have data for the 357 Sig and the powerful, new 480 Ruger. Overall, we have completed one of the most extensive reviews and re-shoots of the entire data section ever performed.

On the editorial side of this handbook, we have again used our old friend Ed Matunas to ably guide the reloader though all the basic reloading steps and procedures covered in chapters one through nine. This is the fourth handbook in recent years that Ed has worked with us on, in addition to several other handbooks he edited during his years with Lyman in the 1960's. While Ed is now retired from gun writing, we were happy that we could get him away from hunting and fishing long enough to again be part of the newest Lyman handbook.

Bryce Towsley makes his first appearance in a Lyman handbook and expertly writes on the subjects of reloading for accuracy, internal ballistics and external ballistics. Bryce is best known as Field Editor for the NRA's American Rifleman magazine. He also has written articles for many other magazines and has authored several books of his own.

Paul Matthews writes on reloading the 45-70 for accuracy. Paul has written eleven of his own books, including one devoted entirely to the 45-70 cartridge. In addition, he has authored many articles for such well-known publications as Gun Digest and Shooting Times magazine. Paul is also well known for his expertise in black powder cartridge reloading and is an avid and winning black powder cartridge silhouette shooter.

Butch Fisher, the inventor of Butch's Bore Shine cleaning solvent, contributes an article on the subject of barrel care and cleaning. Butch is an avid and well-known bench rest shooter who builds many of his own match winning rifles. Few can speak more authoritatively on the often overlooked and misunderstood topic of barrel care and cleaning.

The 48th Edition Reloading Handbook that you are now reading is the result of over three years work and many thousands of rounds assembled and fired by our handbook staff. We like to think that we have reached our goal of producing the best Lyman handbook ever. We certainly hope that you agree. If so, please tell your fellow shooters and reloaders about it. If not, then please tell us. As always, the Lyman staff encourages your comments and suggestions on how to improve upon this and other Lyman publications.

# Section 1

Chapter One:
Why Reload? . . . . . page 12

Chapter Two:
Getting Started Safely . . . . . page 14

# 1 Why Reload?

The reloading of ammunition is undertaken by individual shooters for many reasons. If you shoot frequently, or want to, the first reason for getting started can be money saved. Depending upon the caliber you reload and the type of components used, you may save from 20 to 70%, with the average cost savings being 50%. For a fixed expenditure, this means the you can shoot twice as often as when using factory ammo. Yes, there is a cost for getting started, perhaps averaging about $350.00 for quality, long lasting equipment. However, it takes only about two dozen boxes of ammo (again dependant on caliber and load used) to recover this expense. At this point your equipment has cost you nothing and thereafter every round fired represents a substantial savings. Shooters using cast lead bullets can increase savings to as much as 85% of the cost of factory loaded jacketed bullet ammo.

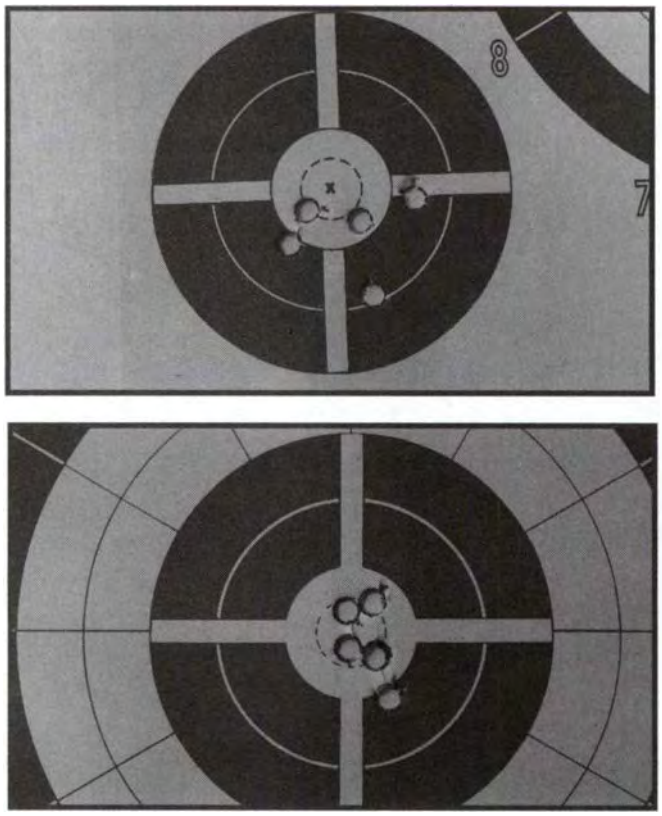

*Accuracy is one of the most important reasons to reload. The target on the top was shot with factory ammunition. The target on the bottom was shot with the same firearm and bullet weight using reloads.*

One of the reasons for substantial savings is that the fired case represents a large portion of the cost of a loaded round. A reloader can reuse the fired case many times. Dependant upon the caliber, load specifications, and firearm type, a case may be reloaded from 3 to as many as 15 times. Based on input from countless thousands of reloaders, on an average fired cases are reloaded about 6 times. However, when cases wear out, there is no reason to purchase new ammo. Simply buy new unfired cases. These are available from a great many component outlets and when purchased in bulk quantities are rather inexpensive.

Another reason for reloading is increased accuracy. Factory ammo seldom matches the accuracy of carefully developed and assembled reloads. The best proof of this is to look at the sport of benchrest shooting. Benchrest shooters do not consider themselves competitive unless they can put 5 bullets into a 100-yard group which, when measured from center to center of bullet hole, must be less than 0.250". To be among the best, benchrest groups must often be half this size. What kind of ammo do these folks use? It is 100% reloaded by themselves.

Long range varmint hunters are another group that demand great accuracy. Hitting a tiny prairie dog at 400 yards isn't easy. Again, the choice of ammo is nearly 100% reloads.

*The author has great trust in the accuracy, reliability and performance of his reloads. Ed took this cape buffalo with a reloaded 400 grain solid fired from his 416 Rigby.*

Big game hunters who pursue animals that must be shot at very long ranges, and who do some actual practice shooting, will find that many factory loads do not perform at a level to make such shooting practical. Ammo that may as easily miss as hit, or even cripple game, is not what a true sportsman wants. Reloads are often the solution to making reliable long range hits. When hunting big game, nothing will give you more confidence for a shot from this canyon rim to that canyon rim than using a reload with which you are thoroughly familiar.

*Reloading your own ammo can be very rewarding with many benefits, some of which are money saved, increased accuracy, and better marksmanship.*

Despite what you may have heard to the contrary, sufficient experience with factory ammo will quickly show that it is difficult to get consistent 5-shot 100-yard groups that measure 2". Even beginning handloaders quickly learn that all groups, firearm and shooter so capable, can be under 1-1/2" and frequently down to 1". With well tuned firearms, loading to benchrest accuracy is no special feat; albeit there are a few extra handloading steps commonly employed when assembling ammo for sub minute-of-angle shooting.

The accuracy difference between factory ammo and handloaded ammo is such that most who start reloading to save money would continue to do so, regardless of cost. Still another reason to reload is the hobby aspect. Assembling ammo during leisure time can be a lot of fun. There is a sense of pride that comes from firing match winning scores, or taking game, with ammo that you assembled yourself. Increased firearm and ammunition knowledge is another benefit of reloading. Striving for better and better ammo performance will lead the reloader to countless new materials on the topic. Many serious reloaders eventually become local "gurus" on guns and ammo.

There are many other reasons to reload. Nonetheless, we caution that the undertaking of ammo assembly requires a very mature level of thinking and safety awareness. If you are willing to read all of the instruction material in this book and to follow all cautions, then you have what it takes to get started. Remember, part of being a safe and sane reloader is to review this material from time to time.

# 2 Getting Started Safely

Some folks getting started in reloading find it confusing. It need not be so. The short answer to the basic question of how to start is as follows. First: read all the material in sections 2 through 4 of this handbook. Second: Review the data for the cartridge you wish to reload. Third: select a bullet weight, an appropriate powder and the required primer size. Fourth: follow the suggestions in this chapter for the basic tools you will require. Finally: from all this information make a list of the items you will need and you are ready to go shopping.

Nonetheless, if you are to be a safe and sane reloader you may wish to know the long answer to the question, "How do I safely get started to assemble ammo?" Several aspects required in becoming a safe reloader cannot be purchased at the local gunshop. Most important is a good supply of common sense. Not everyone who drives is qualified to be a auto mechanic and not everyone who shoots is qualified to be a reloader. However, it is reasonably easy to develop the necessary skills and attitude to be a safe reloader.

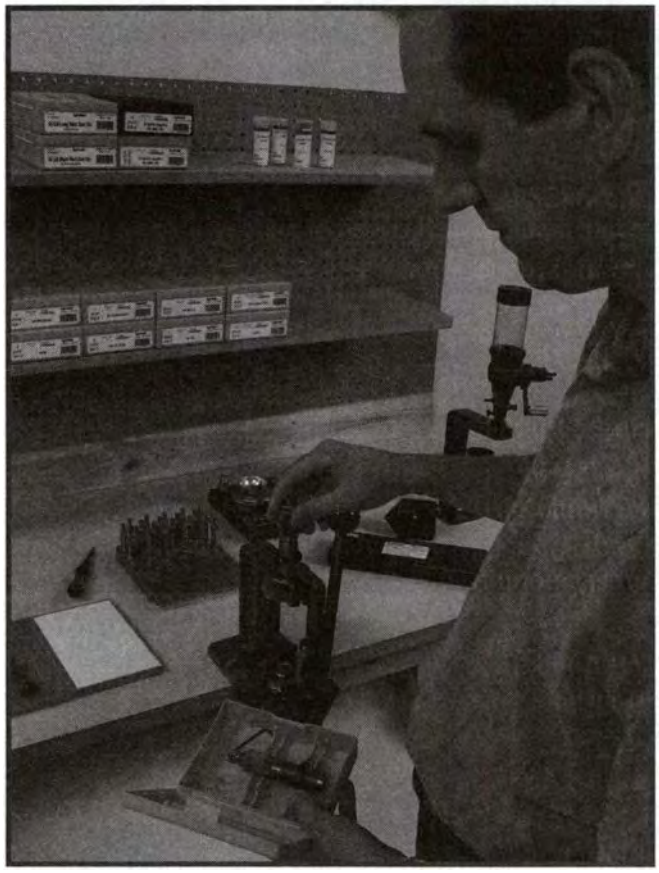

*All shooters who can read, use common sense, and adhere to all the basic safety principles can become a proficient reloader.*

An appropriate place to reload is another important consideration. You will require a place free from all distractions. Included among the potential distractions are radios, TVs, kids, phones, pets and a host of other items that could possibly divert your attention from the task at hand. To prevent accidents, when assembling ammo you must be able to give undivided attention to what you are doing.

The work area chosen should have adequate lighting and a suitable bench. Apartment dwellers can convert a closet to include a bench and the necessary storage space. A basement or seldom used room can also provide the basis for a suitable reloading area. Powder and primers will require safe, lockable, remote storage (more on this in the chapters dealing with components). Do not overlook potential problems such as heavy objects stored in such a manner that they could fall onto the work area and perhaps cause ignition of primers or powder.

You must follow the recipes of reloading - the data listings - exactly. This is a basic requirement. If you think published data is deliberately kept extra safe and therefore you can develop loads that use powder charges heavier than the listed maximum loads, or that you can interpret data for unlisted powders and bullet weights, then we suggest you find a different hobby.

There is never a justification for random experimentation when loading ammunition. If you cannot respect the wisdom, judgement and testing of the ballistic laboratory then you are not a candidate for reloading. It is sometimes reasonable to wish to substitute one brand of bullet for another or to want to use a different brand primer. However, such changes must always be approached with extreme caution. When doing so the load must be worked up carefully. Always remember that any change in components, procedures, or loaded round dimensions will create a measurable change in ballistics. The direction of this change is not predictable and therefore all changes require extreme caution and very careful load development.

Your first reloading efforts are best directed at duplicating the factory ammo you have been using. Start with a bullet weight that duplicates your favorite factory load. If you do everything right, you will notice an immediate improvement in accuracy.

Later, you may wish to assemble ammo for a specific purpose not well served with factory cartridges. For example, you may want to assemble an off-season varmint load for a thirty caliber big game rifle or a highly accurate target load. This is fine, but wait to do so until you have gained a bit of experience.

To insure continued savings and accuracy, the reloader should purchase the most durable equipment that can be afforded. Equipment that fails to perform as hoped will quickly need to be replaced. If you start with tools and accessories that will provide many thousands of loaded rounds of ammunition, you will never regret your purchase.

Your initial purchase need not include every conceivable accessory. You already have at least one of the basics - a reloading manual. For a good beginning you will need to equip your loading bench with a number of other specific basic items. To omit any one of them is to insure a less than 100% safe reloading operation. The essential items are as follows.

## Basic and Essential Loading Equipment

1. Up-to-date Loading Manual
2. Reloading press
3. Shellholder
4. Reloading die set of appropriate caliber
5. Case lubricant
6. Case lubricant pad Note: items 5 and 6 are not required when using a carbide die with some handgun calibers.
7. Safety glasses (especially for priming)
8. Priming unit
9. Primer tray
10. Powder scale (graduated in grains avoirdupois)
11. Powder trickler
12. Powder funnel
13. Two loading blocks
14. Dial indicating caliper (graduated in 0.001" increments)
15. Case trimmer with pilot
16. Deburring tool

A brief discussion of each listed essential tool is appropriate at this point.

*The first basic tools include a press, shell holder and die set.*

### 1. Reloading Manual

Remember that all data sources become obsolete. The ballistic characteristics of specific components can and do change over time. It is possible for a component to undergo a substantial change without a name change. Thus, data changes with the passage of time. Failing to keep your data up to date can bring on serious consequences.

Data tables are only a part of the knowledge needed to assemble safe ammunition. Take the time to read all of the instructional material in each manual update. Then reread it from time to time as a refresher.

### 2. Reloading Press

The press selected is the foundation for the loading bench. A good beginning is to select a single station press having a "O" shaped frame, such as the Lyman Crusher II. This type tool offers precise alignment of dies and shell holder as the die station hole and shell holder ram hole are machined in line. Such tools will generally offer a lifetime of use. Lesser priced tools are available for the shooter on a tight budget.

It is often advantageous to purchase the reloading press as part of a packaged kit. Such kits include many of the essential items needed at a substantial savings when compared to buying each item individually.

### 3. Shellholder

The shellholder allows the cartridge case to be aligned with, pushed into, and withdrawn from the various dies. One shell holder may serve for several cartridges. For example, a 30-06 shell holder is also correct for use with calibers 22-250, 243, 25-06, 270, 308 and many others. Be sure to use the correct shell holder or the case rim may tear off during resizing. This will leave the case jammed in the die, a very difficult situation to correct, and one best handled by the die manufacturer.

### 4. Reloading Die Set

A die set may consist of two, three, or four separate dies. The first die is a resizing die designed to return the fired and expanded case back to factory dimensions. This die also usually removes the fired primer. Without appropriate resizing, fired cases may fail to rechamber. For beginning, as well as most advanced efforts, we suggest the purchase of a full length resizing die set. Most die sets are caliber specific.

Note: For many straight walled handgun cartridges, the use of a carbide sizing die will eliminate the need to apply sizing lubricant to the case and to remove the lubricant after sizing. This is a great time saver and prevents jammed-in-the-die cases due to improper lubrication.

**WARNING:** Never attempt to resize a loaded round.

Sizing dies for bottleneck cases include a spindle mounted expanding button which opens the case neck to a dimension suitable to properly accept and hold the bullet. Straight walled cases must be neck expanded in a separate die. This means that all straight case die sets have an extra die.

The bullet seating die, seats the bullet to the correct depth (adjustable). When required it can also crimp cases to bullets. A crimp is necessary for ammo used in most revolvers and in guns with tubular magazines. Ammo for use in pump or semi-automatic rifles is also normally crimped. Some shooters find crimping to be more precise if done separately from bullet seating. Thus, an extra die is sometimes used. Most bullet seat/crimp dies use a roll crimp. However, taper crimp dies are used for reloading of cases which headspace from the case mouth.

### 5. Case Lubricant

For all reloading efforts (except when using a carbide die for straight walled handgun cartridges), cases need to be lubricated before resizing. Failure to do so will result in a case hopelessly jammed in the resizing die.

### 6. Case Lubricant Pad

The proper method of applying lubricant is to use a lubricating pad to transfer sizing lubricant to your cases. As an alternative to using a pad you may purchase Lyman's Qwik Spray Case Lube.

### 7. Safety Glasses

Should an accident occur, this essential item can save your eyes from injury, especially when priming.

### 8. Priming Unit

Priming units are also called priming punches, priming rams, or priming arms. All loading presses are equipped with basic priming units that accomplish the task of seating new primers. With these, the primer is often seated as the sized case is withdrawn from the resizing die (or in the case of a straight walled case as it is withdrawn from the neck expanding die). However, it is suggested that the shooter interested in maximum primer seating uniformity will do best to replace such standard priming units with one of the Ram Prime systems.

*Case lubricant and a lubricating pad are essential for all case resizing except when using a carbide die for resizing certain straight walled pistol cartridges.*

Ram Prime units are mounted at the normal die station and can be adjusted to give a very uniform primer seating depth by using the press stroke stop as a means to control primer insertion depth.

### 9. Primer Tray

A primer tray is used to orient all primers one side up so as to insure that, as each one is picked up and placed into the primer post, it is correctly oriented. It will also help keep primers free from any contami-

*There are many styles of priming units available, but the ram prime unit shown is one of the best units for seating primers to a uniform depth. The primer tray will allow rapid orientation of primers and keep them safely in place on the bench.*

nants.

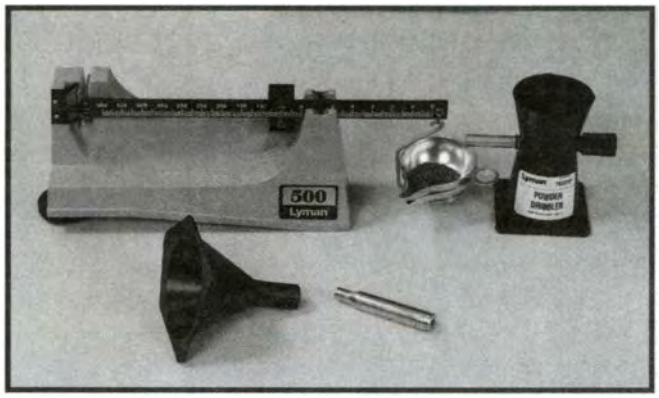


*Each powder charge should be carefully weighed on an appropriate powder scale. The powder trickler will allow you to carefully add the last several granules of powder when bringing the propellant charge to exact weight. The funnel is used to pour the powder into the cartridge case.*

**10. Powder Scale**

To insure the precise amount of powder is placed into each case, each powder charge must be carefully weighed. A powder scale is also required for the correct adjustment of any accessory powder measure.

**11. Powder Trickler (aka Dribblers)**

These make the job go quickly and accurately. The trickler adds powder, one granule at a time, to the scale pan in order to bring a propellant charge to exact weight. Powder tricklers are available in hand turned models for about a ten dollar bill or in the superb electric vibrator types for about forty dollars.

**12. Powder Funnel**

Without a powder funnel there is no practical way to get propellant from the scale pan into the case. A simple but effective funnel will work with cases as small as 22 caliber and as large as 45 caliber.

**13. Loading Blocks**

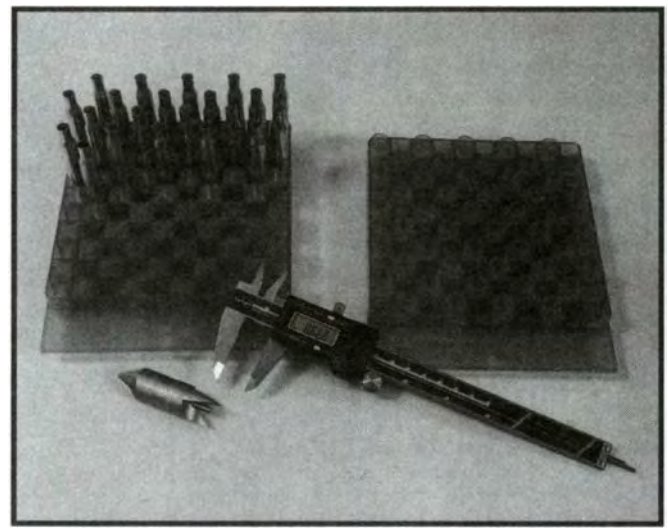

*Basic and essential tools include two loading blocks, digital caliper, and a case deburring tool.*

Loading blocks hold the cases on the bench in an organized manner. Always use two loading blocks. Cases are picked up, a loading step performed and then they are placed in the second loading block (positioned on the opposite side of the loading tool).

**14. Dial Indicating or Digital Caliper**

This tool allows the reloader to measure the depth of seated primers, to check case lengths before and after trimming, to maintain an appropriate cartridge overall length and to discover the source of many difficulties. Calipers are available as inexpensive plastic types or stainless steel models that sometimes outlast the reloader.

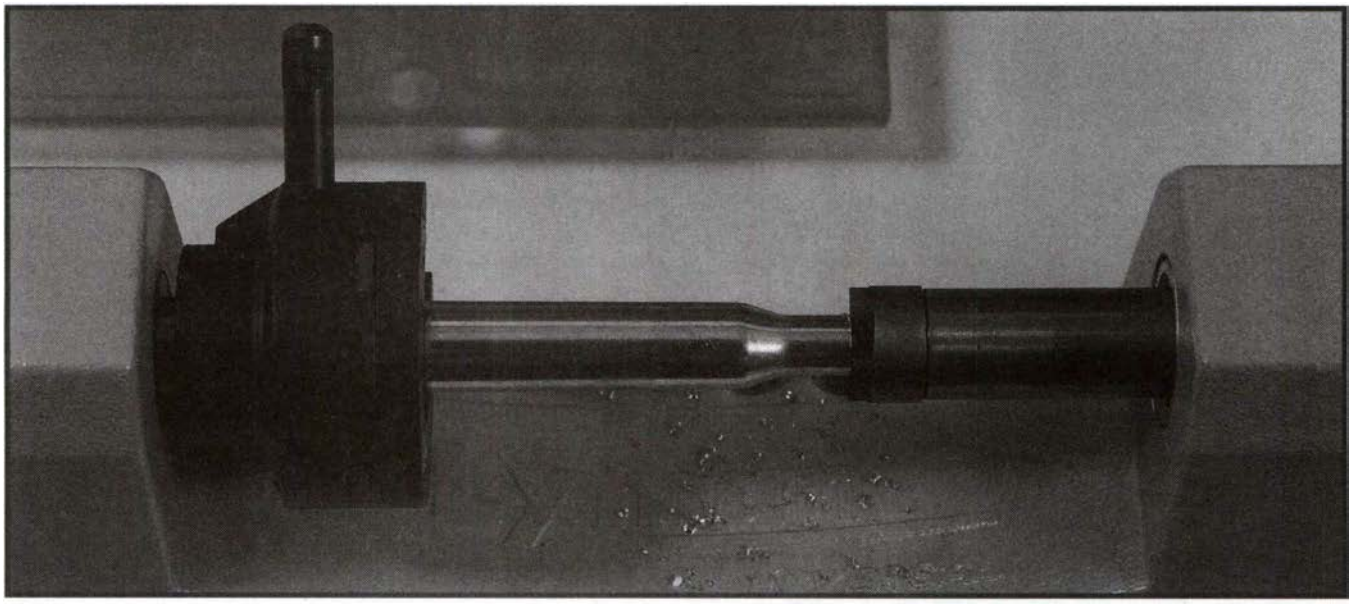

*Trimming cases is essential to insuring safety, reliability and accuracy of your reloads.*

### 15. Case Trimmer

Cases stretch when they are fired. Case bodies are often shortened when resized but their necks tend to stretch during this process. After a single firing and sizing, a case may stretch past the point of being suitable for reloading. Under some circumstances, a case may be reloaded and fired four or five times before its length exceeds the maximum allowable dimension. In any event, there will always be a point at which the case must be trimmed back to a workable dimension before it can be reloaded. Trimmers require the use of a pilot of appropriate caliber to keep cases positively aligned during the trimming process. Some case trimmers require the use of an appropriate shell holder.

### 16. Deburring Tool

During trimming, burrs form on the inside and outside of the case mouth. A deburring tool quickly gets the case smooth and ready for reloading. Cases should be deburred for the first reloading,especially inside the case mouth, even if they are not trimmed.

The cost of getting set up with the necessary essential tools will vary depending on where the equipment is purchased and exactly what model tools are selected. The return on the initial investment can be rapid or slow depending upon how often you shoot.

You will require a supply of primers, powder and bullets to begin reloading. The cost of these will vary dependent upon the caliber and the type of ammunition you want to assemble.

## Additional Accessories

There will come a time when you may wish to add to your basic tools. Accessory items can help improve accuracy, or make the loading process faster. Some of the more useful accessories include the following:

### 1. Powder Measure And Optional Stand

A powder measure allows the reloader to dispense a near exact powder charge rapidly. Because charges thrown from a measure will vary, powder measures must be used in conjunction with a scale. To do so, adjust the measure to throw a charge slightly below the desired nominal. Set the measure so that no individual charge will be over the desired weight - it is nettlesome to try to remove excess propellant from the scale pan. Then, meter a charge directly onto the scale pan. Return the pan to its hanger on the scale and bring the charge into exact balance by adding the last few granules of powder with a powder trickler.

### 2. Primer Pocket Cleaner

After decapping, inspection of the primer pocket will reveal a hard, crusty, black deposit. If allowed to build to excessive amounts, this deposit can interfere with uniform primer seating and thus cause inaccuracy. A high primer can also be a potential hazard. This deposit is easily removed with a few twists of a primer pocket cleaner.

### 3. Case Cleaning Equipment

A dull looking case is no consequence. A dirty case, however, may keep a defect from being noticed or scratch reloading dies and/or chambers requiring premature die/firearm replacement.

Cases can be cleaned by hand, however, a case tumbler can make some mighty dirty brass look like new. Case tumblers are available to fit almost every need with respect to the quantity of cases to be processed and cost.

### 4. Scale Check Weight Sets.

Scales are delicate instruments. Should a scale be inadvertently subjected to some undue rough handling, a scale check weight set can help determine if the scales accuracy has been compromised.

### 5. Turret Presses

Turret presses have multiple die stations. The advantage is that a reloader can place a case into the shell holder and fully load it, by rotating each die into position. This speeds up loading and is a method sometimes favored by handgun cartridge reloaders.

Turret presses also allow the reloader who loads cases by the preferred batch method (performing the same operation on all of the cases to be loaded before moving on to the next step) to set up all the dies and leave them in position on the press. This eliminates the need to repeatedly remove and replace dies.

### 6. Case Neck Turning Equipment

In order to obtain better accuracy, serious accuracy buffs (such as benchrest shooters and varmint hunters) often turn the outside of case neck to make it concentric with the inside.

Neck turning is essential when making cartridges fit chambers with undersized necks often used in custom benchrest rifles. Neck turning operations are generally best left alone until after acquiring an in-depth amount of reloading experience.

### 7. Flashhole Uniformer

This little handheld reamer will remove the burr at the terminus of the flash hole. This is an accessory that originally saw use with serious bench rest shooters. Today, in their search for accuracy many handloaders feel it worthwhile to deburr flash holes.

### 8. Primer Pocket Reamer

Primer pocket reamers are required to remove the crimped material from military and some para-military style cases. Such cases have the primer locked into place by an impact-shifting of case head brass around the end of the primer pocket. It is best to use a special heavy-duty decapping rod assembly to remove crimped in-place primers. After removing fired primers from such cases, a new primer cannot be safely or correctly seated until a reamer is used to remove the crimped material.

### 9. Primer Pocket Uniformer

A primer pocket uniformer is used by many shooters to insure that the bottom of every primer pocket is flat. The benefits of this additional effort generally cannot be realized until groups are at or below 1/2 inch at 100-yards. It requires care to avoid overcutting the primer pocket. Removing too much material can cause gas leaks at ignition. Such leaks can quickly ruin a bolt face and are potentially dangerous. Obviously primer pocket uniforming is therefore not for everyone.

*These accessories, and many others, can help make reloading faster, easier, and more accurate. When and if each item will fit in with your reloading will become self evident as you gain experience.*

### 10. Automatic Electronic Powder Scale

While not inexpensive, this accessory can simplify the process of powder charge weighing. At a push of a button the electronic scale automatically feeds powder onto the scale pan, first at a fast rate and then at a greatly slower rate to bring the scale into balance. Once started it is a hands-off operation.

As time goes by, the reloader will find that the list of other available accessories appears near endless. Let real needs or personal goals dictate which ones should be on your loading bench.

Getting started requires only the previously discussed sixteen basic items. Indeed, one could happily load hundreds-of-thousands of rounds with only a few additional accessories - a powder measure and primer pocket cleaner being the most likely candidates. From this point on, it should be obvious when you will actually benefit from an addition to your basic tools. Lacking an obvious need, chances are you will get along nicely without further additions.

The how-to of component selection is covered in the following appropriate chapters of this manual.

# Section 2

Chapter Three:
Reloading Rifle Cartridges . . . . . page 22

Chapter Four:
Reloading Handgun Cartridges . . . page 32

# 3 Reloading Rifle Cartridges

As mentioned previously, the mechanics of each reloading step are quite simple. However, there are several important considerations to be given to each step. Observing these considerations will help ensure that all ammo assembled is safe, will function reliably, and be accurate. Some of these considerations are dealt with in following chapters and in several of the cartridge comments immediately preceding specific loading data. This information is important and must be read and understood before actually beginning to assemble ammunition.

The following step by step description deals with assembling fired bottleneck (shouldered) cartridges with jacketed bullets intended for use in either rifles or handguns. Slight deviations from these steps are required when reloading ammo with lead bullets, for rifle or handgun cartridges having a straight case (no shoulder), or when loading new unfired cases. These variations are discussed at the appropriate points in the following text.

Reloading a fired cartridge generally requires 13 basic steps. The sequence or actual number of these can vary depending on the specific equipment used and reloader preference. The sequence we have chosen is based on the method most often favored by knowledgeable handloaders and our selection of tools used to illustrate the process. Again, not every step is always required, as we will indicate.

The thirteen steps to reload jacketed-bullet bottleneck cartridge ammo are as follows:

1. Selection of load and components to be used.
2. Case inspection.
3. Case cleaning.
4. Inside neck brushing
   (not required when using new unfired cases).
5. Case lubrication
6. Case resizing and fired primer removal
   (not required when using new unfired cases).
7. Lubricant removal
8. Case length measuring.
9. Case trimming and deburring
   (not always required).
10. Seating new primer.
11. Powder weighing and charging.
12. Bullet seating and if required crimping.
13. Final inspection.

**CAUTION:** Be sure to read all pertinent material before actually beginning to assemble ammo.

## STEP ONE

### SELECTING A LOAD AND COMPONENTS

At first, the selection of components may seem a difficult and confusing task. This is especially true if a general knowledge of basic ammunition details has not yet been acquired. Nonetheless, you soon will find that component selection quickly becomes an easy and fun part of reloading. The learning process can be hastened along by developing as much ammo knowledge as leisure time reading will allow. Thousands have found Lyman's Guide to: BIG GAME CARTRIDGES AND RIFLES a good book for enhancing ammo knowledge, especially with regards to bullet selection.

### Selecting Cartridge Cases

The selection of fired cartridge cases, or new brass, presents no special challenge. If you have saved your fired cases you need only separate them into specific groups by brand and lot number. Lot numbers appear on the factory ammo box. This number may be on an inside flap or the box back. Keeping brass segregated by lots will maximize accuracy potential and ballistic uniformity. If you purchase new unfired cases they must, of course, be of the appropriate caliber. Purchasing bulk packaged cases (in lots of 50, 100, or more) is the least expensive way of obtaining new brass.

**Test Components:**

| | |
|---|---|
| Cases | Winchester |
| Trim-to Length | 2.484" |
| Primers | Winchester WLR |
| Primer Size | Large Rifle |
| Lyman Shell Holder | No. 2 |
| Jacketed Bullets Used | Sierra HP #2110, 110 gr. |

*Primer size and the specific primer we used is clearly shown at the beginning of the data for each caliber.*

**CAUTION:** Never load cartridge cases from an unknown source, i.e. cases picked up at the range or sold as once-fired brass. Use only brand new brass or cases obtained as the result of firing factory ammo in your firearm. For more on cases and their selection see Chapter Five.

### Selecting Primers

The proper primer size is listed at the beginning of the data for each cartridge, for example: large rifle, large rifle magnum, small rifle. For your first loads, we suggest you use the exact primer we used for the development of our data. As an alternate, match the primer brand and correct size to the brand of the case you are reloading. Do not use magnum primers unless the data specifically calls for these as doing so can alter ballistic uniformity and the safety of the data.

Do not allow cartridge nomenclature to enter into the selection of primers. For example, the 222 Remington Magnum never requires the use of a magnum primer and the 416 Rigby always requires the use of a magnum primer. Always follow the primer size and type as listed in the data tables.

**165 gr. Jacketed Ballistic Tip** **BC:** .475 **SD:** .248
3.285" OAL

| Powder | Sugg Starting Grains | Velocity fps | Pressure P.S.I. | Max Load Grains | Velocity fps | Pressure P.S.I. |
|---|---|---|---|---|---|---|
| IMR-3031 | 44.0 | 2495 | 38,500 | 49.0 | 2784 | 56,100 |
| H335 | 43.0 | 2474 | 42,600 | 48.0 | 2690 | 54,300 |
| IMR-4895 | 45.0 | 2503 | 37,700 | 50.0 | 2815 | 56,200 |
| **IMR-4064** | 47.0 | 2495 | 38,000 | **52.0** | **2851** | **58,100** |
| IMR-4320 | 47.0 | 2542 | 41,200 | 52.0 | 2843 | 57,500 |
| RX15 | 47.0 | 2531 | 39,300 | 52.0 | 2807 | 53,600 |
| H-380 | 48.5 | 2515 | 40,100 | 53.0 | 2804 | 54,000 |
| 760 | 52.5 | 2697 | 43,500 | 57.0 | 2959 | 58,600 |
| IMR-4350 | 52.5 | 2613 | 45,100 | 57.0+ | 2878 | 56,600 |
| RX19 | 54.5 | 2464 | 37,600 | 60.4+ | 2816 | 53,300 |
| N160 | 55.5 | 2597 | 41,100 | 61.0+ | 2895 | 56,500 |
| IMR-4831 | 54.0 | 2485 | 38,400 | 59.0+ | 2786 | 52,000 |
| H-4831 | 56.0 | 2431 | 34,900 | 62.0+ | 2754 | 49,000 |
| WXR | 55.0 | 2401 | 34,200 | 61.0+ | 2720 | 47,800 |

*Selection of a propellant for your first loads is easily made by referencing the bullet weight (highlighted) you are using, the accuracy powder (highlighted), and the starting load (highlighted) as shown in the data.*

### Selecting Propellant Powders

Propellant powders are available in about 100 different types. The burning speed of each and the ballistics obtained can vary tremendously. Powders are designed to suit specific applications such as: bullet weight, case size and shape, pressure level and other specific ballistic and firearm needs. As a result, only certain propellants are suitable for specific applications. When selecting a powder for your first reloading efforts, we suggest the use of the propellant listed in our data for the accuracy load.

**CAUTION:** Always start with the exact powder charge weight shown under the starting grains column. Heavier loads should not be used until the reloader has gained some experience and fully understands proper load development.

### Selecting Jacketed Bullets

Bullet selection may at first seem confusing. To simplify the process, select a bullet weight to duplicate the factory ammo you favor. The appropriate diameter bullet may be determined from the caliber/bullet table in Chapter Eight. Many calibers use the same diameter bullet. For example: 300 Savage, 30-40 Krag, 308 Winchester, 30-06 Springfield, 300 Winchester Magnum, and others, all use a .308" diameter bullet (30 caliber).

There is another consideration when selecting bullets. The muzzle velocity of a cartridge may require a specific bullet jacket strength and construction. For example, the 30 MI Carbine uses a .308" bullet; but because of its very low velocity it requires a bullet having a very soft jacket in order to properly expand. The 30-30 has a modest velocity and it also needs a relatively soft bullet, albeit stronger than those for the 30 MI Carbine. Still other calibers require a bullet designed for a mid-range velocity bullet, for example the 222 Remington. Bullets that are ideal for this cartridge often are designated with nomenclature that suggest rapid bullet expansion, for example: Blitz, Expander, Super Explosive (SX) and so on. Often bullets for specific applications will be so marked on the package. Some examples are 22 Hornet, 30-30, 32 Winchester Special.

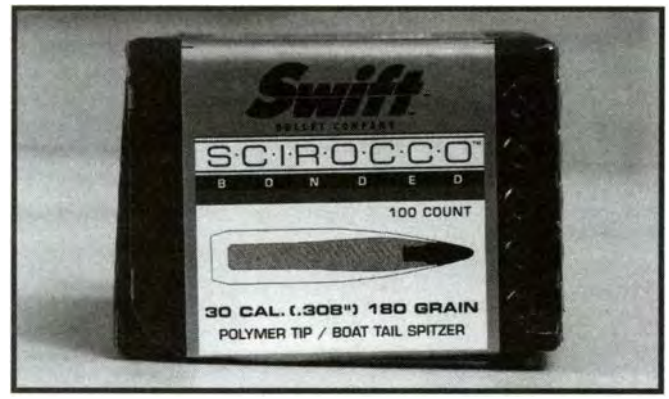


*Bullets should be selected by the desired weight and correct diameter.*

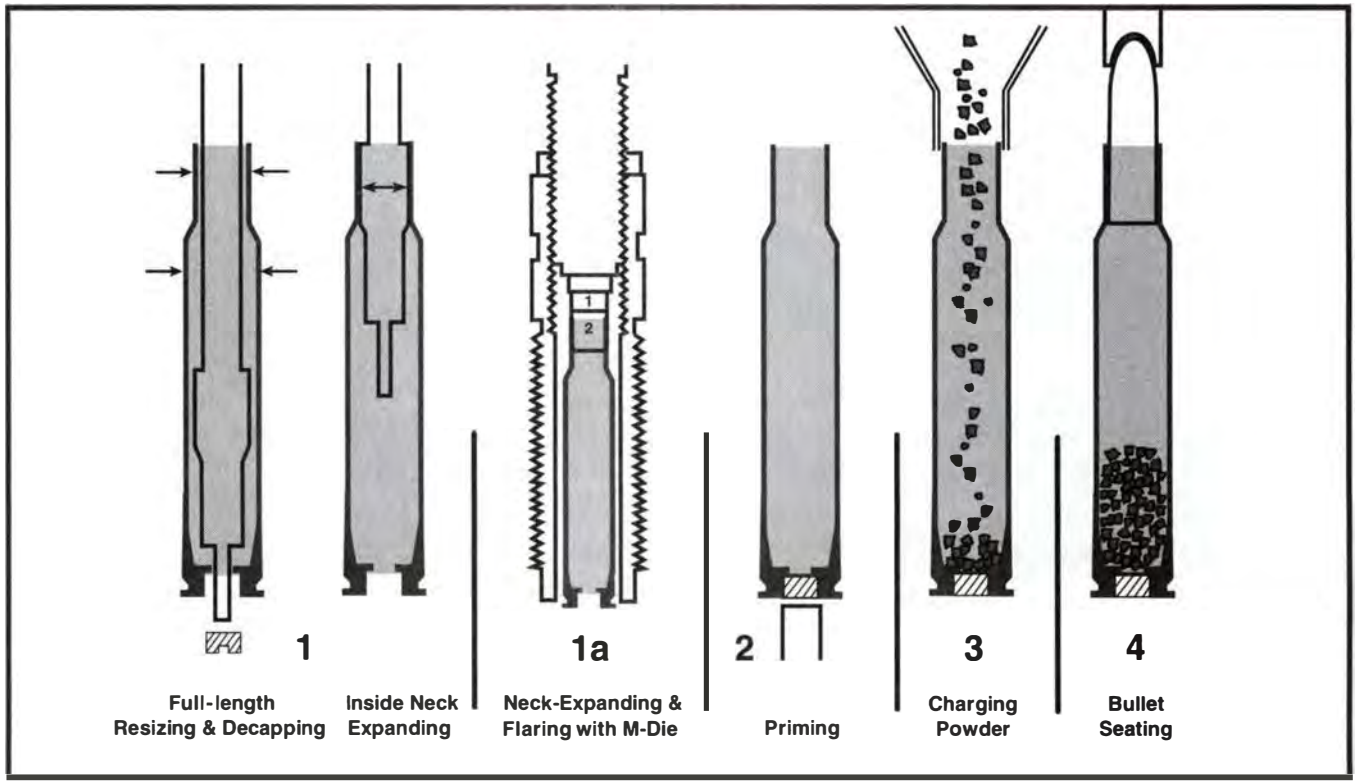


*The basic steps of rifle case reloading.*

*I. Case is sized to return its inside neck and outside body to factory-like dimensions. The fired primer is removed automatically during this operation. II. New primer is seated III. Propellant powder is weighed and placed into case. IV. Bullet seating and crimping (when required).*

All of our data specifies the bullet manufacturer's product number for each tested bullet weight. Each of the listed bullets will work fine for target shooting. However, for proper expansion on varmints or big game you will need to make certain that the bullet you select is properly designed and suitable for the velocity range of your cartridge. If you are loading for hunting, avoid the use of bullets designated as Match or Target style as these may not expand properly on game.

Often you will be able to purchase the identical bullet used in your favorite factory loads. Some of these include the Nosler Partition, Nosler Ballistic Tip, and Combined Technologies Partition Gold bullets. Many other factory bullet types are available to the handloader.

Other important bullet selection criteria are the possible need for a cannelure or the requirement for a blunt nosed bullet. These and other considerations are discussed in Chapter Eight.

As stated, Lyman's Guide To Big Game Cartridges And Rifles will help the reader with hunting bullet selection.

### THE LOADING SEQUENCE

The use of two loading blocks is suggested. As each step is performed, the case should be removed from one loading block, processed, and then placed in the second loading block. This will keep the process orderly and prevent many common bench errors.

Note: We strongly suggest the reloader follow the batch method of ammo making. That is, perform a single operation on all cases to be reloaded before proceeding to the next step.

## STEP TWO

### CASE INSPECTION

Fired cartridge cases have a finite life. Depending upon the firearm used, caliber of the firearm, internal ballistics of the load, and other considerations, it is reasonable to expect from 2 to 15 firings from each case. Six firings are average for the typical bottleneck rifle cartridge such as the 270 Winchester or 30-06 Springfield. Belted magnum cases such as the 7mm Remington Magnum, 300 Winchester Magnum and 338 Winchester Magnum typically last for only 3 firings. Low pressure cartridges fired in strong actions, such as the 416 Rigby, generally offer the greatest

number of firings. All else equal, cases fired in semi-automatic rifles will have a shorter reloading life than cases fired in bolt action rifles.

All cases reach a point when further reloading becomes unsafe. The keeping of careful reloading records and the performing of visual inspections on each case before, during, and after reloading, are essential to ensure that you use only suitably safe fired cases.

Begin your inspection by wiping each case with a cloth to remove excess fouling, dirt, and any foreign material that could scratch your resizing die or the case itself. Turn each case mouth down and tap it lightly on the bench to dislodge anything that may have entered the case after firing.

Now look for split necks or bodies, signs of incipient case separation (a bright partial or complete ring around the case at the point where the case's solid base joins the wall of the cartridge), corrosion, or burn through perforations. Also look for any signs of gas leakage around the primer pocket. Eliminate all cases with any visual defect or abnormality. (For more details refer to Chapter Five.) To prevent later inadvertent use of a rejected case, crimp its mouth shut with a pair of pliers before discarding it. Then place each case, mouth up, in a loading block.

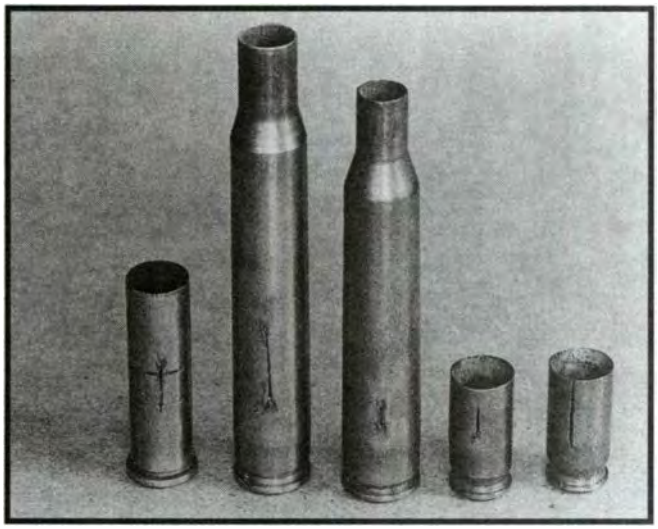

*Cases must be inspected and those with any defect must be discarded.*

## STEP THREE

### CASE CLEANING

Case cleaning is an important step to protect your reloading dies and firearm chambers. If you also want your reloads to look like new, now is the time to put all your cases into a Lyman Tumbler. Follow the instructions that come with the tumbler. After removing cases from the tumbler tap the mouth of each case on the bench to insure that no tumbling media remains in it. Then wipe each case lightly with a clean cloth.

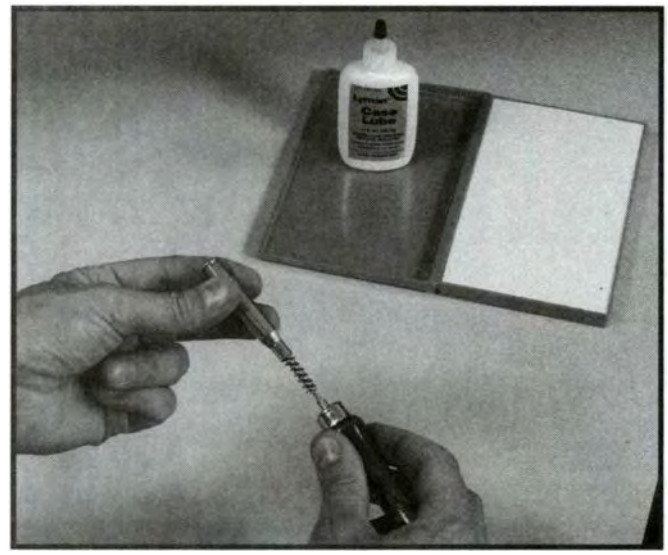

*Case neck brushing will enhance accuracy.*

## STEP FOUR

### INSIDE NECK BRUSHING

This is a step that some reloaders omit. However, it is a simple one that takes very little time and it will improve the performance of your ammunition. Brushing the inside case neck will rid it of excess firing residue, enhance the ease of pulling the expanding button through the case neck (when withdrawing the case from the sizing die) and extend the useful life of the sizing die's expanding button. It will also enhance accuracy by helping to maintain uniform bullet pull.

This operation simply involves three or four passes of a brush through the case mouth. Place the brushed case into the second loading block, mouth down, so as to allow any loosened crud to fall free of the case. To prevent the accumulation of debris in the second loading block, many reloaders tap the case mouth on the bench before placing it in the block, mouth down.

## STEP FIVE

### CASE LUBRICATION

When a cartridge is fired it expands. The expanded dimensions are not compatible with holding a new bullet with proper tension (bullet pull), and are not conducive to easy chambering. To avoid these, and other difficulties, all fired cases must be resized.

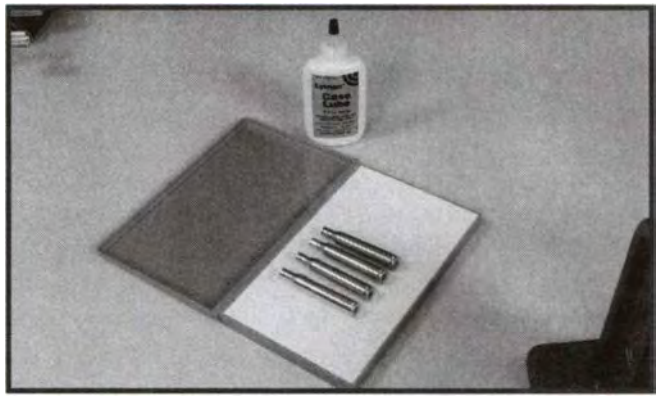

*Each case must be lubricated before it is resized.*

Roll a case lightly across your lubricant pad. Do not fail to lubricate each case or it will stick solidly in the resizing die creating a very difficult to correct problem. Do not use excessive lubricant as doing so will cause cases to dent during the resizing step. Use only enough lubricant to insure the case enters and leaves the resizing die without difficulty. Be neat. Do not get lubricant into the primer pocket or case mouth. Do not get lube on the case shoulder or it will dent, or possibly collapse, during resizing. Dipping the case mouth in mica, a dry powder lubricant, will help the expander button pass smoothly through the case neck. Place the case in the loading block mouth up.

## STEP SIX

### CASE RESIZING & FIRED PRIMER REMOVAL

Place a lubed case into the shell holder and run the case into the full length resizing die. Follow the instructions for proper die adjustment as explained in the material supplied with your die set. After the first case is resized, wipe off the lubricant with a clean cloth. Then place the case into a cartridge headspace gauge. If a die adjustment is needed, now is the time.

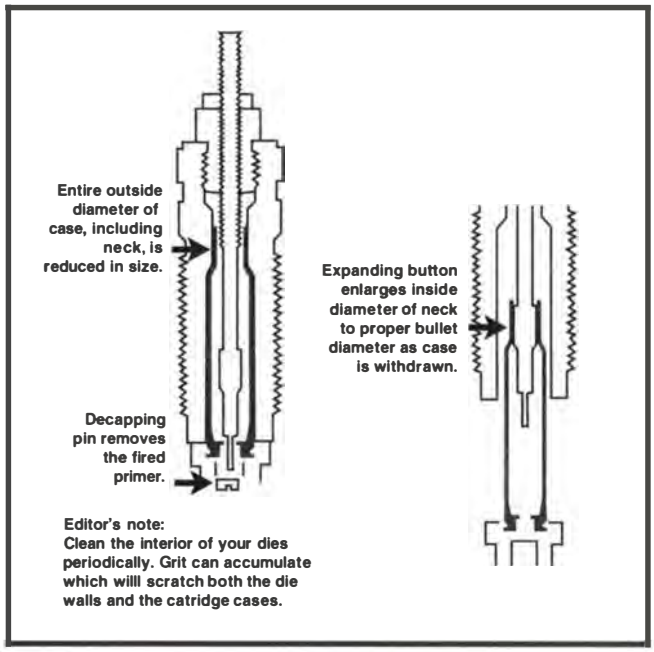


The resizing die generally is adjusted so that the shell holder, at the top of its travel, will contact the resizing die and create a slight cam action against the die. During this operation the fired primer will automatically be ejected from the case. Withdraw the case from the sizing die and place the case into the loading block, mouth down. Visually inspect each case as it is placed in the loading block to ensure the fired primer has been removed.

Note: The decapping rod should be adjusted just low enough to ensure the primer is pushed free of the case. If the decapping rod is too low it will impact the inside bottom of the case and be damaged. Proceed until all cases have been lubed and sized.

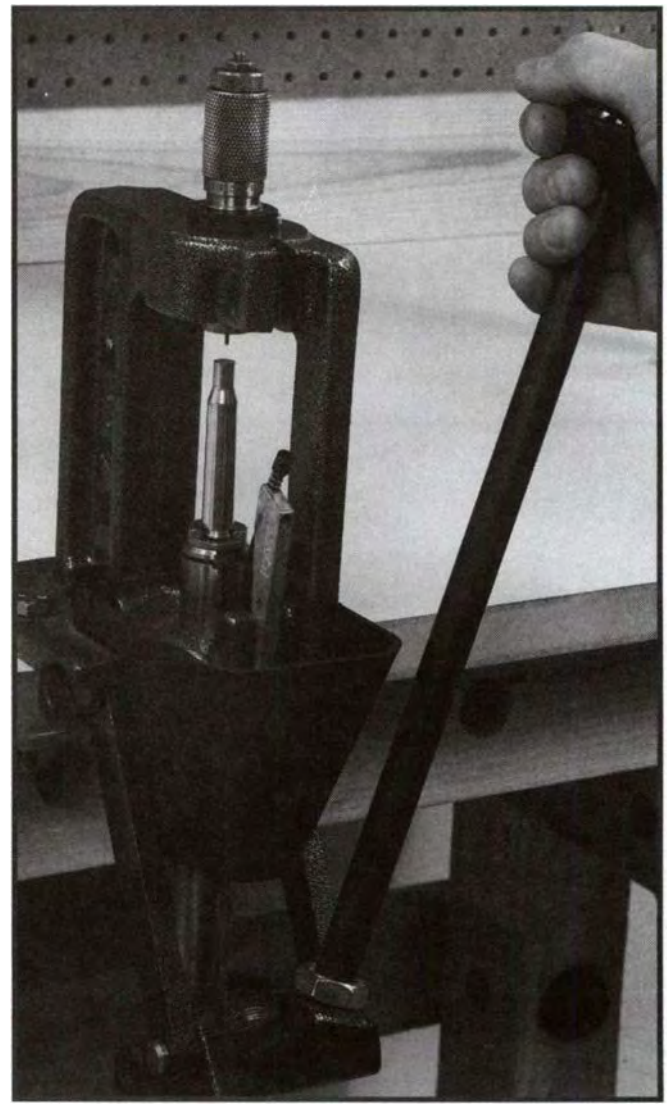

*The first die usage step of reloading requires that the lubricated case be completely run into the full length resizing die. This will return the case to factory new dimensions and remove the old primer.*

Note: In the past, varying sources have suggested that the primer be seated as the case is withdrawn from the resizing die. However, it is possible for case lubricant to contaminate and thus destroy primers. Therefore, we suggest that this is not the ideal time for primer seating.

## STEP SEVEN

### LUBRICANT REMOVAL AND SECOND INSPECTION

Carefully wipe each case with a clean cloth so as to remove all traces of sizing lubricant. Use a clean section of the cloth for each case. Next, carefully inspect the case for any flaws. Repeated case resizing and firings can cause case mouths and bodies to become brittle and split when fired or during resizing. Also watch for signs of incipient case separation (see Chapter 5). It is a good idea at this time to drop the resized case into a cartridge headspace gauge as a worthwhile inspection step. This will ensure that your sizing die is correctly adjusted to give the case the proper headspace length. Place cleaned and inspected cases in your loading block, mouth up. Should you find any defects, this is the time to discard the entire lot of cases.

IMPORTANT - Case lubricant can ruin a primer, resulting in delayed ignition or a failure to fire. To avoid potential primer contamination, this is the point to stop the reloading process and thoroughly wash and dry your hands.

SPECIAL STEP FOR STRAIGHT CASES (i.e. 444 Marlin, 45-70, 458 Win. Mag.) OR FOR WHEN USING LEAD BULLETS.

Straight cases cannot be properly neck expanded in a resizing die. Such cases must now be expanded in a special expanding die such as the Lyman M die. This extra die is supplied in all appropriate caliber die sets. If you wish to load lead bullets, the case mouth must have a two step expansion. This is also done with a M die. Follow the instructions that come with all 3 die straight case sets or with the M die when purchased as an accessory for loading lead bullets into bottleneck cases. The loading procedure for straight rifle cases and/or loading of lead bullets is the same procedure described in the next chapter for loading handgun cartridges.

## STEP EIGHT

### CASE LENGTH MEASURING

Case measuring is an important step both for safety and proper ammunition functioning. Cases stretch when fired and during the resizing step. If they become too long they will be difficult, if not impossible, to chamber. Excessive chamber pressure can also be caused by exceeding maximum case length. Therefore, each case must be carefully measured at this point. A dial indicating or digital caliper is the best tool for this process.

The data section drawing for each cartridge clearly indicates the maximum allowable length for the resized case. If one or more cases are found to be at maximum or greater length, trim all cases to a uniform length as described in the next step.

## STEP NINE

### CASE TRIMMING AND DEBURRING

As stated previously, cases must be trimmed when they exceed maximum allowable length. Additionally, case trimming is recommend whenever starting to load new or once fired brass as such cases will not be of a uniform length. Trimming cases to a uniform length will enhance accuracy and ballistic uniformity.

*Measure all cases carefully. If one or more cases are at, or over, the maximum length shown in the cartridge drawing, trim all cases to the Trim-to-length indicated in the data.*

**Test Components:**

| | |
|---|---|
| Cases | Winchester |
| Trim-to Length | 2.484" |
| Primers | Winchester WLR |
| Primer Size | Large Rifle |
| Lyman Shell Holder | No. 2 |
| Jacketed Bullets Used | Sierra HP #2110, 110 gr. |
| | Sierra SP #2120, 125 gr. |
| | Hornady SP #3020, 130 gr. |

Note: if you will be crimping cases to bullets (required for ammo to be used in semi-automatic and pump action rifles, or for ammo to be used in tubular magazines), the crimping process will be less than satisfactory if cases are not of a uniform length. Many reloaders, who crimp cases, trim after every

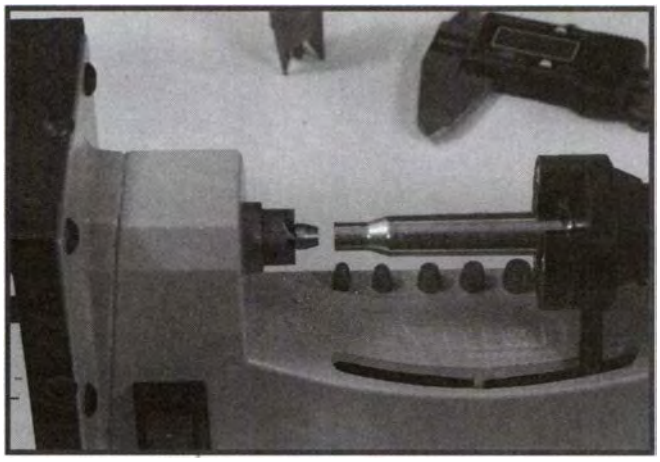

*Case trimmers are miniature lathes that quickly restore a case to a safe and accurate overall length.*

firing/resizing cycle.

The proper trim-to length for cases is clearly shown in the data for each cartridge. Adjust your trimmer according to the manufacture's instructions. When trimming, allow for some dwell time - that is for a number of rotations of the cutter after the case has been trimmed to length. This will help insure the maximum uniformity of finished lengths.

After trimming, remove the burrs (formed by the trimmer cutter) from both the inside and outside of the case mouth using a Lyman Deburring tool. A few twists of the tool is all that is needed. Do not deburr the case to a sharp edge. Tap the case mouth on the bench to dislodge any brass chips from inside the case. Place the case, mouth down, in your loading block.

**CAUTION:** The material trimmed from a case flows from the junction of the case head and wall. As brass continues to flow and is trimmed away, this section of the case becomes thinner until it reaches a point where the case is severely weakened. Therefore, never trim a case more than four times (keep careful records). When a case needs its fifth trimming it must be discarded.

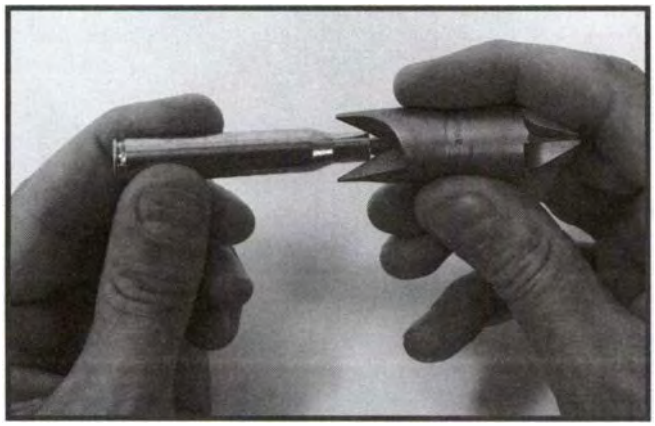

*After trimming, all cases must be lightly deburred on the inside and outside of the case mouth.*

Note: The initial trim of new cases is not counted when determining the number of times a case is trimmed as this trim is done not because of case stretch but rather to create a uniform length.

## STEP TEN

### PRIMER SEATING

While not absolutely essential, it is advisable to clean primer pockets before seating a new primer. This is a simple operation requiring only a few twists of the pocket cleaning tool. As each case's primer pocket is cleaned, place the case in the loading block, mouth up.

Bring a box of 100 primers to the bench and read the label aloud to insure that you have the correct brand and size. Then double check again. You must use the primer size and type called for in the data.

**CAUTION:** Safety glasses should be worn whenever handling primers.

*Primer seating may be accomplished in many ways and with differing tools. One of the best methods is to use a Ram Prime unit mounted in the reloading tool's die station.*

Its important to wash and thoroughly dry your hands before starting to prime. Place a quantity of primers (never more than 100 - or a lesser amount as needed) onto a primer flipper tray. Gently rotate the primer tray until all primers are anvil side up.

Most loading tools come equipped with a basic primer seating tool that primes the case at the normal shell holder position. Follow the instructions supplied with the tool. Place a primer, anvil up, into the priming post, push the post under the shell holder, and then lower the shell holder over the post to seat the primer. On many loading tools, this requires a "feel" method to seat the primer to the correct depth. Some tools will have a rudimentary stop to adjust primer seating depth.

A better method for primer seating is to use a ram-prime tool which mounts into the tool's die station. Primer seating depth then can be controlled by adjustment of the ram-prime body combined with using the press handle's solid stop at the end of the priming stroke. This method produces a very uniform primer seating depth.

Generally, primers should be seated 0.003" to 0.005" below flush of the case head - a nominal of 0.004" below flush.

**CAUTION:** Primers seated too high (above flush) are a needless hazard. It is possible that such primers can be ignited before the firearm action is closed, causing a serious accident. High primers are also prone to misfires. Primers seated too deeply (below flush) can become erratic in performance or misfire. For more details on primers see Chapter Six.

**CAUTION:** Primers are explosive and require special care in storage and handling. See Chapter Six for vital information.

Place the primed case in the loading block mouth down. When all cases have been primed, verify proper priming depth by running a finger over each case head. The novice should use a caliper to verify proper primer seating depth and then run a finger over several of these. This will teach the correct "feel" so that you can verify all remaining seating depths by "feel". After you check primer depth, return the case, mouth up, to the loading block.

After priming, return any unused primers to their original container and replace them in your storage area.

*Each powder charge should be carefully weighed. The use of a powder dispenser will add speed and convenience.*

## STEP ELEVEN

### WEIGHING POWDER AND CHARGING

Weighing powder must be done with great care and accuracy. Set up your powder scale carefully, following the instructions supplied with it. It is good practice to verify the scale's accuracy by using a weight check set.

Bring only one powder can to the loading bench. Read the label aloud. You must use the exact powder called for in the data. Then double check again. The inadvertent use of the wrong powder can cause a catastrophic accident.

Bring a box of bullets to the loading bench and read aloud the label on your bullet box to make certain the bullets are the correct weight (matched to the data you are using). Then measure the diameter and weigh a few bullets to be certain that what is in the box is the same as the label. Factory packaging errors have occurred. (A bullet will be seating immediately after a case is charged with powder.)

Pour some powder into the powder trickler and position the trickler alongside the scale pan. Also pour some powder into an open container (or preferably into a powder measure). Use a scoop of appropriate size to place a quantity of powder, somewhat less than a full charge, onto the scale pan.

If using a powder measure, adjust the measure to dispense somewhat less powder than you require. The metered charge will vary so be certain that the heaviest charges will not exceed the desired weight. (It is nettlesome to try and remove excess powder from the scale pan.) Dispense a metered charge directly onto the scale pan and then place the pan on the scale hanger.

Note: A handy powder scoop can be made by cutting off a fired case at an appropriate length and twisting a wire handle into the case rim's undercut. Straight cases

such as the 30 MI Carbine, 44 Magnum and 45-70 make the best scoops.

Bring the scale into perfect balance, using the powder trickler to add one kernel of powder at a time to the scale pan. Now pour the weighed powder charge into a case using a powder funnel.

**CAUTION:** Make certain scale poises are not inadvertently moved during the loading process.

**CAUTION:** Powder is highly flammable and requires care in storage and handling. Be certain to read and follow the cautions contained in Chapter Seven.

**CAUTION:** Lyman lab technicians have observed a potential serious phenomena involving mechanical powder scales, plastic loading blocks, Styrofoam packaging and other objects made of plastic. These materials sometimes retain a static electric charge, enough to create an electro- static field of varying radii.

This electro-static field has proven capable of causing radical defection of uncharged and zeroed scales. Dependant upon circumstances, powder in the scale pan tends to dampen the amount of deflection by varying degrees.

We strongly urge that the loading bench be cleared before setting up the scale. Then replace equipment one piece at a time while observing the scale pointer. Any item that causes a scale deflection should be removed from the loading bench. Do this at every loading session.

Novices should avoid the use of compressed powder charges (where the powder level in the case is so high as to require compression of the powder in order to seat a bullet to the correct depth). Die adjustments for seating compressed powder charges are discussed in Chapter Seven. Chapter Seven also explains how to avoid using excessively compressed powder charges (a handloading no-no).

### NOTES ON USING A POWDER MEASURE

We have instructed that after metering a powder charge, it be checked and brought into perfect balance using a scale and powder trickler. If you are loading ammunition for a non-critical application, in order to save time you may opt to pour a metered powder charge directly into a case (without the scale check and trickler balance). (**CAUTION:** This method should never be used with maximum loads or by novices at any time. When using a powder measure in this manner, ALWAYS check at least every tenth load on the scale to insure that the measure has not gone out of adjustment and that you are using a uniform metering technique.) Keep in mind that fine (small) grain or spherical powders lend themselves to more uniform metering as opposed to course (large) grain propellants. Be sure you are capable of metering uniform charges before using this method. Verify your uniformity by weighing 20 or more consecutive metered charges.

## STEP TWELVE

### BULLET SEATING AND CRIMPING

Next, immediately transfer the charged case to the loading tool and seat a bullet to the correct over-all length. Follow the die manufacturer's instructions to properly seat the bullet to the correct depth. The maximum overall length for a loaded round is clearly listed in the data for each cartridge. Dependant upon the bullet and equipment used, the finished individual overall cartridge length may vary by plus or minus 0.005".

Note: Generally, bullets should be seated to the overall length shown at the top of each data panel. Do check to see that ammo so assembled will feed through the magazine of your rifle and that it chambers properly. (**CAUTION:** Do this testing out of doors with the muzzle pointed at a safe backstop.) Or better yet, make a dummy round (no powder or primer) to check overall length. Circumstances, which include magazine length, chamber dimensions and bullet give, may

*Immediately after adding powder to case, seat the bullet so as to have a finished cartridge of the correct overall length.*

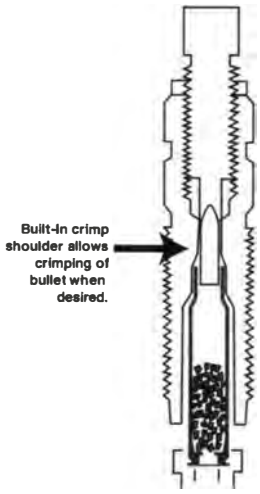


make it necessary to use a different length.

When all cases are charged and bullets seated, return all powder (from trickler, open container or powder measure) to the original container and return the container to its remote storage area.

Bullet crimping is required whenever there is a possibility of the bullet striking a firearm surface (during the feed/chamber cycle) with sufficient force to push the bullet deeper into the case. This means that ammunition for almost all semi-automatic and pump actions should have the case crimped to the bullet. Also, if there is a danger of the bullet creeping forward out of the case (loads with very heavy recoil) while in the magazine, ammunition should be crimped. All ammunition to be used in tubular magazines also must be crimped to prevent bullets from being driven deeper into the case during recoil. All ammo to be used in a revolver should be crimped.

Because crimping has a somewhat detrimental effect on accuracy, crimping should be limited to ammo intended for one or more of the just mentioned applications.

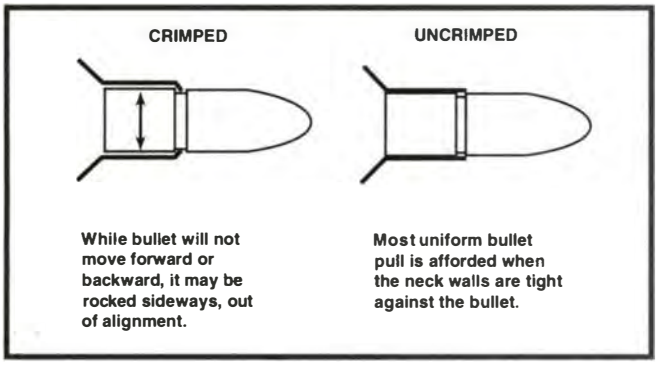


Keep in mind that your bullets must have a cannelure (a groove around the bullet) in order to crimp. Such bullets must first be seated to a depth that will align the case mouth with the center of the bullet cannelure. Adjusting your seating/crimping die requires that you first back off the bullet seating screw substantially. Then, screw the die down far enough to turn the case mouth slightly inward into the bullet cannelure when the loaded round is fully raised into the die. Be certain the bullet seating screw is backed off far enough to prevent it from touching the bullet.

Note: Crimping loads with compressed powder charges will require extra care. See Chapter Seven for details. As stated, to do away with the need to constantly re-adjust the bullet seat/crimp die, most reloaders purchase an extra die body.

Note: The crimping operation may be combined with bullet seating, but the best results are obtained when it is done as a separate operation.

## STEP THIRTEEN

### FINAL INSPECTION

The final inspection should be done with great care. Start by looking for imperfections. These may include, but are not limited to: case necks which split during bullet seating, and case shoulders which buckle during crimping (most often due to a poor bullet cannelure or improper die adjustment). A second check of primer depth should be made by running your finger over each case head. Dropping the loaded round into a case headspace gauge is also recommended to help insure it will chamber properly. Also, measure a sampling of the loaded rounds to check for proper over-all length. Should any round be found abnormal, discard it in a safe manner.

*Make the final inspection of your loaded round and place it in an appropriately labeled box.*

Place loaded rounds into a suitable container. Clearly mark the container with: date loaded; primer used; times trimmed; powder and charge; bullet brand, weight and type, and overall ammo length. Then, enter all this information into your reloading log. Your log should also include the lot numbers of all the components used.

As stated the foregoing outlines the basic steps to assemble bottleneck, jacketed bullet ammunition; but there are many other requirements that must be observed. BE SURE TO READ ALL THE OTHER PERTINENT CHAPTERS OF THIS BOOK BEFORE ATTEMPTING TO RELOAD AMMUNITION.

# 4 Reloading Handgun Cartridges



As previously stated, the mechanical steps of reloading are actually simple. Nonetheless, there are several necessary considerations to be given to each step. The observance of these considerations will help ensure that the ammo you assemble will be safe, will function reliably, and be accurate. Several of these considerations are covered in detail in sections 3 and 4 and in some of the informative lead-ins preceding the data for specific cartridges. This information is vital and must be read and understood before actually beginning to assemble ammunition.

This following material describes the actual steps involved in reloading fired handgun and rifle cartridges with straight cases. The information given applies equally to lead or jacketed bullets. Slight deviations from these steps are sometimes required. Such minor step changes are discussed as appropriate.

To reload a fired straight-cased cartridge, 13 basic operations must be performed. The sequence of these can vary slightly depending on the specific equipment employed and reloader preference. The sequence we have chosen is based on the specific tools we used to illustrate the process. This is the method most often favored by knowledgeable handloaders. Not every step is always required as we will indicate.

The thirteen steps to reload handgun ammo are as follows:

1. Selection of load and components to be used.
2. Case inspection.
3. Case cleaning (omitted when using new unfired cases).
4. Case lubrication (not required when using a carbide sizing die).
5. Case resizing and fired primer removal (not required when using new unfired cases).
6. Lubricant removal (not required when using new unfired cases or a carbide sizing die) and second inspection.
7. Case length measuring.
8. Case trimming and/or deburring (not always required).
9. Case mouth expansion.
10. Seating new primer.
11. Weighing and charging powder.
12. Bullet seating and crimping (as required).
13. Final inspection.

**CAUTION:** Read all pertinent material before actually beginning to assemble ammo.

## STEP ONE

### SELECTING A LOAD AND COMPONENTS

In the beginning, the selection of components may seem a difficult and confusing task. This is especially true for the reloader who has not yet acquired a general knowledge of basic ammunition details. Nonetheless, you will soon find that component selection quickly becomes an easy and fun part of reloading. The learning process can be hastened along by developing as much ammo knowledge as leisure time reading will allow.

### Selecting Cartridge Cases

The selection of fired cartridge cases, or new brass, presents no special challenge. If you have saved your fired cases you need only separate them into specific groups by brand and lot number. Lot numbers appear on the factory ammo box. This number may be on an inside flap or the box back. Keeping brass segregated by lots will maximize accuracy potential and ballistic uniformity. If you purchase new unfired cases, of course they must be of the appropriate caliber. Bulk packaged brass (often in lots of 50, 100, or more) is the least expensive way of obtaining new cases.

**Test Components:**

| | |
|---|---|
| Cases | Federal |
| Trim-to Length | 1.149" |
| Primers | CCI 500 |
| Primer Size | Small Pistol |
| Lyman Shell Holder | No. 1 |
| Jacketed Bullets Used | Speer JHP #4007, 110 gr. |
| | Hornady JHP #35710, 125 gr. |

*Primer size and the specific primer we used is clearly shown at the beginning of the data for each caliber.*

**CAUTION:** Never load cartridge cases from an unknown source, i.e. cases picked up at the range or purchased as once-fired brass. Use only brand new brass or cases obtained as the result of firing factory ammo in your firearm. For more on this topic see Chapter Five.

### Selecting Primers

The correct primer size is listed at the beginning of the data for each cartridge, for example: large pistol, large pistol magnum, small pistol. In the beginning we suggest you use the exact primer we used for the development of our data. As an alternate, match the primer brand and correct size to the brand of the case you are reloading. Do not use magnum primers unless the data specifically calls for these as doing so can alter ballistic uniformity and the safety level of the data.

Do not allow cartridge nomenclature to enter into the selection of primers. For example the 32 H&R Magnum never requires the use of a magnum primer. Always, follow the primer size and type we list in our data table.

### Selecting Powders

There are approximately 100 different propellant powders available to the reloader. The burning speed of each and the ballistics obtained can vary tremendously. Powders are designed to suit specific applications, such as: bullet weight, case shape and volume, pressure level and other specific ballistic and firearm needs. As a result only certain propellants are suitable for specific applications. When selecting a powder for your first reloading efforts, we suggest the use of the propellant listed in our data for the accuracy load.

158 gr. Jacketed HP — 1.480" OAL — BC: .206 SD: .177

| Powder | Sugg Starting Grains | Velocity fps | Pressure C.U.P. | Max Load Grains | Velocity fps | Pressure C.U.P. |
|---|---|---|---|---|---|---|
| Clays | 2.8 | 648 | 14,500 | 3.2 | 712 | 16,600 |
| **Unique** | 4.7 | 645 | 14,400 | 5.0 | 710 | 16,600 |
| | | | | **(+P)5.2** | **761** | **18,200** |
| AA#5 | 5.0 | 674 | 12,100 | 5.8 | 821 | 16,300 |
| Power Pistol | 4.3 | 659 | 14,800 | 4.8 | 700 | 15,600 |
| SR-4756 | 4.9 | 611 | 13,800 | 5.4 | 705 | 16,800 |
| HS-6 | 5.5 | 572 | 12,400 | 6.5 | 726 | 16,600 |
| Blue Dot | 6.0 | 607 | 13,500 | 6.7 | 711 | 15,700 |
| 2400 | 8.4 | 645 | 13,500 | 9.4 | 745 | 16,400 |

*Selection of the propellant chosen for your first loads is easily made by referencing the bullet weight (highlighted) you are using, the accuracy powder (highlighted), and the starting load as shown in the data.*

**CAUTION:** Always start with the exact powder charge weight shown under the starting grains column. Heavier loads should not be used until the reloader has gained some experience and fully understands proper load development.

### Selecting Bullets

Bullet selection may at first be somewhat confusing. To simplify the process, select a bullet weight to duplicate the factory ammo you favor. The appropriate diameter bullet may be determined from the diameter versus caliber bullet table in Chapter Eight. Many calibers use the same diameter bullet. For example, 38 Special, 357 Magnum and 357 Maximum all use the same jacketed bullet diameter of .357".

There is another consideration in bullet selection. This is for the need of a cannelure on any bullet to be used in a revolver. Roll crimping is essential for all such ammunition in order to prevent bullets from creeping forward under recoil. It simply is not possible to form a proper roll crimp unless the case mouth can be turned into a well formed bullet cannelure. However, ammo for any rimless semi-automatic case which headspaces on the case mouth should never be roll crimped.

For semi-automatic firearms another bullet consideration is the nose shape of the bullet. Pointed or round nose bullets are essential to proper firearm functioning in many such firearms.

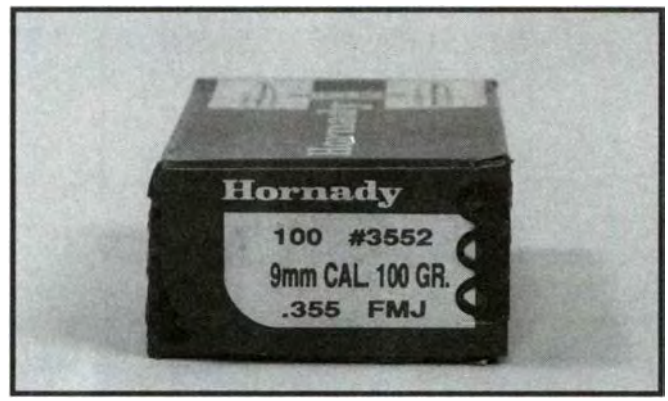


*Bullets should be selected by the desired weight and correct diameter.*

Our listed data specifies the bullet manufacturer's product number for each jacketed bullet we tested. We also list the bullet mould number for all cast bullet data. All of the listed bullets will work fine for target shooting. However, for proper jacketed bullet expansion on varmints or game you will need to make certain that the selected bullet is properly designed and suitable for the velocity range of your cartridge. If you are loading for a hunting purpose, avoid the use of bullets designated as Match or Target style as these may not expand properly on game.

## THE LOADING SEQUENCE

The use of two loading blocks is suggested. As each step is performed, the case should be removed from one loading block, processed, and then placed in the second loading block. This will keep the process orderly and prevent many common bench errors.

Our reloading procedure follows the batch method. That is, a single operation will be performed on all cases to be reloaded before proceeding to the next operation.

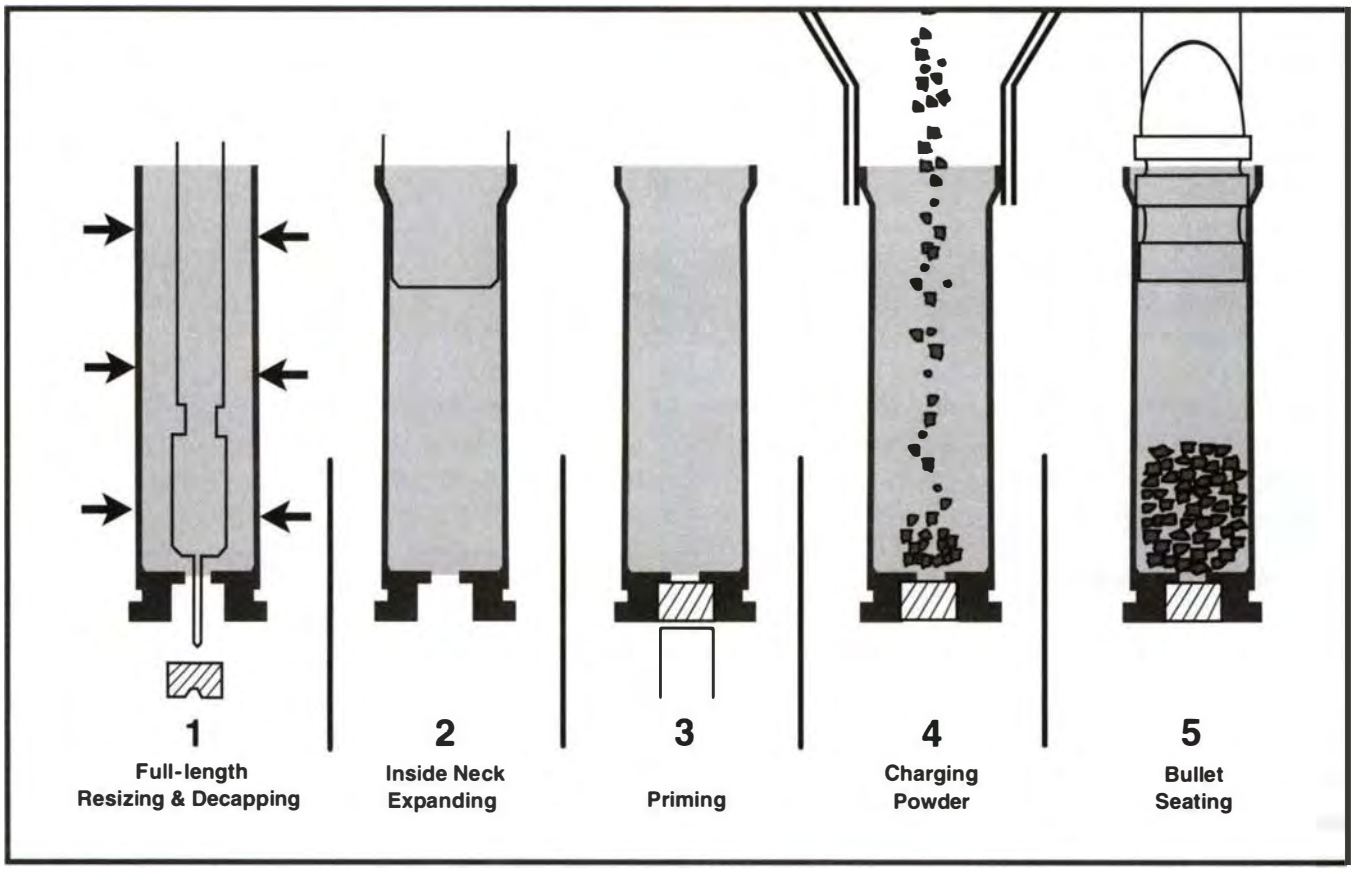


*The basic steps of handgun case reloading.*

*I. Case is sized to return it to factory-like dimensions. The fired primer is removed during this operation. II. Case mouth is expanded III. New primer is seated IV. Propellant powder is weighed and placed into case. V. Bullet is seated and (if required) crimped.*

## STEP TWO

### CASE INSPECTION

Fired cartridge cases have a finite life. Depending upon the firearm used, caliber of the firearm, internal ballistics of the load, and other considerations, it is reasonable to expect from 6 to 15 firings from each case. Eight firings are average for the typical handgun cartridge such as the 38 Special or 9mm Luger. Magnum cases such as the 357 Magnum, or 44 Magnum when assembled with heavy loads, typically last for only 4 or 5 firings. Low pressure cartridges fired in strong revolvers, such as the standard velocity loads for the 38 Special, generally offer the greatest number of firings.

All cases reach a point when further reloading becomes unsafe. Keep careful reloading records and perform a visual inspection of each case before, during, and after reloading to help ensure that you use only suitable fired cases.

Begin your inspection by wiping each case with a cloth to remove excess fouling, dirt, and any foreign material that could scratch your resizing die or the case itself. Turn each case mouth down and tap it lightly on the bench to dislodge anything that may have entered the case after firing.

Now look for split necks or bodies, signs of incipient case separation (a bright partial or complete ring around the case at the point where the case's solid base joins the wall of the cartridge), corrosion, or burn through perforations. Also look for any signs of gas

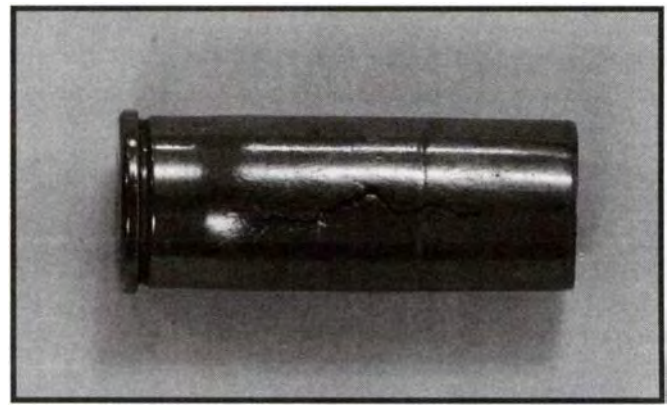

*Cases must be inspected and those with any defect must be discarded.*

leakage around the primer pocket. Eliminate all cases with any visual sign of defect or abnormality. (For more details refer to Chapter Five.) To prevent later inadvertent use of a rejected case, crimp its mouth shut with a pair of pliers before discarding it. Then place each case, mouth up in a loading block.

## STEP THREE

### CASE CLEANING

Case cleaning is an important step to protect your reloading dies and firearm chambers. If you also want your reloads to look like new, now is the time to put all your cases into a Lyman Tumbler. Follow the instructions that come with the tumbler. After removing cases from the tumbler tap the mouth of each case on the bench to insure that no tumbling media remains in it. Then wipe each case lightly with a clean cloth.

## STEP FOUR

### CASE LUBRICATION

When a cartridge is fired it expands somewhat. The expanded dimensions are not compatible with holding a new bullet with proper tension (bullet pull) and are not conducive to easy chambering. To avoid these and other difficulties, all fired cases must be resized.

Roll each case lightly across your lubricant pad. Do not fail to lubricate each case or it will stick solidly in the resizing die creating a very difficult to correct problem. Do not use excessive lubricant as doing so may cause cases to dent during the resizing step. Use only enough lubricant to insure the case enters and leaves the resizing die without undue difficulty. Be neat. Do not get lubricant into the primer pocket or case mouth.

We strongly recommend the use of a carbide resizing die (when available for your caliber) as this die will eliminate the need for this step as well as the later removal of the lube.

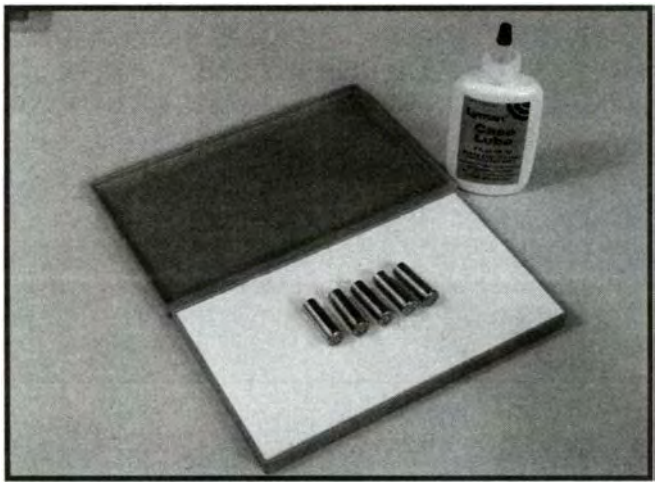

*Each case must be lubricated before it is resized unless a carbide die is used.*

## STEP FIVE

### CASE RESIZING AND FIRED PRIMER REMOVAL

Place a lubed case into the shell holder and run it into the full length resizing die. (Follow the instructions for proper die adjustment as explained in the material supplied with your die set.)

Generally, a non-carbide resizing die should be adjusted so that the shell holder, at the top of its travel, will contact the resizing die and create a slight cam action against the die. During this operation the fired primer will automatically be ejected from the case. Withdraw the case from the sizing die and place the case into the loading block, mouth down. Visually inspect each case as it is placed in the loading block to ensure the fired primer has been removed.

Note: The decapping rod should be adjusted just low enough to ensure the primer is pushed free of the case. If the decapping rod is too low it will impact the inside bottom of the case and be damaged.

Note: In the past, varying sources have suggested that the primer be seated as the case is withdrawn from the resizing die. However, it is possible for case lubricant to contaminate and thus destroy primers. Therefore, we suggest that this is not the ideal time for seating the new primer.

**CAUTION:** If you use a carbide resizing die the shell holder should make light contact with the bottom of the die. Heavy contact could crack the carbide sizing ring. Always follow the instructions that accompany such dies.

## STEP SIX

### LUBRICANT REMOVAL AND SECOND INSPECTION

Carefully wipe each case with a clean cloth so as to remove all traces of sizing lubricant. Use a clean section of the cloth for each case. Inspect the case for any flaws. Repeated case resizing and firings can cause case mouths and bodies to become brittle and split when fired or during resizing. Watch for signs of incipient case separation (see Chapter 5). It is a good idea at this time to drop the resized case into a maximum cartridge gauge as a worthwhile inspection step. Place

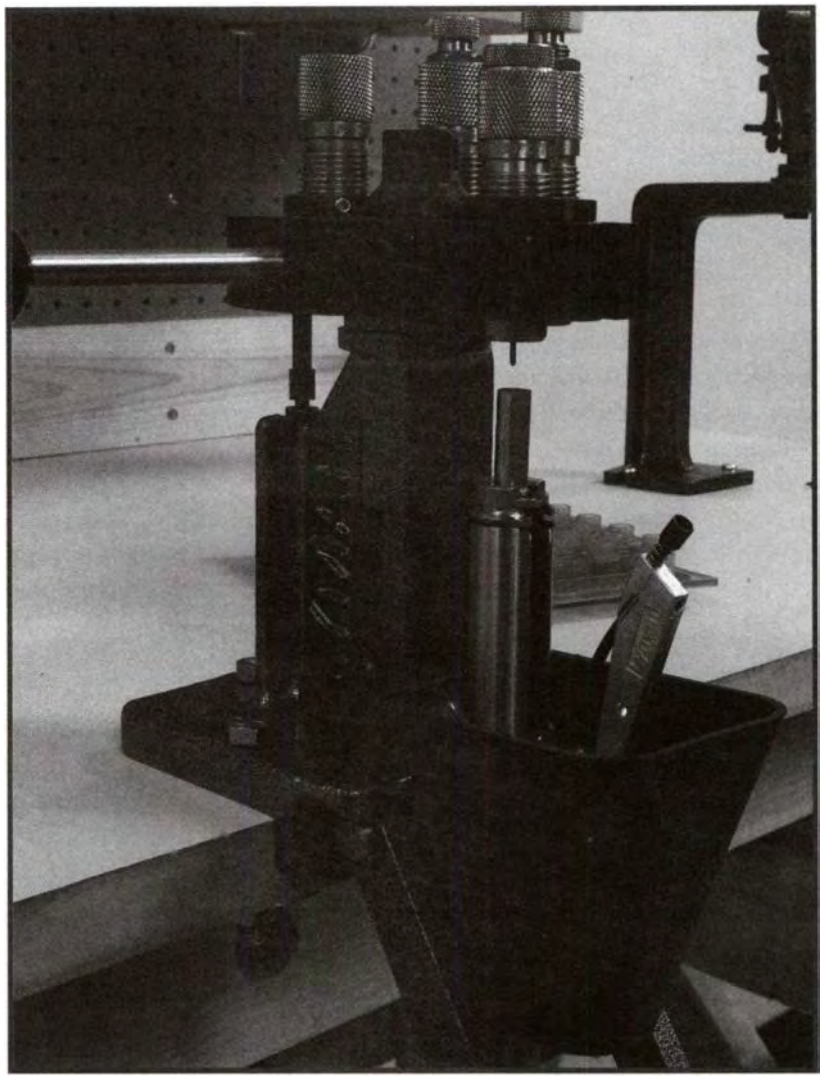

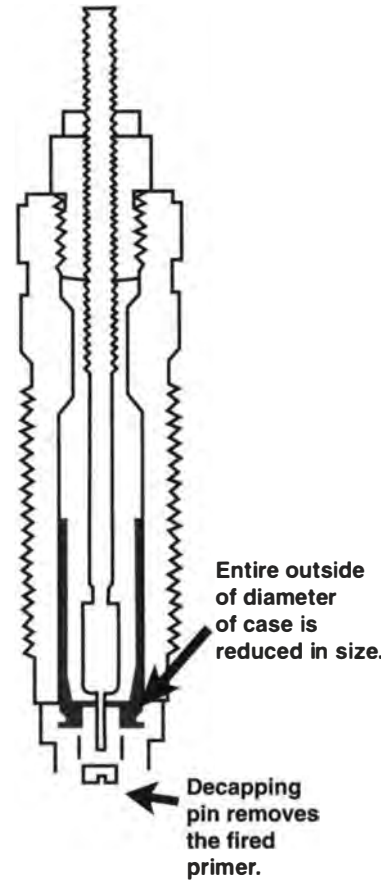


*The first die usage step of reloading requires that the case be completely run into the full length resizing die. This will return the case to factory new dimensions and remove the old primer.*

the cleaned and inspected case in your loading block, mouth up. Should you find any defects, this is the time to discard the entire lot of cases.

IMPORTANT - Case lubricant can ruin a primer causing delayed ignition or a failure to fire. To avoid potential primer contamination this is the point to stop the reloading process and thoroughly wash and dry your hands.

## STEP SEVEN

### CASE LENGTH MEASURING

Case measuring is an important step both for safety and for proper ammunition functioning. Cases stretch when fired and during resizing. If they exceed listed maximum case length, they will be difficult if not impossible to chamber. Excessive chamber pressure will also be caused by excessive case length. Therefore, each case must be carefully measured at this point. A dial indicating caliper is the best tool for this process.

The data for each cartridge clearly indicates the maximum allowable length for the resized case. If one or more cases are found to be at maximum or greater length, trim all of your cases to a uniform length.

IMPORTANT: Case length of rimless, straight cartridges is critical for proper ammo headspace. Be certain that such cases stay within the listed trim-to and maximum cartridge lengths.

## STEP EIGHT

### CASE TRIMMING AND DEBURRING

As stated, cases must be trimmed when they become too long. Case trimming is also recommended whenever loading new or once fired brass as they are often not of a uniform length. Trimming uneven cases to a uniform length will enhance accuracy and ballistic uniformity.

Note: if you will be crimping cases to bullets

(required for all ammo to be used in revolvers or tubular magazines), the crimping process will be less than satisfactory if cases are not of a uniform length.

The proper trim-to length for cases is clearly shown in the data for each cartridge. Adjust your trimmer according to the manufactures instructions. When trimming, allow for some dwell time - that is a number of rotations of the cutter after the case has been trimmed to length. This will help insure the maximum uniformity of finished lengths.

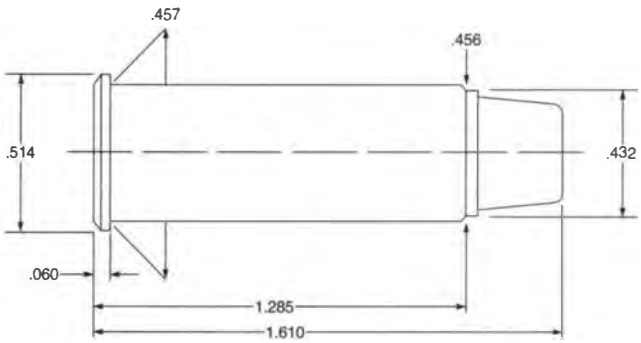


**Test Components:**

Cases . . . . . .Remington
Trim-to Length . . . . . .1.275"
Primers . . . . . .CCI 300 & 350
Primer Size . . . . . .Large Pistol, Std. & Magnum
Lyman Shell Holder . . . . . .No. 7
Jacketed Bullets Used . . . .Sierra JHC #8600, 180 gr.

After trimming, remove the burrs (formed by the trimmer cutter) from both the inside and outside of the case mouth using a Lyman Deburring tool. A few twists of the tool is all that is needed. Do not deburr the case to a sharp edge. Tap the case mouth on the bench to dislodge any brass chips from inside the case. Place the case, mouth down, in your loading block.

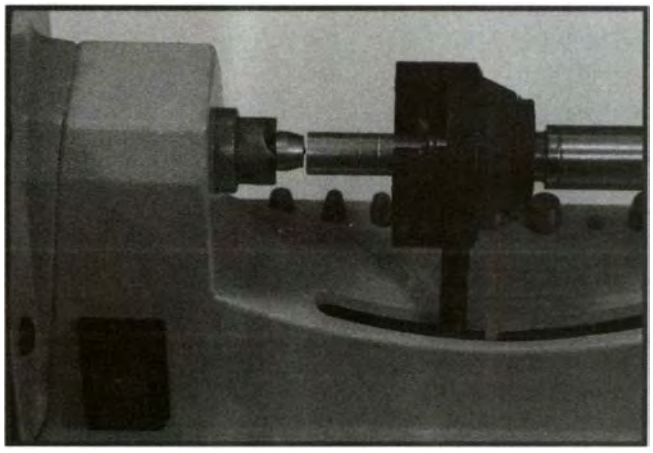

*Case trimmers are miniature lathes that quickly restore a case to a safe overall length.*

**CAUTION:** The material trimmed from a case flows from the junction of the case head and wall. As brass continues to flow and is trimmed away, this section of the case becomes thinner until it reaches a point where the case is severely weakened. Therefore, never trim a case more than four times (keep careful records). When a case needs its fifth trimming it must be discarded.

Note: Many handgun cases wear out long before any trimming is required.

Note: The initial trim of new cases is not counted when determining the number of times a case is trimmed as this trim is done not because of case stretch but rather to create a uniform length.

*After trimming, all cases must be lightly deburred on the inside and outside of the case mouth.*

## STEP NINE

### Case Mouth Expansion

Case mouths must be expanded to accept the bullet and to hold it with the proper tension (bullet pull). If you are loading lead bullets the case mouth should be both expanded and belled in order to prevent shaving lead from the bullet base during seating. Follow the instructions that come with all 3 die straight case sets or with the M die when purchased as an accessory for loading lead bullets into bottleneck cases.

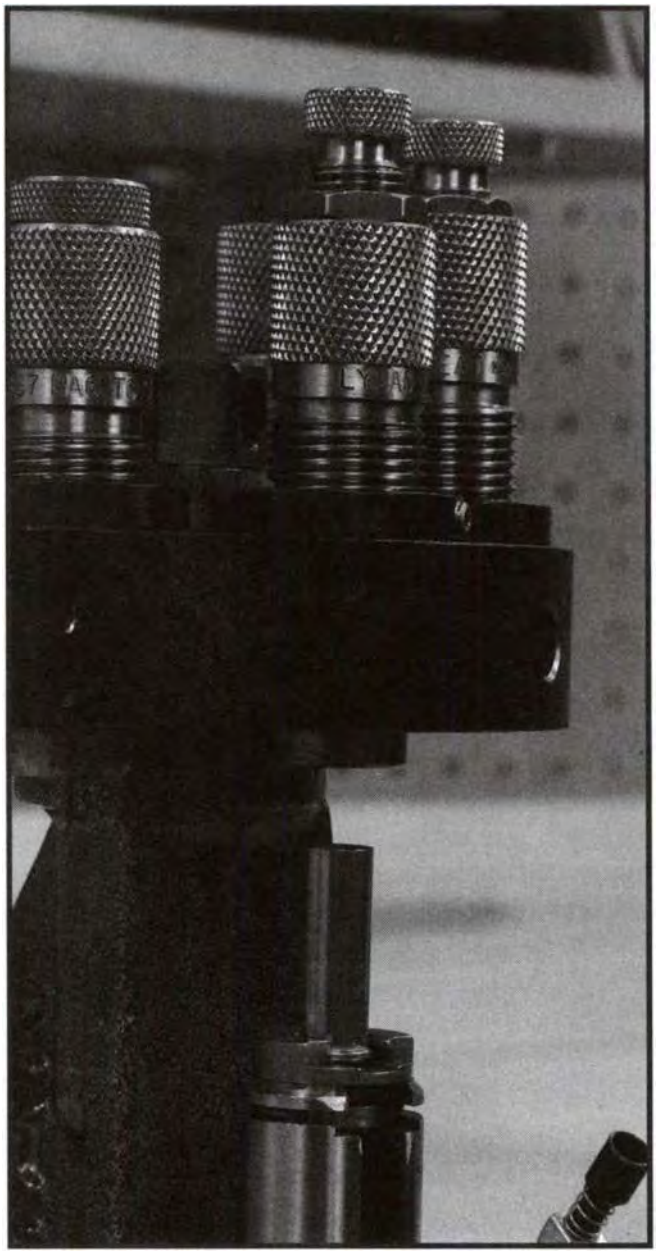

*Case mouth expansion in two steps is required when seating lead bullets.*

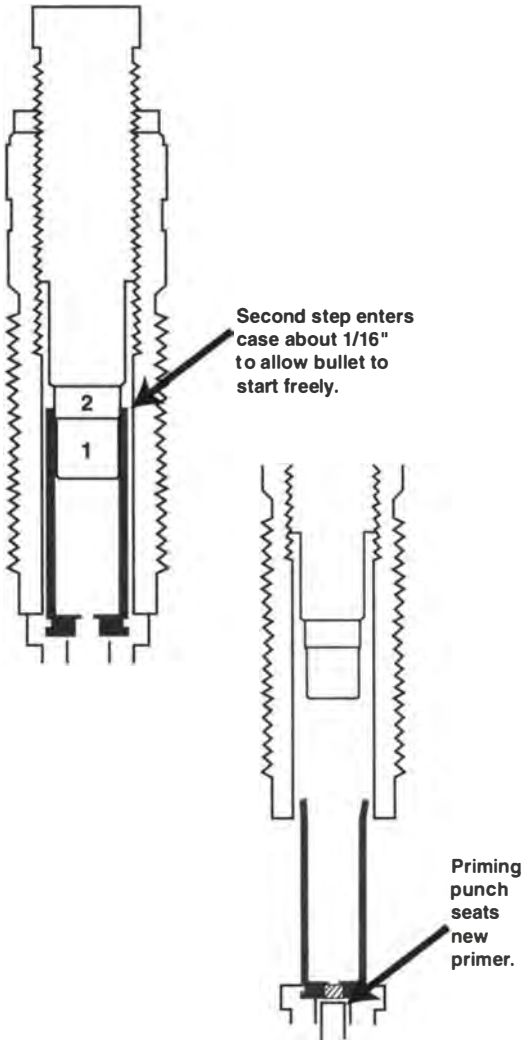


## STEP TEN

### PRIMER SEATING

We recommend that primer pockets be cleaned before seating a new primer. This is a simple operation requiring only a few twists of the pocket cleaning tool. (Not required when loading new cases). As each case's primer pocket is cleaned, place the case in the loading block, mouth up.

Bring a box of 100 primers to the bench and read the label aloud to insure that you have the correct brand and size. Then double check again. You must always use the primer size and type called for in the data.

Its always good practice to again wash and thoroughly dry your hands before starting to prime. Place a quantity of primers (never more than 100, or a lesser amount as needed) onto a primer flipper tray. Gently rotate the primer tray until all primers are anvil side up.

*Primer seating may be accomplished in many ways and with differing tools. One of the best methods is to use a Ram Prime unit mounted in one of the reloading tool's die stations.*

Most loading tools come equipped with a basic primer seating tool that primes the case at the normal shell holder position. Follow the instructions supplied with the tool. Place a primer, anvil up, into the priming post, push the post under the shell holder, and then lower the shell holder over the post to seat the primer. On many loading tools, this requires a "feel" method to seat the primer to the correct depth. Some tools will have a rudimentary stop to adjust primer seating depth.

A better method for primer seating is to use a ram-prime tool which mounts into the tool's die station. Primer seating depth can then be controlled by adjustment of the ram-prime body (using the press handle's solid stop at the end of the priming stroke). This method produces a very uniform primer seating depth.

Generally, primers should be seated 0.003" to 0.005" below flush of the case head - a nominal of 0.004" below flush.

**CAUTION:** Primers seated too high (above flush) are a needless hazard. It is possible that such primers can be ignited before the firearm action is closed, causing a serious accident. High primers are also prone to misfires. Primers seated too deeply (below flush) can become erratic in performance or misfire. For more details on primers see Chapter Six.

**CAUTION:** Primers are explosive and require special care in storage and handling. See Chapter Six for vital information.

Place the primed case in the loading block mouth down. When all cases have been primed, verify proper priming depth by running a finger over each case head. The novice should use a caliper to verify proper primer seating depth and then run a finger over several of these. This will teach the correct "feel" so that you can verify all remaining seating depths by "feel". After you check primer depth, return the case, mouth up, to the loading block.

After priming, return any unused primers to their original container and replace them in your storage area.

## STEP ELEVEN

### WEIGHING AND CHARGING POWDER

Weighing powder must be done with great care and accuracy. Set up your powder scale carefully, following the instructions supplied with it. It is good practice to verify the scale's accuracy by using a weight check set.

Bring only one powder can to the loading bench. Read the label aloud. You must use the exact powder called for in the data. Then double check again. The inadvertent use of the wrong powder can cause a catastrophic accident.

Bring a box of bullets to the loading bench and read aloud the label on your bullet box to make certain the bullets are the correct weight (matched to the data you are using). Then measure the diameter and weigh a few bullets to be certain that what is in the box is as described on the label. Packaging errors have occurred. (A bullet will be seated immediately after a case is charged with powder.)

Pour some powder into the powder trickler and position the trickler alongside the scale pan. Also pour some powder into an open container (or preferably into a powder measure). Using a scoop of appropriate size, place a quantity of powder, somewhat less than a full charge, onto the scale pan. (If using a powder measure,

adjust the measure to dispense slightly less powder than you require. Meter a charge directly onto the scale pan and then place the scale pan on the scale hanger.)

Note: A handy powder scoop can be made by cutting off a fired case at an appropriate length and twisting a wire handle into the case rim's undercut. Straight cases such as the 357 Magnum or 44 Magnum make the best scoops.

Bring the scale into perfect balance by using the powder trickler to add one kernel of powder at a time to the scale pan. Now pour the weighed powder charge into a case using a powder funnel.

**CAUTION::** Make certain scale poises are not inadvertently moved during the loading process.

**CAUTION:** Powder is highly flammable and requires care in storage and handling. Be certain to read and follow the cautions contained in Chapter Seven.

**CAUTION:** Lyman lab technicians have observed a potential serious phenomena involving mechanical powder scales, plastic loading blocks, Styrofoam packaging and other objects made of plastic. These materials sometimes retain a static electric charge, enough to create an electro-static field of varying radii.

This electro-static field has proven capable of causing radical defection of uncharged and zeroed scales. Dependant upon circumstances, powder in the scale pan tends to dampen the amount of deflection by varying degrees.

We strongly urge that the loading bench be cleared before setting up the scale. Then replace equipment one piece at a time while observing the scale pointer. Any item that causes a scale deflection should be removed from the loading bench. Do this at every loading session.

Novices should avoid the use of compressed powder charges (where the powder level in the case is so high as to require compression of the powder in order to seat a bullet to the correct depth). Die adjustments for seating compressed powder charges are discussed in Chapter Seven. Chapter Seven also explains how to avoid using excessively compressed powder charges (a handloading no-no). Happily most handgun loads avoid compressed powder charges.

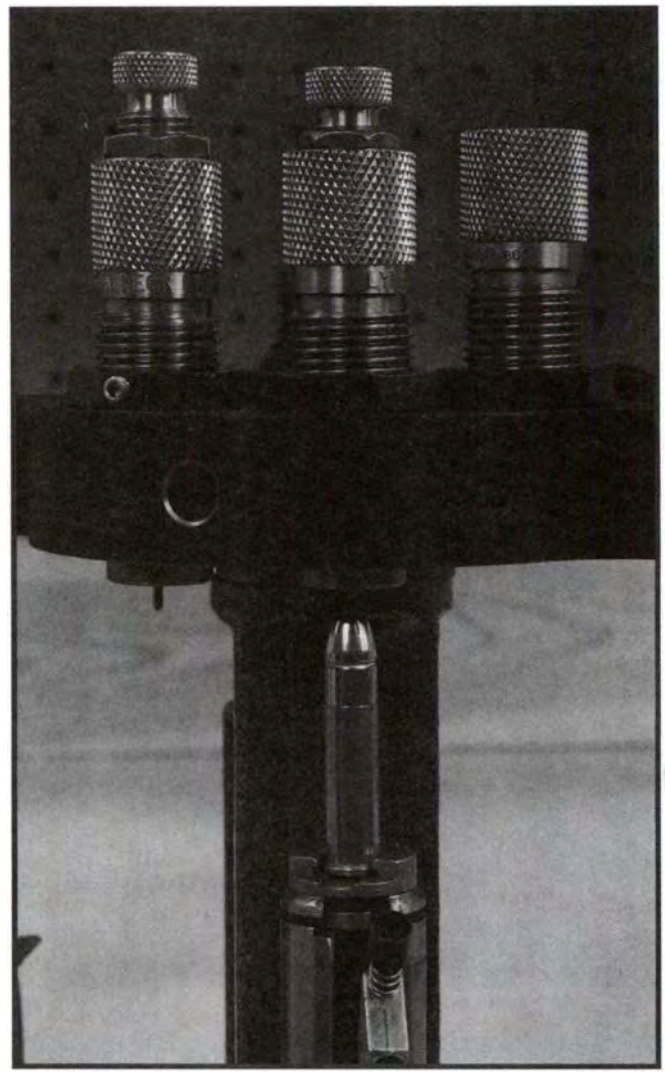

*Immediately after adding powder to case, seat the bullet so as to have a finished cartridge of the correct overall length.*

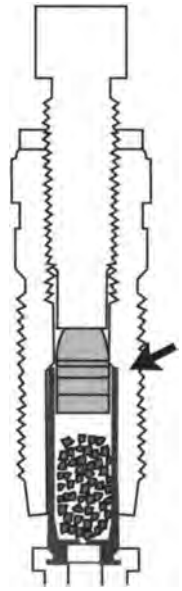

**Note The entire cartridge case does not enter this die.**

**Built-in crimp shoulder allows crimping of bullet when desired. Do not roll-crimp rimless autoloading cartridges which headspace on the case mouth; taper crimp only, using a fourth die.**

### NOTES ON USING A POWDER MEASURE

We have instructed that after metering a powder charge, it be checked and brought into balance using a scale and powder trickler. If you are loading ammunition for a non-critical application, you may want to pour a metered powder charge directly into a case (without the scale check and trickler balance) in order to save time. (Note: This method should never be used with maximum loads or by novices at any time.) When using a powder measure in this manner, ALWAYS check at least every tenth load on the scale to insure that the measure has not gone out of adjustment and that you are using a uniform metering technique. Fine (small) grain powders lend themselves to more uniform metering as opposed to course (large) grain propellants. Be certain that you are capable of metering uniform charges before using this method. Verify your ability by metering and weighing at least 20 consecutive charges.

## STEP TWELVE

### BULLET SEATING AND CRIMPING

Next immediately transfer the charged case to the loading tool and seat a bullet to the correct over-all length. Follow the die manufacturer's instructions to properly seat the bullet to the correct depth. The maximum overall length for a loaded round is clearly listed in the data for each cartridge. Dependant upon the bullet and equipment used, the finished overall cartridge length may vary by plus or minus 0.005".

Note: Generally, bullets should be seated to the overall length shown at the top of each data panel. Do check to see that ammo so assembled will feed through the magazine of any automatic and that it chambers properly. Check revolver ammo to see that it does not come too close to the end of the cylinder. (**CAUTION:** Do this testing out of doors with the muzzle pointed at a safe backstop.) Or better yet, make a dummy round (no powder or primer) to check the overall length and function. Circumstances, which include magazine length, chamber dimensions, cannelure location, and bullet shape, may make it necessary to use a shorter than suggested overall length.

**CAUTION:** Excessively short overall handgun cartridge lengths can cause dangerous chamber pressure.

When all cases are charged and bullets seated, return all powder (from trickler, open container or powder measure) to the original container and return the container to its remote storage area. At this time, re-verify that the correct powder was used.

**CAUTION:** When loading rimless case ammo for a semi-automatic handgun (such cartridges headspace from the case mouth) never roll crimp your case. Doing so may dangerously shorten the case headspace dimension. For such ammo always use a taper crimp. Taper crimping dies are standard in some die sets or may be purchased as an accessory.

For revolvers, using a rimmed case, roll crimping is required to keep bullets from creeping out of the case during recoil. All rimmed handgun ammo to be used in tubular magazine rifles should also be roll crimped to prevent bullets from being driven deeper into the case during recoil. Only flat or blunt nosed bullets should be used in tubular magazines.

Keep in mind that when roll crimping, your bullets must have a cannelure (a groove around the bullet). Such bullets must first be seated to a depth that will align the case mouth with the center of the bullet cannelure. Adjusting your seating/crimping die requires that you first back off the bullet seating screw substantially. Then screw the die down far enough to turn the case mouth slightly inward into the bullet cannelure when the loaded round is fully raised into the die. Be certain the bullet seating screw is backed off far enough to prevent it from touching the bullet.

Note: Crimping loads which compress the powder charge will require extra care. See Chapter Seven for details. Additionally, to do away with the need to constantly re-adjust the bullet seat/crimp die, most reloaders purchase an extra die body for any crimping operation.

Note: The crimping operation may be combined with bullet seating, but the best results are obtained when it is done as a separate operation.

## STEP THIRTEEN

### FINAL INSPECTION

The final inspection should be done with great care. Start by looking for imperfections. These may include, but are not limited to: case necks that split during bullet seating, or cases that buckled during crimping (due most often to poor bullet cannelure or excessive die-down adjustment). A second check of primer depth should be made by running your finger over each case head. Dropping the loaded round into a maximum case gauge is recommended to insure it will chamber properly. Also measure a sampling of the loaded rounds to insure proper over-all length. Should any round be found abnormal, discard it in a safe manner.

Place loaded rounds into suitable containers. Clearly mark the containers with: date loaded; primer used; times trimmed; powder and charge; bullet brand, weight, and type, and overall length. Enter all this into your reloading log. Your log should also include the lot numbers of all components used.

The loading procedure for bottleneck handgun cases, i.e. 30 Luger and 30 Mauser, is the same as for bottleneck rifle cartridges as described in the preceding chapter.

As stated, the foregoing outlines the basic steps to assemble most handgun ammunition. However, there are many other requirements that must be observed. BE SURE TO READ ALL THE OTHER PERTINENT CHAPTERS OF THIS BOOK BEFORE ATTEMPTING TO RELOAD AMMUNITION.

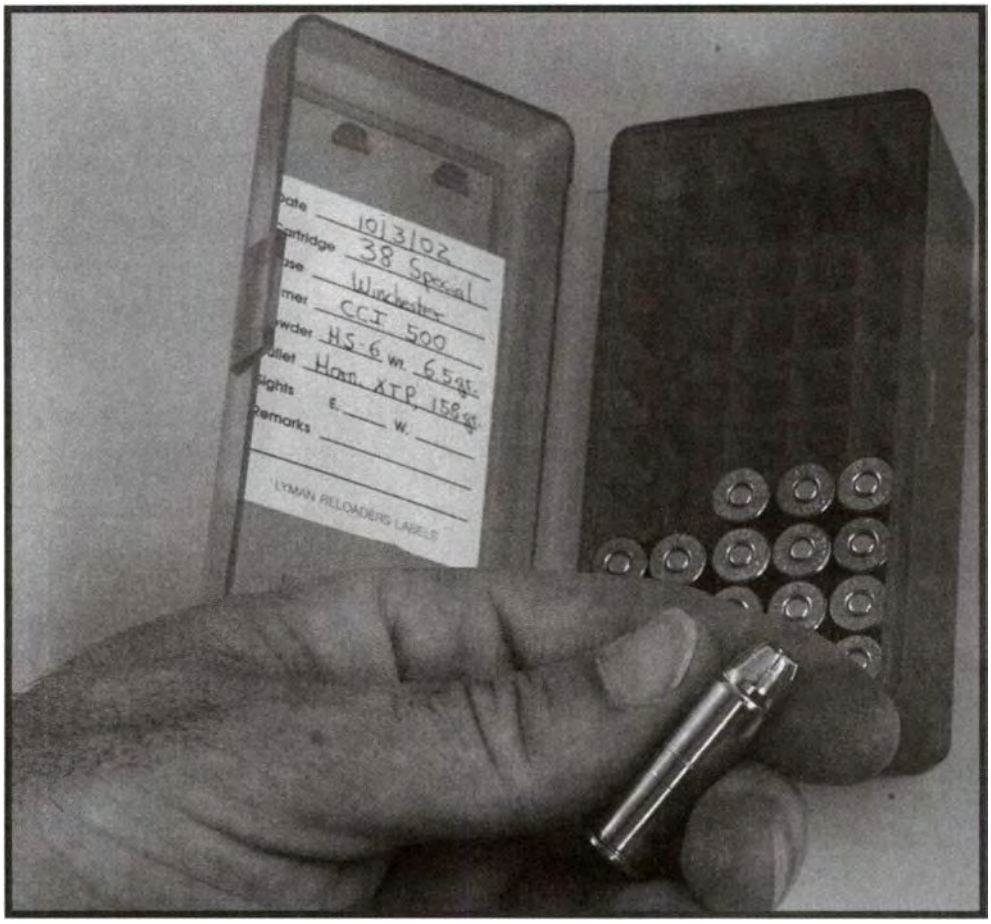


*Make a final inspection of your loaded round and place it in an appropriately marked box.*

# Section 3

Chapter Five:
Cases and Their Preparation . . . . page 44

Chapter Six:
Primers . . . . . page 56

Chapter Seven:
Propellant Powders . . . . . page 62

Chapter Eight:
Jacketed Bullets . . . . . page 72

Chapter Nine:
Cast Bullets . . . . . page 80

Cartridge cases are available with two types of primer pockets. Generally, only those cases with Boxer primer pockets should be considered useful. The proximate drawing clearly shows the differences between Boxer primed and Berdan primed style cases.

Note: Berdan primed brass cases can be reloaded. However, they require difficult to find and slow to use hand tools for decapping, very hard to locate anvil-less (Berdan) primers, often special size primer seating posts, as well as special data (because of the differing ignition characteristics of the various Berdan primers). For all these reasons we feel it is impractical to reload Berdan type cases.

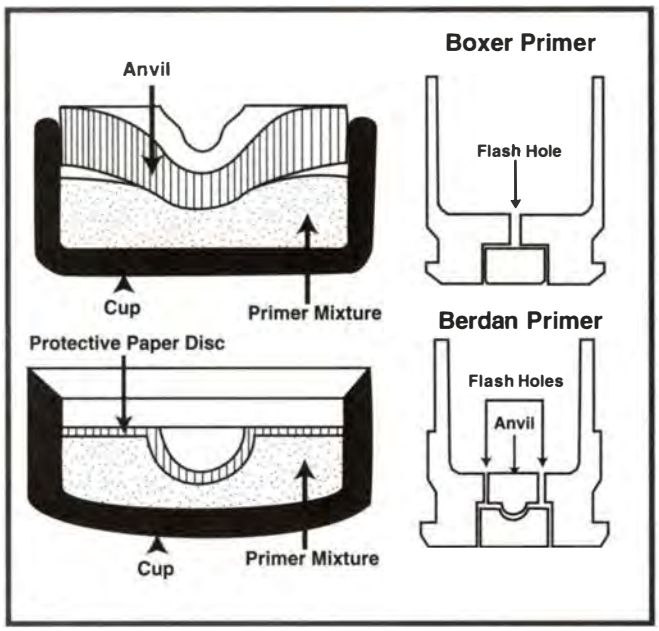


*The European designed Boxer primer type case has become a standard. The American designed Berdan primer type case is almost never used in the United States — the major exception being the non-reloadable CCI Blazer ammo cases.*

## Case Material

Cartridge cases have been made from a wide variety of material including brass, steel, aluminum and other less encountered materials. Only cases made of brass have value for the reloader. Brass cases may sometimes be nickel plated. These are equally as reloadable as plain brass cases. The disadvantage of plated cases is that the nickel will sometimes flake off during firing/resizing cycles. This flaking can mar loading dies. The advantage of nickel plated cases is that, under adverse atmospheric conditions, they generally will not corrode as fast as brass.

**CAUTION:** Never reload any non-brass cases, i.e. those made of steel, aluminum, plastic or other material.

## Case Configurations Rim Types

The head of a case (that portion which accepts the primer and affords a purchase for the firearm's extractor) may take several forms. These include: rimmed, semi-rimmed, rimless, rebated (reduced), and belted.

Rimmed cartridges were the first style cases developed. The large rim area allows for a substantial purchase on the case by the firearm's extractor. The rim's enlarged diameter and thickness also allows for an easy means to control headspace. Because body dimensions are less critical with this style case, chamber dimensions are often less tightly controlled as compared to chambers for rimless cases. Rimmed cases are often used in lever action and single shot rifles as well as revolvers. Typical examples of rimmed cases include the 22 Hornet, 30-30 Winchester, 45-70 Government, 38 Special and 44 Magnum. Rimmed cases may or may not have an undercut between the case body and the rim.

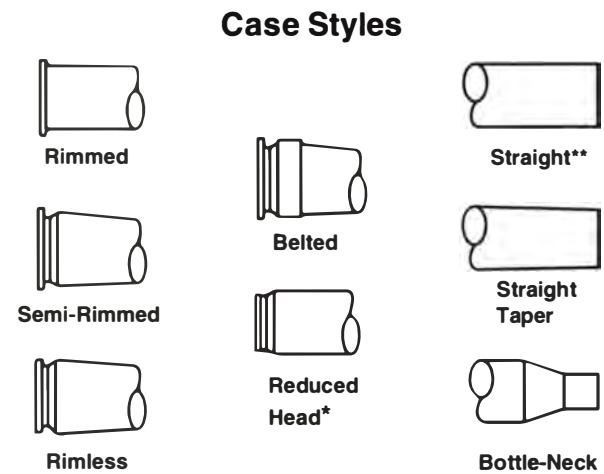


* Function is the same as rimless type.
** Straight cases do have a slight taper which is not visibly apparent.

A semi-rimmed case has a rim which is only slightly larger than the back end of the case body. This design is sometimes used to increase a smaller body rimless case's rear surface to fit a larger diameter bolt face. There are relatively few semi-rimmed cases. Those most often encountered include the 225 Winchester, 220 Swift (both designed to fit the larger 30-06 size bolt face), 25 ACP, and the 32 ACP. Semi-rimmed rifle cases are generally headspaced in the same manner as rimless cases. Semi-rimmed cases always have an undercut between the case body and rim area to ensure an adequate engaging surface for the firearm's extractor.

The rimless case design is extremely popular. This type of case has a rim of the same nominal diameter

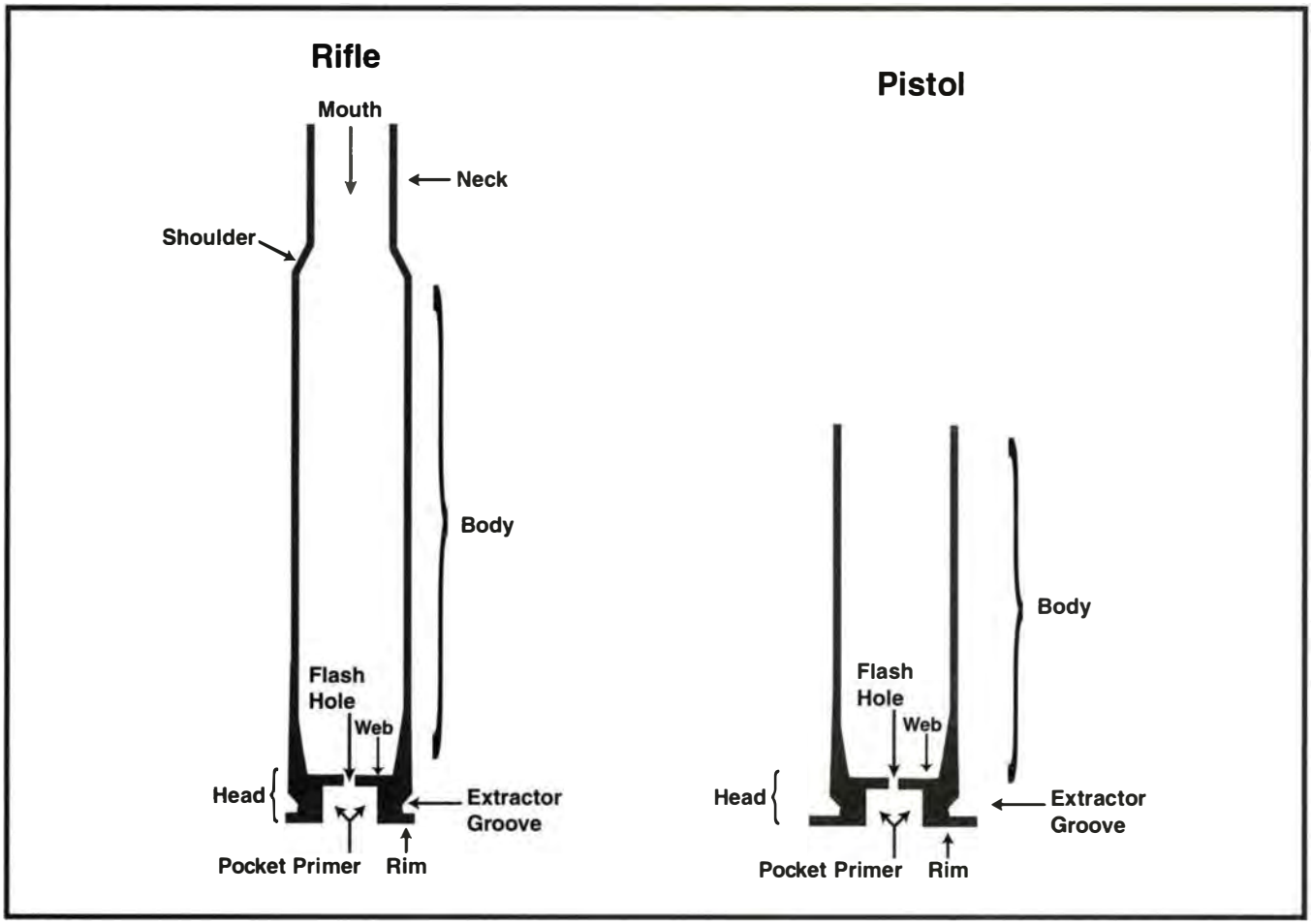


*While cases vary in shape and size, the same basic nomenclature applies to all center fire cartridges.*

(including any case taper) as the rear end of the case's body. There is always an under-cut between the rim and case body to afford a purchase area for the firearm's extractor. Typical of this style is the 223 Remington, 243 Winchester, 270 Winchester, 30-06 Springfield, and 45 ACP. Rimless cases are generally preferred for most firearms as they tend to feed smoothly from a magazine. The headspacing of most rimless cartridges is tightly controlled by using a diameter (datum line) around the case's shoulder and that diameter's distance from the cartridge head as the critical dimension. In cases without a shoulder, such as the 45 ACP, headspace is controlled by the dimension from the back edge of the cartridge case's head to its forward edge (case length).

A rebated (reduced) head case is basically a rimless case design that allows a large body case to be used with a bolt face designed for a smaller case. With this style case, the rim area of the case is substantially smaller than the case body. Examples of this style case include the 284 Winchester, and the 300 Winchester Short Magnum. Rebated cases always have an undercut at the rim/body juncture.

A belted case has an enlarged band at the head of the case with an undercut to allow for extractor purchase. The length of the belt, much as the rim thickness of a rimmed case, is used to control headspace. As other chamber dimensions are less critical, often they are excessively large. Therefore, as with a rimmed case, this design may suffer excessive case stretching and expansion and thereby result in shortened case reloading life.

## Case Body Types

Cases come in three basic body types: straight, straight taper and bottleneck.

Straight cases originated with large caliber, low pressure cartridges designed for use with black powder. A typical cartridge of this type is the 45-70 Government. A straight case design is preferred for semiautomatic handgun cartridges. The 45 Auto is an example of this type case. Also, a straight case shape often is used for large bore cartridges to gain maximum powder space without requiring excessively large firearm actions; i.e. the 458 Winchester Magnum.

A straight taper case has a noticeable slight body taper. Examples of this type are the 38-55 Winchester and the 9mm Luger.

Bottleneck cartridges allow for the use of slower burning powders as compared to straight cases. This results in a higher level of cartridge efficiency, i.e. greater velocity with a given bullet weight. The 30-06 is a bottleneck case of the rimless type, the 30-30 is a bottleneck case of a rimmed design and the 284 Win. is a bottleneck case of a rebated rim type. Cartridges such as the 300 H&H Magnum and 375 H&H Magnum are bottleneck cases of the belted head design

### Case Strength And Failures

Brass cartridge cases have gone through almost a century and a half of evolution. As a result, today's cases have greatly increased strength and reloadability. Earlier types had a rather thin web at the interior base. A balloon-like hump was present in the base to accept the primer pocket. Such balloon head cases should never be reloaded as they are unable to withstand the pressures developed with modern ammo.

However, the reloader must keep in mind that the brass case is still the weak link in the reloading chain. Depending upon specific caliber, cases may vary enormously in strength. Some calibers are designed to handle very modest pressure levels while others were designed to withstand working pressures of up to 65,000 psi.

Sufficient strength is a vital requirement of any case to be reloaded. For this reason the reloader must detect and eliminate all weakened or worn out cases.

### Pressure Versus Case Life

Pressure development in a fired cartridge is essential. Without pressure the bullet could not be driven through the barrel. Nonetheless, pressure must be carefully controlled to insure that the safety limits of the case and firearm are not exceeded. Additionally, shot-to-shot pressure must be kept at a uniform level to insure consistent ballistic results.

Brass case reloading life is dependant on the level of pressure generated. All else equal, a cartridge that produces an average pressure of 40,000 psi. will be reloadable a great many more times than one that produces an average pressure of 60,000 psi.

### Pressure Too Low

If pressure is too low, the brass case may not fully obturate (expand to fit and seal the chamber). When this happens, some gas may blow by the case mouth and leave a sooty deposit on the outside of the case body. (Note: some deposit and discoloration on the neck area is normal even when pressure levels are appropriate.) Excessively low pressure often will allow the primer to back part of the way out of the primer pocket because there is insufficient pressure to force the case head fully to the rear. This condition should be avoided as in extreme cases it could cause gas to flow into the shooters face.

### Pressure Too High

High pressure causes a case to age quickly. Case stretch, and hence the frequency of case trimming, increases as pressure goes up. Primer pockets also enlarge as pressures go higher.

When pressure is too high, rapid or even sudden case failure will occur. Some failures can be catastrophic, causing firearm damage and even personal injury - or worse.

**SEVERE DANGEROUS CONDITIONS**

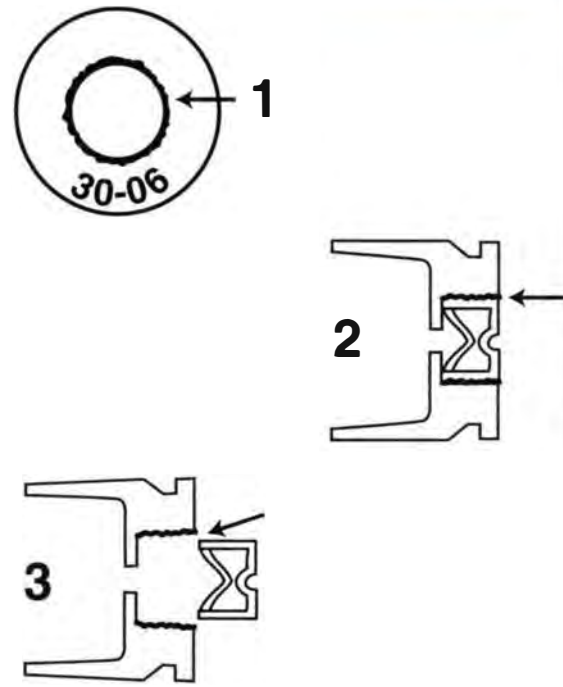


1. Dark smudge line around primer indicates gas leakage.
2. Pocket opens, leaving primer loose. A dark smudge, indicating gas leakage, is usually present.
3. Pocket opens completely, freeing the primer. A dark smudge, indicating heavy gas leakage, is usually present.

Gas leaking at the primer pocket (seen as a sooty deposit around the fired primer) or primer pockets which enlarge so much as to allow the primer to be blown partially or completely out of the case are sure signs that something is drastically wrong and creating very excessive and dangerous pressure.

Should you encounter a case in which the primer seats more easily than normal, the case must be discarded. This condition occurring on several cases, after only one or two firings, should be considered an indication that your load is developing very excessive chamber pressure. However, as cases reach the end of their useful reloading life this condition may occur naturally. When you have discarded 5% of a lot of brass because of too-easy primer seating, it is time to discard the entire lot.

**CAUTION**: Never reload any case in which the primer seats too easily. Such a case is a needless hazard and should be discarded. (Note: This condition can also occur with undersized primers.) Keep in mind that a few leaky primer pockets can ruin your bolt face. The escaping gases will cut multiple dimples into the bolt face. Worse, a blown primer can cause shooter injury.

The normal pressure generated in a cartridge at firing is part of the gradual deterioration of a case's useful reloading life. The actual amount of chamber pressure can cause a notable change in useful case life. Some time back, we separated a lot of brass into two portions. The first was used for a full-power hunting load with a chamber pressure of approximately 52,000 copper units of pressure (c.u.p.). These cases were fired five times before we deemed it advisable to discard the lot.

The cases in the second portion were loaded as light target loads with a chamber pressure of just over 40,000 c.u.p. These cases were fired eight times without any sign of deterioration. Indeed, they required only two trimmings during our test.

### Cases From Questionable Sources

The next time you see some fired cases for sale, you may want to think twice before taking them to your reloading bench. Usually, there is no way you can be absolutely sure of: their general condition as it relates to age, number of firings, number of times trimmed, the headspace of the gun they were fired in, the pressures generated at firing, or any other abuse the cases may have suffered.

Even if the source is sure that all such cases are from the first firing of factory ammo, it will be impossible to be certain of the headspace of the firearm in which they were fired. Additionally, if but one old worn-out case was mistakenly picked up off the range with the once-fired cases, you will be reloading a potential accident. Keep in mind that modern case cleaning methods can make even old, worn out, cases look like new.

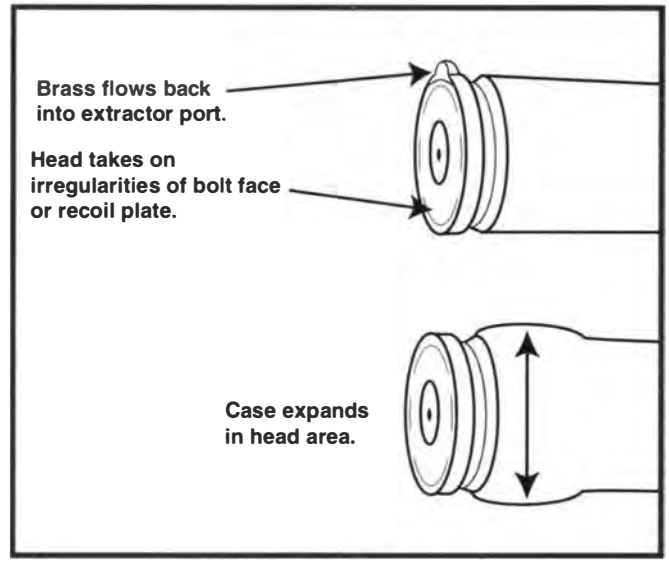


*Very high and dangerous pressure can distort case shape.*

**CAUTION:** Load only cases which you have obtained as new unfired brass or which you have on hand as the result of firing new factory ammo in the firearm for which you wish to reload. A few pennies saved on bargain so called "once-fired" brass makes little sense when one considers the cost of a firearm and/or medical treatment, or worse. Stay with new cases and keep the selection of brass worry-free and safe.

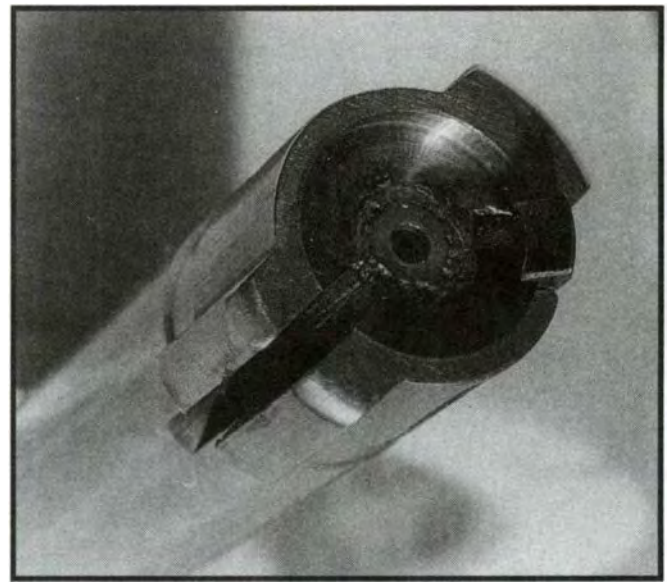

*This bolt face was ruined by gas leaking around a primer pocket.*

### Case Deteriorating Conditions

Worn cases most be avoided. Doing so means you must keep in mind that there are many factors that wear brass out. Brass case failures can be caused by:

1. Firing in chambers having excess headspace.
2. Using loads that develop excessive pressure.
3. Too many firings.
4. Trimmed too often.
5. Becoming brittle simply due to aging.
6. Being resized in a faulty sizing die.
7. Improperly adjusted or faulty full length sizing dies.
8. Excessive crimping.
9. Other less common factors.

### Case Head Separation

The separation of the case head from the body, called case separation, is a potentially dangerous condition. It is caused by the weakening of the case due to a thinning of the brass at the junction of the web and sidewall as a result of case stretching. Separation is sometimes preceded by a telltale bright ring, just in front of the case web, encircling part or all of the fired case's circumference. This condition is called incipient case separation. The next degree of failure could be a partial splitting of the case along the bright line. The final phase of failure is complete case separation.

Note: Actual separation failure of a case may not occur in steps as outlined. Incipient case separation can occur without early warning signs. In a separation situation, if the rear section of the case has sufficient flexible material to obturate and seal the chamber, no permanent damage will occur. However, if the rear portion of the case fails to seal the chamber, gases escaping rearward have the potential to damage the gun or injure the shooter.

Every reloader should learn to detect incipient case head separation the slightly lighter coloration of a ring-like area partially or fully encircling the case at the web/body junction. This discoloration often precedes the tell-tale bright ring or actual case failure.

Note: Premature case separation can also be caused by firearms having excessive headspace or faulty reloading dies.

*Incipient case separation is to be avoided at all cost. Shown are cases with the bright ring that warns case separation is about to happen. These cases already have been loaded several times too often.*

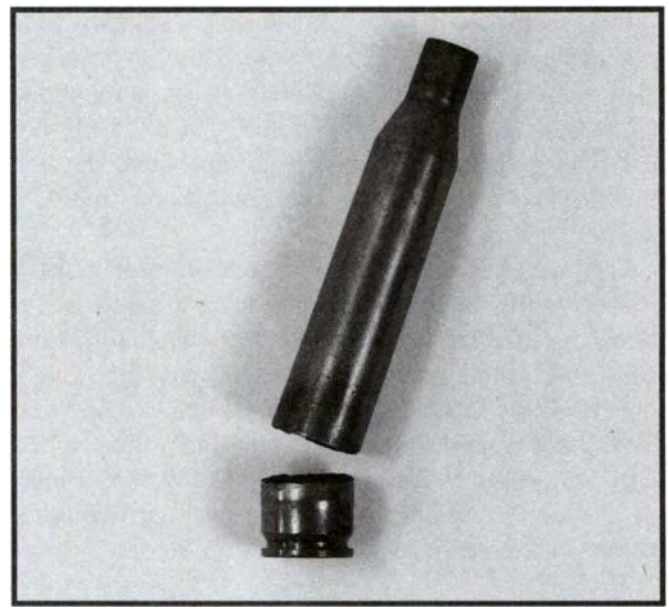

*This case suffered complete separation. Such occurrences can be catastrophic to shooter and firearm.*

### Cartridge Case/Firearm Headspace And Headspace Gauges

The headspace of a cartridge/firearm relationship is very important. Headspace is a measurement of the distance between the headspacing surface of a cartridge (when the case is fully rearward in the chamber) and the headspacing surface of the chamber. Rimmed cartridges use the edge of the rim as the headspacing surface while rimless cartridges most often headspace from a mid-point on the case shoulder; both in relationship to a corresponding chamber surface. The headspace surfaces of a belted case system is the forward edge of the case belt and the corresponding chamber surface.

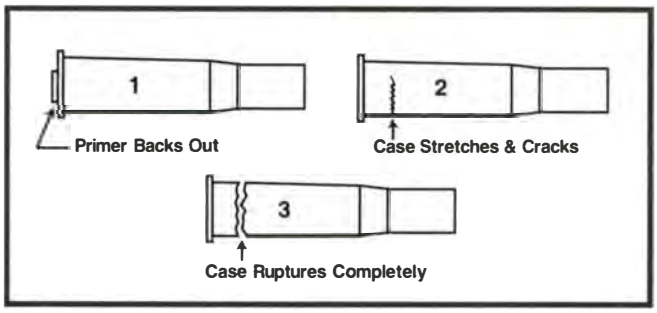


*The above illustrations are indications of excessive headspace. Do not use any firearm which shows such signs of headspace problems.*

If the distance from the cartridge's headspacing surface to the matching chamber surface is too great, the cartridge/firearm system is said to have excessive headspace. When this condition is present, the case is inadequately supported by the chamber and the cartridge may stretch excessively, split, or burst, upon firing.

Case headspace gauges will allow the reloader to adjust full length resizing dies so that the fired case will be shortened only a minimal amount during the reloading process. This will help prevent case separation failures. However, if a chamber is excessively deep, no amount of die adjustment will prevent premature case failure as the case will be stretched beyond reasonable limits on its first firing. Gauges made for cartridges that headspace on the shoulder, rim, or case mouth are of a fixed type. Gauges for belted cases are adjustable. Case headspace gauges are available from several manufacturers including Lyman. Ideally, every ammo assembler should have a case headspace gauge and a firearm maximum headspace gauge (a no-go gauge) for each cartridge reloaded.

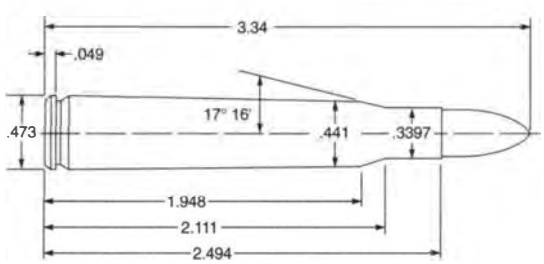


*Case measurements are critical to ammo performance and safety. Checking the resized case for overall length and maximum headspace is essential during every reloading of the case.*

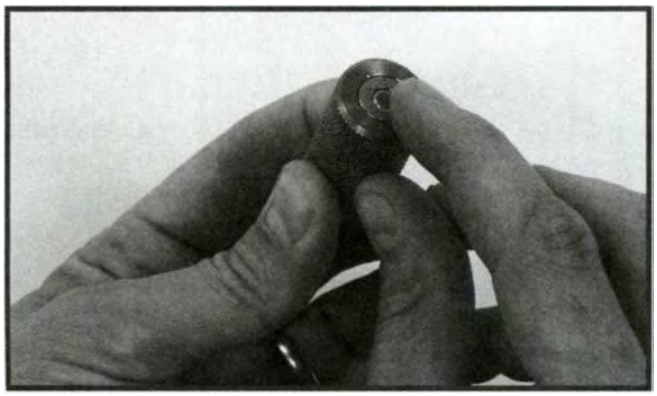

*Cartridge headspace gauges can help avoid case failures.*

## Case Resizing And Case Life

Some firearm chambers are overly large with respect to diameters, especially older military rifles. Full-length resizing cases fired in such a chamber will work the brass excessively. This will lead to premature longitudinal splits on the case. Sometimes such a problem can be eliminated by resizing only a short portion of the case neck. (Neck sizing dies are available for most cartridges.)

Reloaders sometimes opt for neck sizing based on expected increased case life. With normal chambers, neck sizing versus full length sizing offers little case life advantage. Thus, Lyman suggests full length resizing as the norm, especially for hunting loads where smooth feeding, chambering, and extraction are important.

Case necks will eventually become work hardened and begin to split. This will begin to occur after the identical number of reloads whether the cases are neck sized or full-length sized. Some sources suggest that case life can be lengthened by annealing the neck portion of the brass. By the time a case needs annealing at the neck, other factors will have brought about the end of the case's useful safe reloading life. It is almost impossible for the reloader to control and maintain the precise temperature required for proper annealing. Therefore, Lyman cautions against attempts to anneal case necks.

*Split cases must be culled from the cases to be reloaded.*

### Case Life is Limited

Even with the best of reloads and tight headspacing, brass cases will reach a point when they are no longer safe to reload. Thus, every reloader must have a good working knowledge of: the number of times a case has been reloaded, the factors which use up a case, and specific potential problems to be addressed during case inspections.

Experienced reloaders can sometimes obtain an incredible number of firings from each case. However, under ideal conditions, the average reloader should consider eight firings as a safety limit for rimless case life. Reloading a case more often may needlessly expose oneself to the danger of a sudden and dangerous cartridge case failure. Even the most expensive brass is comparatively cheap when used over a case life of eight firings. Don't forget to count the first firing of factory ammo as part of your case's safe reloading life.

Keep in mind that if maximum loads are routinely used, case life will be shorter - a good safety limit would then be about five firings.

Belted cases have a shorter case life. Generally, belted cases should be loaded no more than two or three times. This short useful life can sometimes be stretched a firing or two by using an adjustable cartridge headspace gauge to set up the resizing die. The short reloading life of belted cases is due to the overly long chamber dimensions that often occur in firearms so chambered and the higher pressures often used with these calibers.

Rimmed cases are often associated with firearms having large chambers. As a result, such cases most often provide a useful case life falling between rimless and belted cases.

## STEP BY STEP CASE PREPARATION

To a great extent, the safety and performance of your reloads depends on how you process your cartridge cases. The following outlines many of the important aspects of processing brass cases.

### Segregate Cases By Lots

All new brass, or cases saved from the firing of factory ammunition, should be segregated into homogeneous lots. Lot numbers are usually stamped, printed, or embossed on the factory box of loaded ammo. These numbers are generally found on an inside flap or the rear panel. Brass purchased in bulk may lack a lot number. In this instance, the reloader should place an assigned lot number on each box or original packaging.

Case lot segregation is essential to uniformity of ballistics and accuracy, but more significantly to allow you to know when discarding of the brass is required. Always process cases as a homogeneous lot. Never mix cases from one lot with another.

### Case Inspection

The reloading operation always begins with case inspection. This is necessary to help ensure the safety and reliability of reloaded ammunition. Great care and sufficient time must be expended in the inspection process. Look carefully for any of the following:

- Cracks and splits.
- Dents.
- Perforations or burn throughs.
- Partial head separation (or any tell-tale early warning sign of eventual head separation).
- Corrosion.
- Gas leakage around primer pocket.
- Missing, backed out, or loose primer.
- Abnormal case bulging or swelling.
- Case brass extrusion into ejector or extractor cuts of bolt face.
- Any other condition that suggests less than normal firing conditions.
- Foreign material in case.

Note: Case inspections must be repeated after each loading step as cases can crack, split, suffer bent rims, or incur other damage during the loading process.

Note: Bent rims are an often overlooked cause for difficult chambering. Bent rims are usually caused by insufficient sizing lubricant resulting in undue force being applied to the rim when withdrawing the case from the sizing die.

### Case Cleaning

After inspection, all cases must be cleaned. This is accomplished by simply wiping each case with an absorbent rag to remove any grit and grime that could destroy the fine polish of the resizing die. It is good practice to again inspect the case after wiping it clean.

Many reloaders prefer to restore their cases to the shiny appearance of new cases. This is accomplished by using one of Lyman's Turbo tumblers. After using a tumbler it is important to insure that all polishing media has been removed from the inside of the case.

*Case tumblers are an excellent way to clean your cases and make them look factory new.*

### Case Resizing

The next step of the process is to restore the fired case to factory-like dimensions. Naturally, this step is not required when loading brand new cases. Case resizing is generally accomplished in one of the two types of resizing dies. Full length resizing, the method most often used and recommended, restores the entire case back to near factory dimensions. Neck sizing is a method sometimes used for benchrest shooting. When neck sizing, the entire neck, or optionally only a portion of it may be reformed, but the case body is left as fired.

*If excessively lubed, cases may dent during resizing, especially on the shoulder area.*

Cases can be damaged during resizing if care is not taken. For example, the use of too much resizing lubricant can cause dents to be formed on the case, especially on the case shoulder. Or, the case mouth might be ruined if the case does not enter the sizing die correctly aligned. Case necks, and to a lesser extent case bodies, can crack and split due to the stresses of resizing. If cases are neck expanded in a separate die, splits may form during this operation.

After sizing, all traces of resizing lubricant should be removed by carefully wiping each case with a clean absorbent rag. Now is the time to perform the important second case inspection.

### Case Primer Pocket Cleaning

During resizing, the fired primer will be removed. The now exposed primer pocket will show varying amounts of a carbon-like deposit. If this deposit is heavy, it will interfere with the proper seating of the new primer. A few quick twists with a primer pocket cleaning tool or brush will rid the primer pocket of any such firing residue. Omitting this important step can lead to the danger of high primers, or less than hoped-for accuracy. Take care not to use undue or excessive methods as removal of brass from the primer pocket wall must be avoided.

*This is the result of resizing unlubed cases. Dies can be damaged when the stuck case is attempted to be removed improperly.*

### Case Trimming

Cases stretch when fired and again when resized. An overly long case will cause difficult, or actually prevent, chambering of a cartridge. Additionally an excessively long case can cause a potentially dangerous increase in chamber pressure when a cartridge is fired. Therefore, after resizing, the reloader must measure the length of every cartridge case.

Case measuring is usually accomplished by adjusting and locking a vernier or dial caliper at the maximum case length as listed in the data section for each specific cartridge. Then slip each case between the measuring jaws. Those that will not fit require trimming. Case length gauges and most cartridge headspace gauges are also used to find cartridges that need trimming.

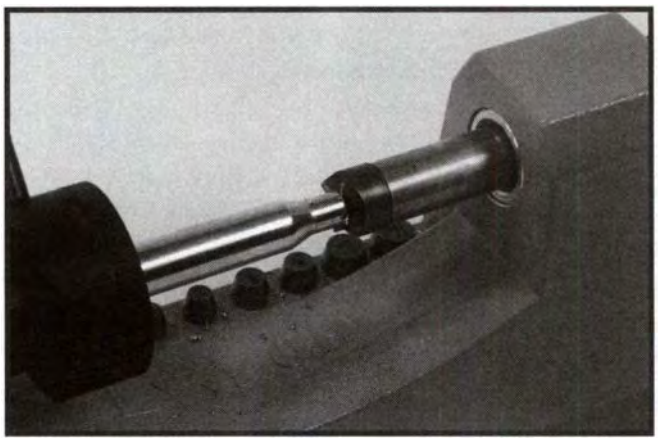

*Case trimming is done with various types of case trimmers. Hand operated trimmers are the most common type used. Never trim any case more than 4 times.*

It is important to keep careful records of the number of firings and trimmings of each case. Therefore, to prevent mix ups, it is best to trim the entire lot of cases when one or more show the need for trimming.

Cases are trimmed to the suggested trim-to length (as listed in the data section for each cartridge) using a small lathe-like trimming tool. After trimming, the case mouth must be deburred. A deburring tool quickly removes burrs from both the inside and outside of the case mouth. The concave end of the deburring tool cleans up the outside edge of the case while the convex end removes burrs from the inside edge. Lyman also offers a tool that will deburr both on the inside and outside surfaces in a single operation.

Lyman makes several style trimmers. The most popular of these is the Universal trimmer. This model has a patented chuck head which eliminates the need for various size collets or shell holders to retain the case. A power driven version is available for high volume users. Reloaders on a budget might prefer the economical AccuTrimmer.

**CAUTION:** With each trimming you may remove from 0.005" to 0.015" of material. After the fourth trimming, a total of as much as 0.060" of material will have been removed from the case. All this material has flown from the juncture of the case web and body. This leaves the case substantially weakened at the web/body juncture. Therefore, never trim a case more than four times. When a fifth trimming is needed, discard the entire lot of cases. If case stretching is excessive, fewer firings will be appropriate.

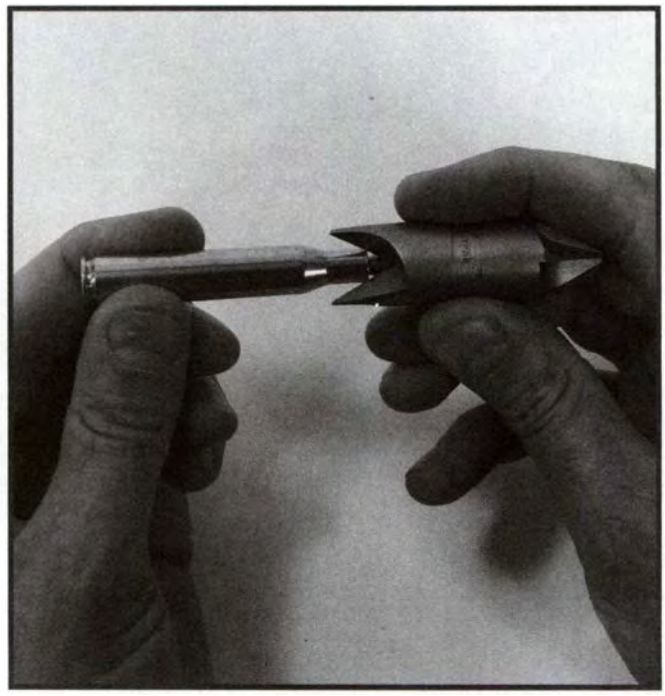

*Deburring of both the inside and outside of the case neck must be done after each trimming.*

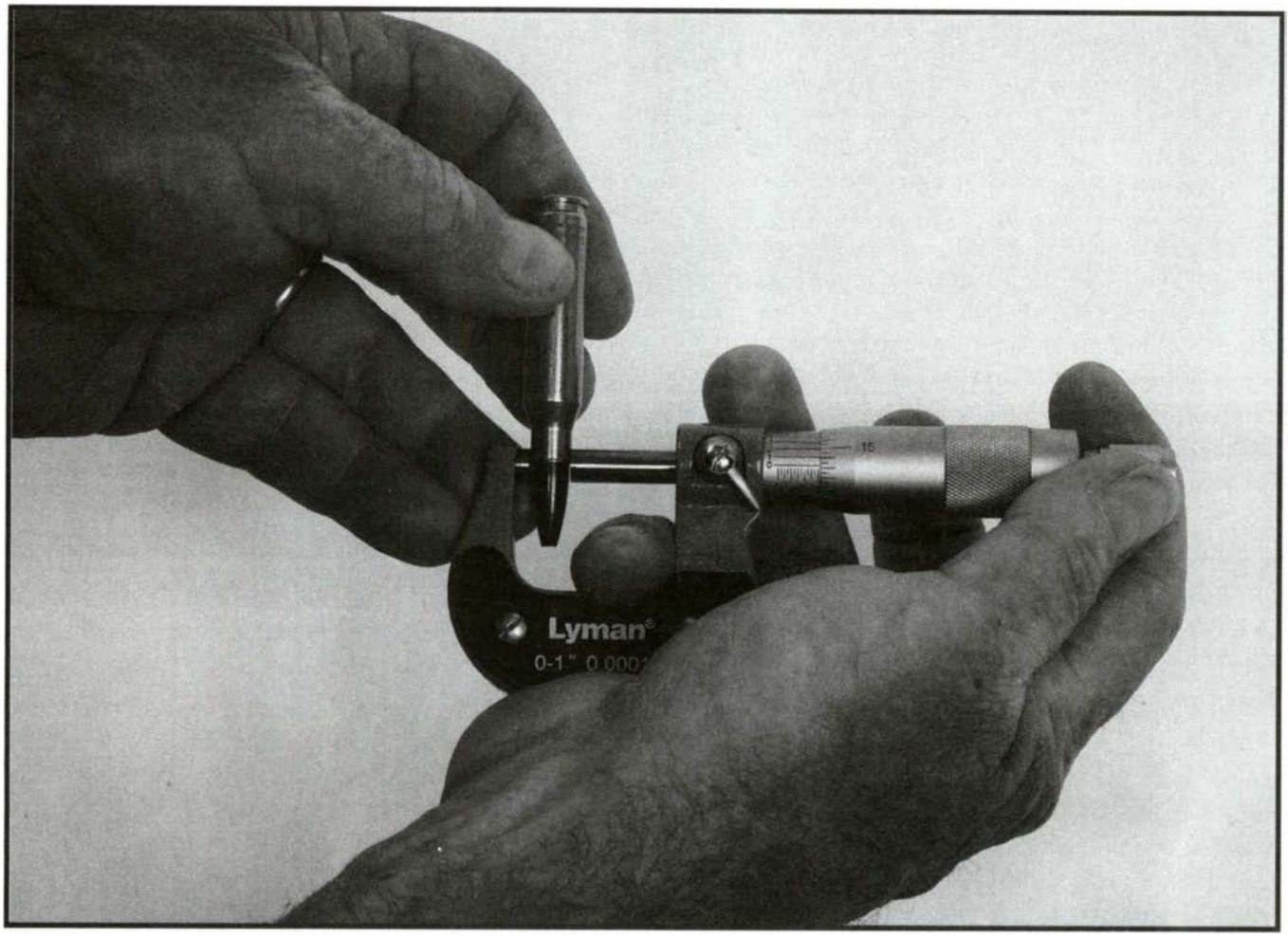


*Measuring the neck diameter of a loaded cartridge is an important safety step.*

### Case Necks Grow Thicker

The walls of a case become thinner as it stretches from repeated firings and resizing. As a result, the neck section will thicken because of the forward brass flow. This thickening can eventually produce a loaded round with an outside neck diameter that is incompatible with the firearm chamber. When a loaded round fits snugly into the neck area of the chamber, upon firing the brass will be unable to expand sufficiently to insure an uninhibited bullet release and thus chamber pressure goes up higher than anticipated, perhaps even dangerously.

The outside case neck diameter of a loaded round should be given the same amount of consideration as case length. Loaded round maximum neck dimensions are shown on the various cartridge drawings that appear at the beginning of the data for each specific cartridge. Take the time to measure a sampling of your ammo after seating the bullet. Generally, your loaded round neck diameter will be well below the maximum. Should case neck diameter begin to get close to the maximum, it is evidence of heavy brass flow from the case body. The wise reloader will then discard the entire lot of brass.

**WARNING:** Case neck turning equipment is designed to be used with new cases for the improvement of accuracy or the fitting of cases to special dimension chambers that sometimes occur with custom chambered benchrest rifles. This equipment may also be used when reforming new brass of a specific caliber to another caliber (not a undertaking for any but the most experienced persons). Case neck turning equipment is not intended for use in prolonging case life by the turning of overly thick necks.

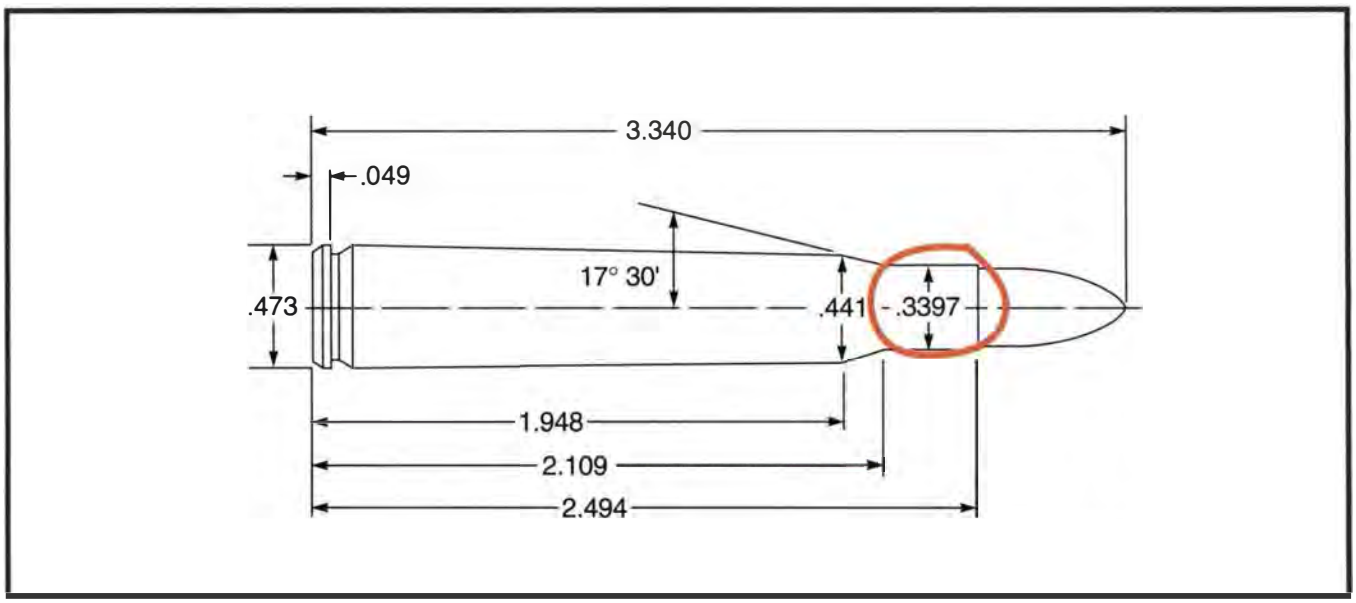


*The proper reference for loaded round MAXIMUM outside-neck diameter is included in the cartridge drawing shown at the beginning of the cartridges data listing.*

## Case Forming

Reloaders sometimes choose to make brass of a given caliber from brass of a different caliber; for example, reforming 308 Winchester (7.62 NATO) cases into 243 Winchester cases. At first, this may appear to be a simple matter of necking down the larger case by running it into the smaller die. However, such a simplistic approach can lead to serious problems.

When reforming cases to a smaller caliber, all of the material in the larger diameter neck must be moved into the smaller diameter neck. This will invariably result in an increase in the smaller caliber case neck wall thickness as well as an increase in neck length. The extra neck length, of course, is trimmed away. But the increase in case neck wall thickness is often overlooked.

As stated, increased neck wall thickness can result in a loaded round outside neck diameter that exceeds the maximum allowable dimension. Then, the safety of the load is compromised as the case will fit the chamber so tightly that proper bullet release cannot occur at firing. When using reformed cases, careful measuring of the outside neck diameter of loaded rounds is essential. If a sample round exceeds the maximum allowable dimension, then the case necks must be turned until they are of appropriate dimension.

Case forming of a small caliber to a larger one is also sometimes undertaken by reloaders - for example necking up 30-06 cases to 35 Whelen cases. Necking up will noticeably thin the case neck. This can result in poor die performance, poor bullet retention and premature neck splitting.

Most brass can be purchased, in bulk, at a low enough price to make case alteration less than practical. If one places no value on the required time, the altering of cases may seem appealing. However, we strongly suggest that the reloader consider the hazards involved. In addition to the already mentioned hazards, there is the negative safety factor involving the use of cases with the wrong headstamp, as well as problems caused by a loss of proper case body graduated annealing (when resizing to a shorter cartridge).

Case forming sometimes can make sense, for example, when brass of a specific caliber is not generally available. Then, when undertaking the task, follow all the precautions we have mentioned and all of the instructions supplied with the reforming die set.

**Military Cases Caution:**

Military ammo frequently is loaded with cases having thick walls to help avoid case failures in extreme conditions such as rapid or full automatic fire. This increased case wall thickness results in a smaller case volume. Such cases will develop higher chamber pressures when loaded using data developed in standard higher volume commercial brass. This increase in chamber pressure can be notable, even dangerous. For this reason we advise strong caution be used if military cases are reloaded.

**Case Savvy**

Cases are the weak link in the control of chamber pressure. Every effort must be made to insure that each case used is suitable for another firing. Exacting case inspection cannot be overstressed. If there is any doubt with respect to case reusability - crimp it shut with a pair of pliers (to prevent later inadvertent usage) and throw it out. Remember that case inspection must continue throughout the loading process. After the initial inspection, cases should be looked over after each operation. Did the case crack, split, or deform during sizing? If neck expanding is done separately, did any cracks occur during this operation? Did the primer seat too easily? Or perhaps did the case mouth split during bullet seating?

Safety of a reloaded cartridge will always hinge heavily on the condition of the brass case. The reloader must always assure the case's suitability with careful and repeated inspections. The time spent so doing is part of what makes a knowledgeable and conscientious reloader.

Obviously, safe case handling demands that accurate records be kept with regards to the number of firings, the likely pressure levels (max vs. less than max), and the number of trimmings. Also, it is recommended that you keep records on the number of cases discarded due to brass failures. When 5% of the cases in a lot have been discarded it is time to summarily discard all the remaining cases in the lot. Doing so will help eliminate sudden and catastrophic case failure. Remember, when in doubt, throw it out.

## U.S. BOXER PRIMER CHART

| | Large Rifle | Large Rifle Magnum | Small Rifle | Small Rifle Magnum | Large Pistol | Large Pistol Magnum | Small Pistol | Small Pistol Magnum |
|---|---|---|---|---|---|---|---|---|
| Remington | 9 1/2 | 9 1/2M | 6 1/2<br>+7 1/2 | | 2 1/2 | | 1 1/2 | 5 1/2 |
| Winchester | WLR<br>(8 1/2-120) | WLRM<br>(8 1/2M-120) | WSR<br>(6 1/2-116) | | ++WLP<br>(7-111) | | WSP<br>(1 1/2-108) | WSPM<br>(1 1/2M-108) |
| Federal | 210<br>+210M | 215<br>+215M | 205<br>+205M | | 150<br>+150M | 155<br>+155M | 100<br>+100M | 200<br>+200M |
| CCI | 200<br>**No.34<br>BR2 | 250MAG | 400<br>*No.41<br>BR4 | 450MAG | 300 | 350MAG | 500 | 550MAG |

** Mil-spec small rifle primer* *+ Match version* *++ Also may be used for Magnum , Large Pistol loads.*
*** Mil-spec large rifle primer*

Primers are tiny components, requiring only brief handling and they seem to always work. Because of this, primers and the priming operation often are given no more than passing thought. However, there are aspects of primers and priming that the conscientious reloader must consider.

### Mercuric Primers Are Ruinous

Until the late 1940's commercially produced ammunition often used primers containing fulminate of mercury. Upon firing, the mercury from the primer was driven deep into the brass case's grain structure causing its breakdown and a resulting embrittlement. Cases fired with mercuric primers are never suitable for reloading.

Mercuric primers were available to reloaders from retail component outlets as late as the mid-1950's. Many reloaders continued to use existing stocks of mercuric primers for ammo assembly into the early 1960's. Undoubtedly, there were mercuric primers in occasional reloading use for perhaps still another decade - until sometime in the 1970s. Since it is usually impossible to be sure that mercuric primers have not been used, brass of unknown vintage, should never be reloaded.

### Primer Sizes

Boxer type primers are made in four basic sizes which include large rifle, small rifle, large pistol, and small pistol. Magnum versions of each of the basic four sizes are also available. Primers are also available as benchrest types. Substantial differences in dimensions, cup hardness, priming pellet weight, and priming pellet composition may occur with each size and type.

The selection of a primer size or type for a new cartridge is sometimes based on specific ignition or firearm characteristics. As example: very large rifle cases and their corresponding difficult to ignite heavy powder charges may demand the heaviest possible primer pellet thereby making large rifle magnum primers a must. Another example: As it was originally envisioned, the 40 S&W cartridge had a large pistol primer. When a loaded round was ejected from the chamber of the firearm to be used, the live primer would impact the ejector. This posed the problem of possible ignition of the unchambered round. Hence, a small diameter primer was substituted in order for this cartridge to safely function in the intended firearm.

Primer and firearm manufacturers have carefully worked out the nuances of primers and the reloader need not be concerned with specific differences so long as the correct size and type primer is used. The correct primer choice is listed in the data section for each specific cartridge. To show the broad range of availability, the nearby primer size chart lists the current selection from the major suppliers.

### Primer Makeup

The compound used in many primers is basically made by sulfonating resorcinol with sulfuric acid. Then, nitric acid is used to nitrate the compound to form trinitroresorcinol, commonly known as styphnic acid. This acid is then treated with lead nitrate under precisely controlled conditions to form the lead styphnate salt. Several forms of this salt are used in priming compounds, the most common being "normal" structure. Another type used by one manufacturer is called "basic" structure.

*The boxer type primer is used in all American metallic cartridges. The battery cup primer used in shotshells is of the same basic design, but contains an extra cup to facilitate its use in the less rigid shotshell case. The antique berdan type primer functions in the same manner as the Boxer type, but with this primer the anvil is actually part of the case.*

Manufacturers add fuels (such as tetracene and barium-nitrate) and other materials including small amounts of aluminum or glass to enhance specific desired characteristics and sensitivity. Magnum primers may use heavier pellet weights and a somewhat different primer mix formulation to obtain desirable ignition characteristics for heavy difficult-to-ignite propellant charges. Obviously, a lot of thought and effort goes into the manufacturer of primers.

Lead free primers are a relatively new type. These have been developed and produced to enable the manufacturers to offer an environmentally safe primer. Such primers have special appeal for those who shoot on indoor ranges which lack ideal ventilation.

## Primers Effect Ballistics

Specific primers may not always be suitable for the ignition of large powder charges. One primer may cause a misfire wherein the powder becomes scorched but fails to fully ignite and burn properly; or it may cause a hangfire (delayed ignition, sometimes with an audible pause between firing pin strike and ignition). Should either condition occur, immediately discontinue (do not attempt to fire even one more round) the use of that primer with the cartridge being used. Such ignition characteristics are extremely hazardous and can cause damage to firearms or worse.

Note: These conditions can also be caused by excessively compressed powder charges or a too-low powder loading density. Of course firearm problems can also be at fault.

The variations in primer sizes or types can create substantial variations in ballistic uniformity. For example: In one primer test, extreme velocity variation was an excellent 38 fps. With another brand primer, the extreme velocity variation was a poor 133 fps. Pressure comparisons for the same test loads showed spreads of as little as 3,500 psi. with the first primer and a very poor 9,300 psi with the second primer. Obviously, varying the primer can result in noticeable performance variation, ranging from ideal all the way to undesirable.

| | Velocity fps | Pressure psi |
|---|---|---|
| Rem. 9 1/2 | 2509 | 52,800 |
| Fed. 210 Match | 2508 | 53,100 |
| CCI 200 | 2526 | 54,000 |
| Win. WLR | 2539 | 54,700 |
| CCI 34 | 2545 | 55,400 |
| **Total Spread** | **37 fps** | **2,600 psi** |

*The above results were obtained by using the exact same 308 Win. load and only changing the primer. A change in primer will change the ballistics of a load, so we recommend that new reloaders use the exact components listed in our reloading data.*

Nonetheless, is not possible to state that one specific primer does a better job than another. A given primer might perform poorly with a specific load in one caliber, satisfactorily with a second load in another caliber and outstanding with a third load in still another caliber. The point is that primer testing can be an important part of fine tuning any load.

## Primer Seating

Primers are manufactured with the anvil having minimal contact with the priming pellet. In this condition primers are not sufficiently sensitized for ideal ignition. Further compression of the priming pellet by the anvil, during proper seating of the primer in the cartridge's case, completes the desired sensitizing of the primer.

Properly seated, the primer cup will be below flush of the case head and within a specific tolerance range. Such positioning will insure that the anvil is lightly pushed down into the primer cup to properly stress the priming pellet. Most primers should be seated 0.003" to 0.005" below flush. If the reloader endeavors to seat primers at a nominal depth of 0.004" below flush, normal variations found in primer heights and primer pockets will generally result in seating depths within the suggested tolerances.

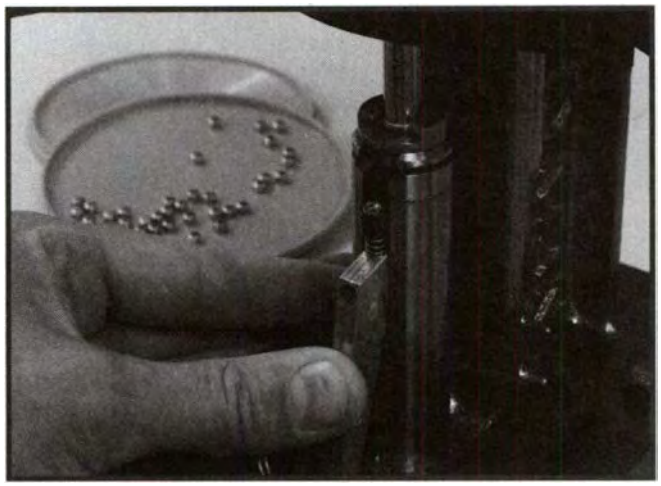

*All presses come with a basic priming set-up. This turret press uses the "feel" method for priming (see text).*

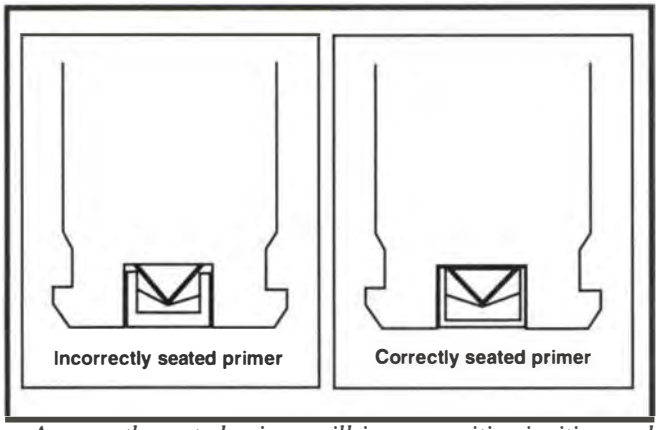


*A correctly seated primer will insure positive ignition and the best ballistic uniformity. An improperly seated primer will result in unreliable ignition and poor ballistic uniformity.*

**CAUTION:** Always wear safety glasses whenever handling primers.

Seating primers flush, or somewhat above flush, will fail to move the anvil sufficiently into the primer cup and thus the primer pellet will not be properly stressed. This sets the stage for misfires or erratic ignition.

**WARNING:** A primer that is above flush of the case head can be accidentally ignited by bolt or action parts during feeding. If ignition occurs before the action is closed and locked, the results can be catastrophic to firearm, shooter and bystanders.

The opposite condition, excessively deep primer seating, also can cause unwanted problems. The primer cup can collapse when seated overly deep. This condition can result in gas blow-by between cup and case. Serious bolt face erosion can then occur. Excessive stressing of the primer pellet can cause the primer to become overly sensitive. This might lead to ignition as a result of rough handling of the loaded ammo. Additionally, if a primer is seated to deeply, the priming pellet may crack as a result of excessive compression by the anvil. A cracked pellet may fail to ignite - a misfire. Excessively deep primer seating can also cause ignition during the priming operation.

Commonly, deep seating of primers causes ignition failures attributable to the firing pin not being able to strike the primer with adequate force.

Many reloaders prime by feel, that is they seat the primer until the cup is felt to bottom in the primer pocket. This method can result in unnecessary variation in primer seating depths. Due to the long chain of parts consisting of: tiny anvil, primer cup, cartridge case, priming punch, tool linkage, tool handle, and the operator's hand, it is difficult to precisely apply uniform pressure to the seating tool handle while attempting to "feel" the primer cup bottoming in the primer pocket. Seating by feel is also subject to variations in the primer cup fit in the primer pocket, and with any crud build-up in the primer pocket. The "feel" method is best left to the extensively experienced person using specialized tools designed specifically for the purpose. For most reloaders, the seating of primers by feel is simply a less than an ideal method.

## Ram Priming

Generally, the best method for seating primers is to use a positive mechanical stop to arrest the motion of the tooling used to move the primer into the primer pocket. Some presses are equipped with various types of mechanical stops for primer seating.

About as fine a mechanical primer seating stop as can be found occurs in the method often called ram-priming. Successful ram-priming can be accomplished on most presses. In this method, a priming station is assembled in the normal die position at the top of a press. The ram unit is adjusted so that the normal stop of the press linkage occurs when the primer is at the correct depth.

Note: It is a wise practice to seat primers twice. That is after seating, lower the ram slightly, then rotate the case approximately 180 degrees and then complete another primer seating stroke. This helps insure that primers are squarely seated.

A dial indicating caliper makes a useful tool for checking primer depths. Start with the rod end of the

*The preferred method for obtaining correct and uniform primer seating depths is to use a RAM Prime unit mounted at the die station of your press.*

caliper protruding about 0.015". Then place the rod against the primer while seating the base of the vernier against the case head. The primer seating depth (below flush) can then be read from the dial. Some practice is required to obtain accurate primer depth measurements.

Running a finger over the case head, after a primer has been seated to the correct depth, will give you a feel for a correctly seated primer. With practice, you will be able to "feel" when a primer has not been seated deep enough, when it is seated within an acceptable range, or if it is too deep in the primer pocket. At the beginning of each loading session, measure a sufficient number of primers to insure they are correctly seated. "Feel" each of these to establish a norm. Then "feel" each subsequently seated primer to insure none vary from the desired depth.

Important: Before beginning to prime, make certain all sizing lubricant is removed from all cartridge cases. Then wash and dry your hands thoroughly to prevent any possibility of primer contamination. Develop a priming routine that will keep primers from becoming contaminated. It is advisable to manipulate the press handle and the cartridge cases with one hand and use the other hand solely to pick up and place primers on the priming post. This method will give 100% assurance that your primers will fire as intended.

We strongly suggest that primers be handled manually. Place no more than 100, or the lesser amount of primers actually needed, onto a primer turning tray. Rotate the tray until all primers are oriented anvil-up. Then pick up one primer at a time for transfer to the priming punch for seating into the cartridge case.

## Caution: Primer Feeds Require Extreme Care

Primers, by nature, must be explosive. Despite this, handling primers one at a time is a safe procedure. However, primers handled in bulk are a potential hazard. Should you choose to use an automatic primer feed, extreme caution is required. There may be as many as 100 primers, each in contact with the next, in the automatic primer feed's magazine. Should one primer explode, all will do so spontaneously with disastrous results. Even a few primers exploding can cause serious property damage and personal injury.

Some very high volume reloaders feel an auto primer feed to be a necessary part of their equipment. If you think you number among these folks, use extreme caution when working with an automatic primer feed.

The SAAMI pamphlet "Sporting Ammunition Primers", cautions against the use of primer feeds unless adequate shielding separates the operator from the hazard of explosion. One major primer manufacturer has cautioned on their primer packaging against the use of any automatic primer feed. Obviously great care is required when using an automatic primer feed.

The use of an automatic primer feed unit demands an uncompromising light hand to prevent the crushing of a primer should a jam or malfunction of any type occur.

**CAUTION:** never push, bang, bump or otherwise apply any force to a primer or primer feed.

**CAUTION:** When using an automatic primer feed, at the first sign of a primer jam or difficult feeding - STOP! Then think about what must be done. Force

nothing and do not be tempted to even slightly jiggle the tool or any part of it. Rather, carefully disassemble the primer feed. First remove the primer magazine and all primers contained therein. Clear the jam, determine the cause for the jam, and correct the problem before proceeding with use of the primer feed.

**CAUTION:** Extreme care must be used when filling a primer feed magazine tube with primers. Never force a primer into the pickup tube. A pressure of no more than five pounds should be required for a primer to slip into the tube. Do not use any primer pickup tube requiring more than this amount of effort. Primers must be correctly oriented in the pickup tube. It is the user's obligation to insure that this is so. Misoriented (upside-down or standing on end) primers are a serious potential hazard. Never store primers in a primer feed tube. Return all unused primers to their original packaging. Do not force any primer feed tube-follower down onto primers

## Caution: Primers Can Dust

Primers can and do "dust". Minute amounts of priming mix will accumulate in the loading area, and on primer handling equipment, especially when an auto primer feed is used. An accumulation of priming dust is a fire and explosion hazard. Occasionally wipe off priming trays, priming tools and the work area with a damp cloth to reduce the likelihood of an accident. Rinse the wiping cloth thoroughly in running water to remove any primer dust it picks up. Be sure all cleaned surfaces are dry before bringing primers in contact with them.

The entire loading area and all equipment must be kept clean and free of any contamination by primer dust (as well as powder accumulations). Fired primers, separated cups and anvils, or any trace of hard or abrasive material can be the catalyst that causes primers, primer dust, or spilled powder, to ignite.

Pick up spilled primers immediately and be sure they are all recovered. Stepping on a primer may cause it to explode.

### Primers are Explosive

Serious thought must be given to primers with respect to care in handling and storage. First and foremost, it must be remembered that primers are designed to explode when the priming pellet is crushed between the anvil and the primer cup. This is accomplished by a percussion blow - the firing pin striking the primer cup and crushing it against the primer anvil.

**CAUTION:** Primers can explode if subjected to friction, percussion, crushing, or excess heat from any source, whether open flame or not. Static electricity and many other abuses may cause primers to explode.

The reloader needs to prevent primers from exposure to such things as hammering, impacts, or percussion blows of any kind, including bullet impact. Hot tobacco ash, sparks and a great many other abuses are to be avoided. In short treat primers as an explosive. Careful handling and storage is always a must.

Never transfer primers from their original factory container to any other container. Primers stored loose or in bulk, for example in a glass jar, and having contact one with another, can, and most often will, cause a violent explosion of the entire mass if but a single primer is ignited.

When priming, never take more than a single box of 100 primers to the loading bench. Pour out only the needed amount onto the primer flipper. After each priming session, immediately return any unused primers to their original packaging. This packaging is designed to prevent accidents even if dropped.

**CAUTION:** never decap live primers as doing so is hazardous.

### Primer Storage

Because of their explosive nature only an absolute minimum of primers should be kept in storage. The National Fire Protection Association's NFPA 495 states that not more than 10,000 primers should be stored in a private residence. This recommendation is law in most communities. Even a deeply involved reloader should have no reason to store more than 1,000 each of large rifle, large rifle magnum, small rifle, large pistol, large pistol magnum, small pistol, small pistol magnum, and shotshell primers. That's 8,000 primers. With care in replacing exhausted supplies, it is not difficult to adhere to the 10,000 primer limit. Most reloaders will be able to get along nicely with far fewer primers kept on hand.

Always store primers in a remote area away from any possible source of ignition including bullet impact. Be sure no heat, spark, electrical, percussion, or any other form of abuse can occur in the storage area.

Keep primers stored away from oxidizing agents, flammable liquids, and flammable solids (including handloading powders).

A storage cabinet is strongly recommended. A cabinet should be solidly constructed of 1" thick lumber to delay the transfer of heat to the contents in event of a fire or other mishap. Make sure the storage cabinet is remotely located with respect to trash, combustible materials, sources of heat (including the suns rays), open flames, electrical equipment, hot water heaters, mechanical equipment, furnaces, solvents, flammable gases, and so on. To avoid the potential of an unexpected or unusual accident, do not store anything else in the primer cabinet. Never remove more than 100 primers at a time from the storage area.

Naturally, never smoke around primers. No smoking signs in the storage area and at the loading bench are suggested.

A SAAMI bulletin entitled "Sporting Ammunition Primers: Properties, Handling, And Storage For Handloading" is available. Every reloader should acquire a copy from: SAAMI, 11 Mile Hill Road, Newtown, CT 06470 (www.saami.org).

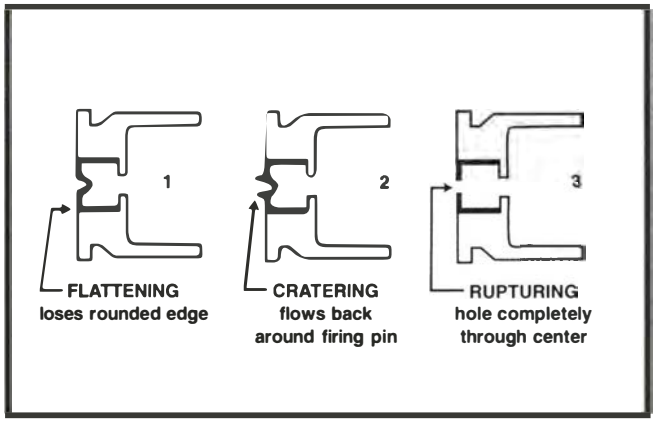


## Fired Primers And Excessive Pressure

At times, the condition of a fired primer may give indications that the load being used is creating excessive and hazardous chamber pressures. A primer that shows a black smudge around it is one indication of too much chamber pressure. So is a primer that is excessively flattened when fired, a condition in which the primer loses all of its rounded edge. A primer which craters or ruptures tells of very high pressures. The safe handloader always checks the condition of fired primers immediately after firing. The nearby drawing and photo illustrate tell-tale after-firing primer conditions.

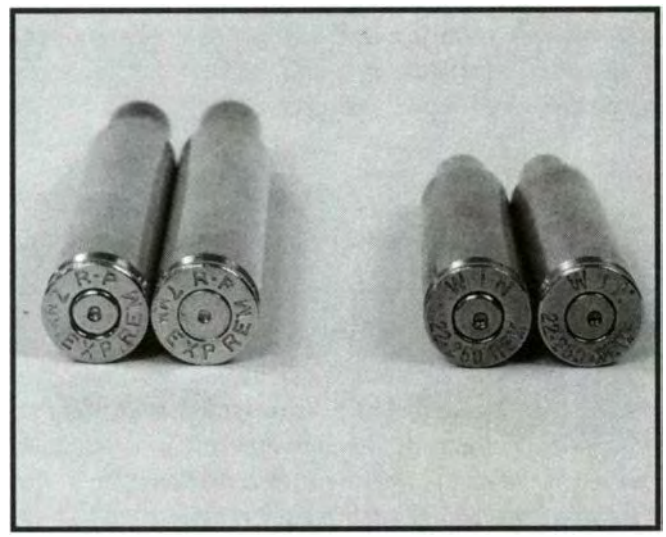

*The primers in the cases on the left of each pair show a normal pressure level. The primers in the cases on the right of each pair show signs of high pressure. Primer condition is only one pressure indicator that should be monitored carefully when developing reloads.*

With all of the foregoing in mind, it is obvious that giving a bit of thought to primer storage, handling, the priming operation, and primer condition after firing is essential. Proper primer consideration can result in more uniform ammo and help prevent accidents.

# Powders

*This is just a small selection of the more than 80 propellants we used to develop the data for this, our, 48th reloading handbook.*

**CAUTION:** All smokeless powders are flammable solids. They are designed to burn rapidly and to do so without the presence of oxygen - generating all required oxygen as they burn. Therefore, treat all propellants with the respect due a highly flammable substance.

## Selection Of A Propellant

There are more than 80 propellants listed in the data section of this manual. Each powder listed in our data meets our predetermined criteria for ballistic uniformity. Nonetheless, only a few of those listed will optimize ballistics and deliver tightest groups. Why then all those other powders?

One reason is reloader interest in safety. Many reloaders recognize that keeping only a few types of powder on hand helps to minimize any potential for using the wrong powder and keeps stored quantities at a minimum. These folks often select the propellant best suited to their most important application, and then use this same propellant in as many other cartridges as practical. Another reason is that not every propellant is available at every retail outlet. Individual firearms may not always deliver peak accuracy with the generally considered "best" powders. Trying several powders will often turn up one that will suit the odd performing gun. Additionally, some reloaders do not want the highest possible velocity. Others desire recoil reduction and some wish light loads for target practice. These are just some of the reasons for our extensive listings.

We list the propellant most likely to supply the best accuracy with a specific bullet in **BOLD** print. Sometimes the comments preceding the data for each cartridge will mention specific top performing propellants. Select your first powder from either the type listed in bold print or one mentioned in specific text.

**168 gr. Jacketed HPBT** — 3.300" OAL — **BC:** .462 **SD:** .253

| Powder | Sugg Starting Grains | Velocity fps | Pressure | Max Load Grains | Velocity fps | Pressure |
|---|---|---|---|---|---|---|
| IMR-3031 | 42.0 | 2463 | 34,000 | 48.0 | 2808 | 49,600 C |
| **IMR-4895** | **43.0** | **2444** | **35,500** | 48.5 | 2762 | 47,600 C |
| IMR-4064 | 45.0 | 2551 | 34,000 | 50.0 | 2816 | 46,700 C |
| AA2520 | 42.5 | 2383 | 36,200 | 48.0 | 2653 | 48,800 C |
| IMR-4320 | 45.0 | 2475 | 36,400 | 51.0 | 2816 | 50,000 C |
| RX15 | 47.5 | 2592 | 38,800 | 51.8 | 2832 | 50,000 C |
| AA2700 | 49.5 | 2475 | 41,800 | 55.0 | 2745 | 54,900 P |
| 760 | 50.0 | 2541 | 37,300 | 57.0 | 2839 | 49,700 C |
| IMR-4350 | 52.0 | 2590 | 38,000 | 57.0+ | 2873 | 50,400 C |
| RX19 | 55.0 | 2489 | 37,800 | 60.9+ | 2810 | 50,000 C |
| N160 | 55.0 | 2559 | 39,800 | 61.0+ | 2891 | 58,800 P |
| IMR-4831 | 54.5 | 2544 | 35,700 | 60.6+ | 2847 | 47,800 C |
| H-4831 | 55.0 | 2564 | 37,300 | 61.5+ | 2873 | 47,200 C |
| WXR | 55.0 | 2489 | 38,100 | 61.0+ | 2799 | 53,300 P |

*Our data section lists what may be the most accurate powder for a particular bullet in bold type.*

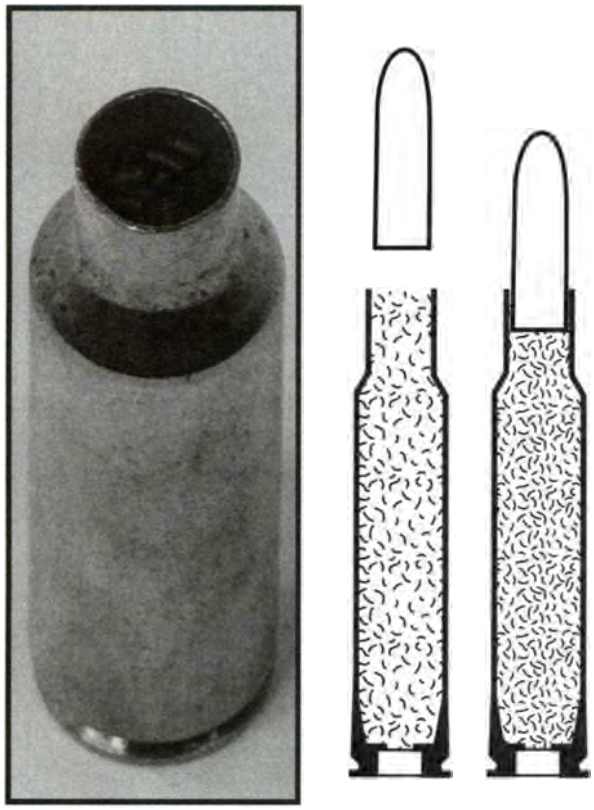

*A compressed load will require that you to verify that your components, methods and seating depth do not result in an excessive compression. See text for instructions on how to proceed with this determination.*

## Propellant Versus Case Volume

Generally, powders that give the best ballistic uniformity and accuracy are often those that nearly fill the case to the base of the bullet. Ideally, the reloader should chose a load that fills the case to at least 90% of capacity. This insures that powder positioning in the case will not cause substantial changes in the ballistics. It is not always possible to fill up 90% of case volume. However, when it can be done this is often part of a knowledgeable reloaders approach to powder selection.

**130 gr. Jacketed SP** — **BC:** .394 **SD:** .230
2.660" OAL

| Powder | Sugg Starting Grains | Velocity fps | Pressure P.S.I. | Max Load Grains | Velocity fps | Pressure P.S.I. |
|---|---|---|---|---|---|---|
| H-414 | 58.0 | 3122 | 58,400 | 61.0 | 3249 | 64,200 |
| IMR-4350 | 58.0 | 3057 | 54,300 | 61.0 | 3240 | 63,100 |
| N160 | 59.0 | 3095 | 57,000 | 62.5 | 3226 | 62,000 |
| RX19 | 63.0 | 3094 | 54,600 | 66.0+ | 3289 | 64,100 |
| **WXR** | 62.5 | 3031 | 53,000 | **66.0** | **3234** | **62,800** |

+ Designates a compressed powder charge

## Compressed Powder Loads

Many of the loads in this handbook are noted with a + sign indicating loads using compressed powder charges. This means that the propellant so fills the case that when the bullet is seated, its base packs the powder tightly into the case. If you seat bullets shorter or longer than we suggest, the amount of any compression can vary. The use of a different brand case may also alter any powder compression as some cases have larger volumes than others. The change you experience could range from no compression to excessive compression.

**CAUTION:** Avoid overly compressed powder charges. Excessively compressed charges will cause cartridge overall lengths to continue to increase after the loaded round is taken from the bullet seating die. This is caused by the elastic nature of the compressed charge trying to reduce compression by pushing the bullet upwards. This can lead to jammed firearms, erratic ballistics, poor accuracy and other problems.

To determine if the degree of compression is excessive, slowly seat the selected bullet in an empty case to the desired overall cartridge length. Carefully secure the seating screw to insure a uniform seating depth on succeeding rounds. Also be certain that the die body is locked in position. Make note of the overall length. Assume a potential variation of +/-0.010" as the total range to be encountered.

Then place the desired powder charge into a primed case. Let the powder charge pour into the case normally. With the previously adjusted bullet seating die, seat a bullet into the charged case. Without delay, measure and record the overall length of this round. If the charged cartridge's overall length is longer than the empty sample (not counting the tolerance of +0.010"), the loaded round has an excessively compressed powder charge.

If the loaded length is the same as the empty sample (within the tolerance of +0.010"), wait 24 hours and remeasure the loaded round. If it now exceeds the anticipated overall length, the load is excessively compressed.

Final verification requires assembling several boxes of ammo, checking each round for overall length immediately after bullet seating and again after 24 hours. If none of the loaded rounds exceeds the range of the measured empty case with bullet, the degree of propellant compression is acceptable. Keep in mind that the degree of compression can change with different lots of the same propellant.

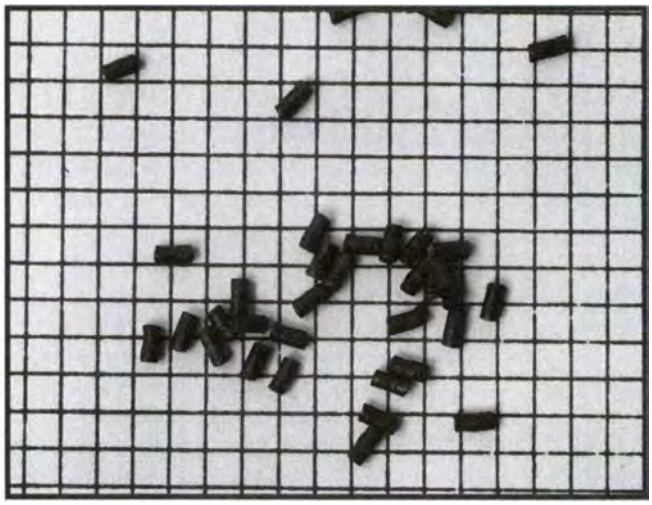

*Shown above is a single base extruded powder with a tubular and perforated shape.*

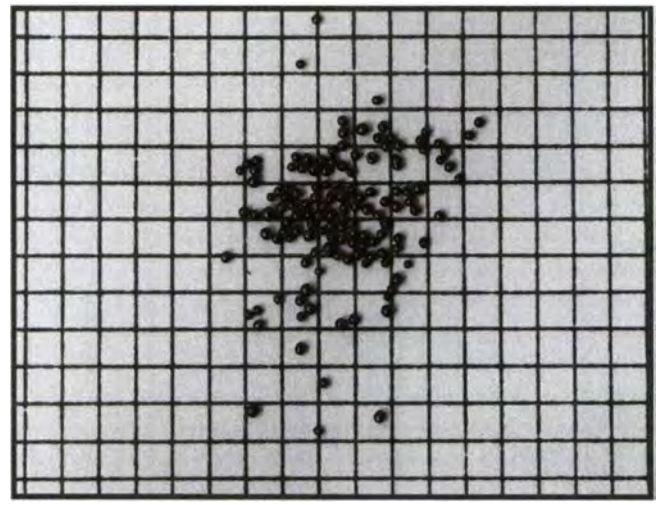

*Shown above is a typical double base, spherical powder. As with most ball types it has been rolled to a somewhat flattened configuration in order to obtain the desired burning rate.*

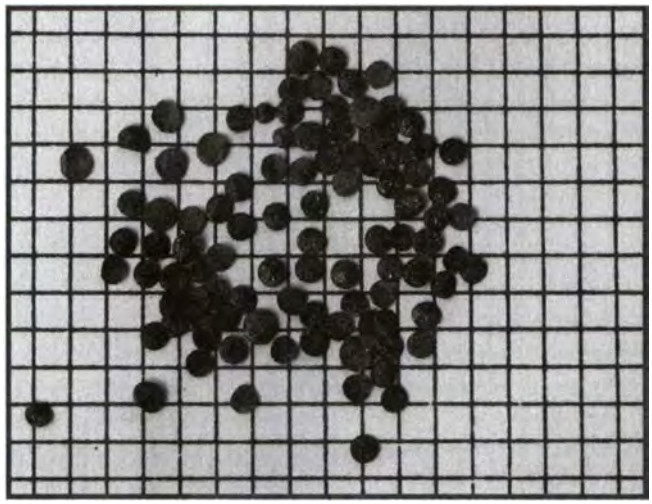

*Shown above is a double base wafer (flake) shaped propellant.*

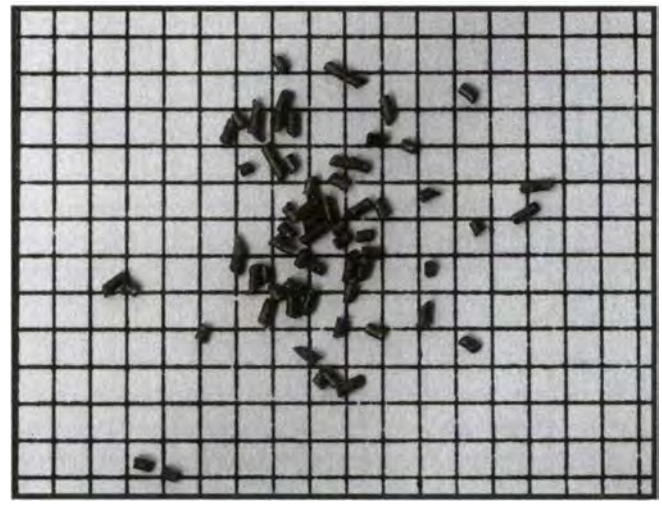

*Shown above is a typical double base, extruded and perforated propellant. This one has rather short grain lengths.*

Note: Do not crimp the bullet when using this method to judge compression acceptability. Also, keep in mind that a neck sized case will produce less powder compression than a full length sized case.

**CAUTION:** Excessive powder compression can lead to potential problems with proper propellant ignition. Sometimes this can cause dangerous conditions. Never use excessively compressed powder charges.

### Powder Characteristics

Propellants are made in various configurations. Those most often encountered included: tubular granulations with or with out longitudinal perforations, wafer-like flakes, and spherical shapes.

Rifle and handgun reloading propellants are made of either nitrocellulose (called single base powder) or a combination of nitrocellulose and nitroglycerine (called double base powder). Each powder is designed to burn at a predetermined pressure level(s) in the confines of a specific cartridge case(s).

**CAUTION:** Powder ignition is normally caused by the heat generated by an exploding primer. However, ignition can be caused under any circumstance which causes the granulations to be heated beyond kindling temperature. Such causes can include sparks of any type or source, heat generated by any source, flame from any source, energy transfer (this includes bullet impact), and other causes. Heat transfer to the powder need not be direct. For example heat applied to the outside of the propellant container can result in ignition of the powder contained therein.

When powder burns it forms enormous quantities of

gas at an extremely high temperature. Confined, this gas will cause very high pressure. In the confines of a cartridge case, a comparatively small amount of propellant can easily cause pressure as high as 65,000 pounds per square inch. The exact amount of pressure generated is a direct result of the amount and type propellant burned and the degree of confinement.

**CAUTION:** If sufficient quantities of propellant burn within a confined area, such as a room, without the possibility of venting the resulting gas, pressure in that area will rise. This pressure can push out windows, doors and weak structural members. Anyone in the area could be seriously burned or suffer injury due to the force of expanding gases.

The rate of pressure generation is such that, given the means of adequate venting, burning powder possesses no undue propensity to create damage beyond that which would be caused by the high temperature of the expanding gases.

Because ignited powder can raise pressure within the storage area, there are specific requirements for powder storage. The first of these is never to transfer any propellant from its original container. The original container is designed to burst or partially open at a very low pressure. Naturally, keeping powder in the original container is also essential for proper identification of the propellant. Second, storage of propellant canisters should be in a unit that will protect the contents from outside heat sources.

**CAUTION:** In case of unintended ignition it is imperative that the storage container have one or more weak walls that will open out at very low pressure to vent gases before they can cause damage. Using a strong enclosure may cause a burst of considerable force causing property damage or personal injury.

Do not store propellants in the same area with solvents, flammable gases, primers, or any highly combustible material. Smoking should never be allowed in the storage area or while handling and using powder. Place conspicuous NO SMOKING signs in the storage area and at the loading bench. And remember to obey all legal requirements for storage as applicable to your community.

Many municipalities use the National Fire Protection Agency's publication NFPA 495 as law. It, in part, states that smokeless powders intended for individual use shall not exceed 20 pounds unless stored in a wooden cabinet or box with walls of at least 1" nominal thickness. So stored, the quantity shall never exceed a total of 50 pounds.

Every reloader should have, read, and adhere to the information contained in the SAAMI pamphlet entitled "Properties And Storage Of Smokeless Propellants. "This pamphlet is available from the various powder manufacturers.

Always store powder in a cool dry place away from any potential source of ignition. Do not store powder where it will be subjected to the sun's rays or be acted upon by any other source of heat. Be certain that unauthorized persons cannot gain access to the storage cabinet. Use only a brush and pan to pick up spilled powder. Dispose of spilled powder in a safe manner.

### Burning Rates

The pressure generated by a specific propellant will vary with the amount of powder, the weight and type of bullet, the shape of the case, and other factors. A specific powder may burn with greater or lesser quickness (force) depending upon the specific cartridge and bullet being used. We have listed the powders in our data section in order of the apparent burning rate achieved with the specific components used. We have also included a relative burn rate chart in the reference section. The reloader, however, never should assume any specific characteristics for a given propellant based on burn rate charts. Stick to the loading data contained in this manual, neither exceeding the maximum charge nor going below the minimum charge. And never substitute one propellant for another, not even when the names are similar.

### Use The Right Powder

Always read the label aloud before and after each loading session and then compare the nomenclature with your data records or this manual. Other safeguards will prove helpful. For example, some reloaders purchase their favorite powders in different size and shape cans; rifle powder is purchased in a 8 pound container, handgun powder in a 1 pound container, and so on.

**CAUTION:** The handloader must make absolute identification of a propellant before using it. There are many powders with similar and even identical nomenclature. Pay specific attention to manufacturer identification. For example: Accurate Arms 4350 is different from Hodgdon H-4350 and both of these are different from IMR 4350. NEVER use data developed for a spe-

cific brand powder with another brand powder with a similar identification. Each powder is different and requires specific data.

Following are brief comments on each of the more than eighty powders used in our data tables. In order to maximize space usage we have used identifying abbreviations as follows:

(S) = Single base
(D) = Double base
(B) = Spherical or ball shaped
(T) = Extruded with tubular shape
(W) = Extruded with wafer or flake shape

## IMR POWDERS

IMR propellants are distributed by IMR Powder Co. of Plattsburgh, New York 12901. Any questions regarding IMR propellants should be directed to this address.

### "Hi-Skor" 700-X

Developed for shotshells, it also is used in many handgun cartridge applications, especially for target loads. (D, W)

### "Hi-Skor" 800-X

This propellant has applications similar to "Hi-Skor" 700-X. Its burning rate is conducive to obtaining high velocities in certain handgun cartridge applications. (D, W)

### PB

PB gets its name from the initials of its basic grain structure type - porous base. The porosity of the powder is the method used to control the burning rate. It is for used for some handgun loads. (S, W)

### SR 7625

We used this powder for handgun and lead bullet rifle loads. The fastest burning propellant in the SR series, the nomenclature of this and other IMR propellants using the same letters stands for Sporting Rifle - a confusing name for powders seldom so used. (S, W)

### SR 4756

Designed originally as a shotshell powder, we used it for many handgun loads and some lead bullet rifle loads. (S, W)

### SR 4759

This powder has limited use in small case rifle cartridges and heavy handgun cartridge loads. It is popular with cast bullet shooters and is often used with reduced loads. SR 4759 is the slowest burning of the canister SR series of powders. (S, T)

### IMR 4227

The fastest burning of the IMR series, it is ideal for the 22 Hornet and other small case rifle cartridges. It is also used in many heavy handgun loads and cast bullet rifle loads. The IMR stands for Improved Military Rifle - a somewhat misleading title. (S, T)

### IMR 4198

A fast burning favorite of shooters using the 17 and 222 Remingtons. It is a good selection for the 444 Marlin and has many other applications including cast bullet rifle loads. (S, T)

### IMR 3031

A popular powder in many small to medium size rifle cases and a perennial favorite for the 30-30 Winchester. Once used to load 250-3000 factory ammo. It is extremely versatile and at its best in medium capacity cases. (S, T)

### IMR 4895

This is a popular wide application propellant with a fine granulation. It meters well through a powder measure. Many target shooters favor it for the 308 Winchester with 168-grain bullets. (S, T)

### IMR 4320

A popular, medium burning propellant, used in a wide range of rifle cartridges. Factory 308 ammo has been loaded with IMR 4320. (S, T)

### IMR 4064

A versatile and accurate powder with a very wide range of applications. Favored in the 308 Winchester, the 30-06 Springfield with 150-grain or lighter bullets, and in the 375 H&H. Its applications range from the

22-250 Remington to the 416 Remington, doing quite well at both extremes. (S, T)

### IMR 4350

A slow burning propellant used in cartridges from 22 to 45 caliber. It is a great choice for such popular applications as the 243 Winchester, 257 Roberts, 7x57mm Mauser, the 30-06 (with bullets of 180-grains or heavier), and 300 H&H Magnum. (S, T)

### IMR 4831

This speed is ideal for many magnum style cartridges including the 338 Winchester Magnum and very large cases such as the 416 Rigby. It also is favored in the 270 Winchester and 280 Remington. Accuracy, in its best applications, is usually outstanding. It works in a wide range of cartridges having a relatively large powder capacity. (S, T)

### IMR 7828

This is the slowest burning IMR powder. It is ideal for large capacity cases with heavy bullets such as the 378, 416, and 460 Weatherby Magnum cartridges. (S, T)

## ALLIANT POWDERS

Questions regarding Alliant propellants should be addressed to Alliant Powder, P.O. Box 6, Radford, Virginia 24141 - 0096

### Bullseye

This is a fast burning, popular handgun powder. It is accurate over a wide application range, often delivering near maximum, and extremely uniform, ballistics. Its reputation for performance is well deserved. Ideal from 25 ACP to the 45 ACP. Its perhaps most often used for target loadings for the 38 Special. (D, W)

### Red Dot

We used Red Dot for many handgun and cast bullet rifle loads. Its name comes from the color coded granulations mixed into it. (D, W)

### Green Dot

Slower burning than Red Dot this powder incorporates a small amount of green colored granulations, hence its name. Applications similar to Red Dot. (D, W)

### Unique

A versatile propellant for a wide range of handgun ammo and for cast bullets in many rifle cartridges. It is the traditional choice for the 45 Colt cartridge and a good choice for handgunner's wanting slightly higher velocities in a wide range of calibers. It works from the 25 ACP to the 44 Remington Magnum. (D, W)

### Power Pistol

Designed as a prime choice for semi-auto handgun cartridges, Power Pistol is popular for applications in 9mm Luger, 40 S&W and 10mm. (D, W)

### Herco

This is a heavy load handgun powder, with course granulations. It is used mostly for high velocity or magnum type loadings. (D, W)

### Blue Dot

A slow burning magnum handgun propellant, Blue Dot sees limited applications. This propellant contains some blue colored identification granulations. (D, W)

### 2400

A fine granulation propellant, 2400 is suitable for limited small cased rifle cartridges such as the 22 Hornet. It is also used for 357, 41 and 44 magnums as well as a cast rifle bullet propellant. (D, T)

### Reloder 7

The fastest of the Reloder series, suitable for a wide range of cartridges from the 222 Remington to the 458 Winchester Magnum. It is perhaps the best choice for the latter with 500-grain bullets as it takes up a minimum of case space. It has a mix of red, yellow and blue identifying granulations. Abbreviated as Rx7 in our data. (D,T)

### Reloder 15

A moderate burning speed, Reloder 15 fits a very wide range of applications from the 223 Remington to the 416 Remington Mag. It is ideal for the 375 H&H. Accuracy is usually superb. Abbreviated as Rx15 in our data. (D, T)

### Reloder 19

This is a slow burning speed that has wide applications from the 22-250 Remington to the 340 Weatherby Magnum. A good choice for the 30-06 and many similar rounds. Abbreviated as Rx 19 in our data. (D, T)

### Reloder 22

A magnum rifle propellant, Reloder 22 is loaded in many factory Weatherby Magnum cartridges. With applications from the 220 Swift to the 416 Weatherby Magnum, it is surprisingly versatile. Abbreviated as Rx 22 in our data. (D, T)

### Reloder 25

This is currently the slowest burning Alliant selection. As such it is a good choice for the various Weatherby Magnum and other very large case cartridges. Abbreviated as Rx 25 in our data. (D, T)

## HODGDON POWDERS

Hodgdon powders are available both as newly manufactured types and as surplus types. Look for identifying statements on the powder can. For questions about Hodgdon propellants write to Hodgdon Powder Co., P.O. Box 2932, Shawnee Mission, Kansas 66201.

### Clays

Designed as a porous base shotshell powder, Clays has target load applications over a wide range of handgun cartridge applications. (D, W)

### Universal

A very broad spectrum of handgun cartridges can be loaded with Universal, from the 25 ACP to the 44 Mag. Also used for shotshell loads. (D, W)

### Titegroup

Designed for handgun rounds, Titegroup is not sensitive to powder position in the case. Hence, it is ideal for handgun loads which occupy only a small space in the case, i.e. 45 Colt. (D, B)

### HP38

This powder duplicates the performance of Winchester 231 and derives its nomenclature from Handgun Propellant ideal for the 38. It can be used in almost all handgun cartridges. (D, B)

### HS6

This powder derives its nomenclature from Hodgdon Shotshell type number 6. It has handgun and cast bullet applications. (D, B)

### H4227

The fastest of the Hodgdon Extreme Extruded series and works in applications similar to IMR4227, for example the 22 Hornet and magnum handgun loads. (S, T)

### H110

A handgun powder that generally requires a heavy bullet and a heavy crimp to insure uniform results. Applications are similar to Winchester 296. (D, B)

### H322

This powder is a universal favorite in the two most accurate cartridges ever designed - the 22PPC and the 6mm PPC. It has won more benchrest matches than any other propellant. Its short grains meter uniformly through a powder measure. (S, T)

### Benchmark

A newer propellant, Benchmark is designed to produce good accuracy in a wide number of rifle cartridges. (S, T)

### H335

A popular speed, H335 it enjoys an enviable reputation in cartridges like the PPC's, 222, and the 223 Remington. It has been sold as both a newly manufactured and a surplus military type. (D, B)

### H4895

This speed has applications similar to IMR4895 and as such is very versatile; but it does require different data. (S, T)

### Varget

An accurate choice for many cartridges, Varget has applications similar to IMR4064 and Reloder 15. (S, T)

### BL-C (2)

This speed is spoken as Ball C 2 and has been available both as a newly manufactured type or as a surplus type. It is popular in diverse applications. (D, B)

### H380

Named for the fact that Bruce Hodgdon found 38.0 grains to be extremely well suited to the 22-250. Because it is the only spherical type that has a true ball configuration, it meters more uniformly than any other

propellant. A great favorite in the 7mm-08 and 308 cartridges, it has wide applications. (D, B)

### H414

This powder is kin to Winchester 760 and as such has wide applications in diversified cartridges. It is popular in the 30-06 and similar sized rounds. (D, B)

### H4831

A propellant that works superbly in many large capacity cases, H4831 is one of the best choices for the 270. It is also favored for use in most of the belted magnum calibers. Data for this propellant should not be confused with IMR 4831 data. (S, T)

### H4831SC

The SC stands for "short cut" and refers to the shorter length of its granulations. The short length of its grains helps H4831SC to meter well from a powder measure. It is ballistically an exact copy of H4831. (S, T)

### H1000

This propellant was named for the 1000 yard target shooters who were likely to find its ballistics attractive. It is intended for very large capacity cases with heavy bullets and is extremely slow burning. (S, T)

### Retumbo

This is a very slow burning powder designed for large capacity magnum cartridges. It often produces higher velocities than other powders of this type. (S, T)

### H870

This is a very slow burning speed with limited practical applications. It is used only in very large capacity cases with heavy weight bullets. (D, B)

### H50BMG

Designed and named for its primary use in the 50 Browning Machine Gun round, it has limited applications because of its extremely slow burning rate. (S, T)

## WINCHESTER BALL POWDERS

Winchester powders are manufactured by Olin in St. Marks, Florida. Questions regarding Winchester powders should be directed to Customer Service, Winchester, East Alton, Illinois 62024.

### 231

This is a fast burning powder with near universal application in handgun cartridges. It is highly favored because of its well known accuracy potential. (D, B)

### WST

Winchester Super Target replaces the long discontinued 452AA. It is used by many handgun target shooters. (D, B)

### WSF

Winchester Super Field has numerous applications in handgun cartridges, especially competition loads. (D, B)

### 296

A magnum handgun powder, 296 requires heavy bullets and heavy crimps in order to realize uniform ballistics. (D, B)

### 748

A relatively fast rifle powder that is used in a wide range of case sizes, 748 is popular with many benchrest and target shooters. As with all spherical powders, it meters quite uniformly through a powder measure. (D, B)

### 760

A slower speed, 760 is suitable for a very wide range of applications. It is accurate in many cartridges including the 270 Winchester, 280 Remington and 30-06 Springfield. (D, B)

### WXR

The only Winchester extruded Rifle powder, it is slow burning and has been used in factory 7mm Mag loads. It has applications over a wide range of cartridges and is similar to both 4831 powders. (S. T)

## ACCURATE ARMS POWDERS

For questions concerning Accurate Powder contact Box 167, McEwen, Tennessee 37101.

### No.2

This is a fast burning powder with a wide range of handgun cartridge applications including the popular 9mm Luger and 38 Special cartridges. (D, B)

### No.5

Another fast burning handgun propellant, No.5 is used in a wide range of calibers including 9mm Luger, 357 Magnum, 40 S&W, 44 Remington Magnum, and 45 ACP. (D, B)

### No.7

Designed for NATO 9mm carbine ammo, our use of No.7 includes 9mm Luger, 357 Magnum, 38 Super Auto., 10mm Auto., and 44 Remington Magnum calibers. (D, B)

### No.9

This is a relatively slow burning handgun powder. In general, it should be used with heavy bullets and a very firm crimp. It has applications similar to Alliant 2400. (D, B)

### XMP 5744

This is a rather unique powder that was designed for reduced loads. It is a bulky powder that is one of the best choices for use with cast bullet rifle loads. We have extensive data using it in this manner. (D, T)

### 1680

This powder was designed specifically for the 7.62x39 Russian. It is very fast burning and has limited applications. (D, B)

### XMR 2015

This small grained powder is intended for small case cartridges and does well in the 22 and 6mm PPC cartridges. (S, T)

### 2230

Developed with the 5.56 NATO (223 Remington) in mind, 2230 is a comparatively fast burning rifle powder suitable for many medium capacity cases. (D, B)

### 2460

Slightly slower burning than 2230, this speed is useful from the 223 to the 30-06. It is popular for 30 caliber service rifle matches. (D, B)

### 2520

Designed for medium capacity rifle cartridge cases, our applications begin with the 22-250 Remington and cover a broad range of cartridges. (D, B)

### 2700

A relatively slow burning speed, the primary application for 2700 is with heavy bullets. (D, B)

### 4350

This speed was designed to compete with IMR 4350 and H4350; but data is not interchangeable. (S, T)

### 3100

This is another relatively slow speed propellant designed to compete with IMR 4831 and Hodgdon H4831. Thus, it is suitable as a magnum cartridge propellant. (S, T)

### MAGPRO

This powder was designed especially for the new short magnum rifle cartridges. It will produce optimum velocities at nearly full case capacities. (D, B)

### 8700

A very slow burning propellant, 8700 is at its best in very large capacity cases. (D, B)

## VIHTA VUORI POWDERS

Questions on Vihta Vuori powders should be directed to Kaltron - Pettibone, Vihta Vouri Powders, 1241 Ellis Street, Bensenville, Illinois 60106.

### N320

We used this fast burning powder with light bullets in the 45 Colt. It also did well with cast and jacketed loads in the 45 ACP. (S, T)

### N340

With a burn rate not unlike Herco, we used this speed in 9mm Luger, 40 S&W, and in the 45 Colt with heavy bullets. (S, T)

### N105

This is a limited application speed which we used in the 357 Sig. (S, T)

### N110

Fastest burning of the N100 series, N110 competes with both Winchester 296 and Alliant 2400. Thus, it is useful in such calibers as the 22 Hornet, 357 Magnum, and 44 Magnum. (D, T)

### N120

This propellant has limited applications somewhat similar to IMR 4227. (S, T)

### N130

We used this speed in the 7.62 x 39 and with some cast bullet loads. (S, T)

### N133

This powder was used in cast bullet loads and applications somewhat similar to IMR4198. (S, T)

### N135

Competing with IMR 4895, this speed has a wide range of applications in non-magnum cartridges. (S, T)

### N140

With burning characteristics similar to Varget and Reloder 15, N140 is useful in a wide range of calibers. It is becoming popular in the 223 Rem with bullets of 69 grains and heavier. (S, T)

### N150

If N140 and N160 are good in an application, N150 might prove great. (S, T)

### N160

Similar in applications to IMR4350, N160 is useful in a wide range of calibers from the 243 and upward. (S, T)

### N165

With a relatively slow burning rate, N165 is useful in large magnum cases and in some standard cartridges with very heavy bullets. (S, T)

### N170

Extremely slow burning, this speed is limited in applications. (S, T)

### N540

This speed is popular with target shooters, especially in the 223 and 260 Remingtons with heavy bullets. (D, T)

### N550

Not too different from N150 in burning speed, N550 is useful in such cartridges as the 308 Win. and 30-06. (D, T)

### N560

Applications for N560 include the 6,5 X 55mm Swede and the 270 Winchester. It fits some uses similar to N160. (D, T)

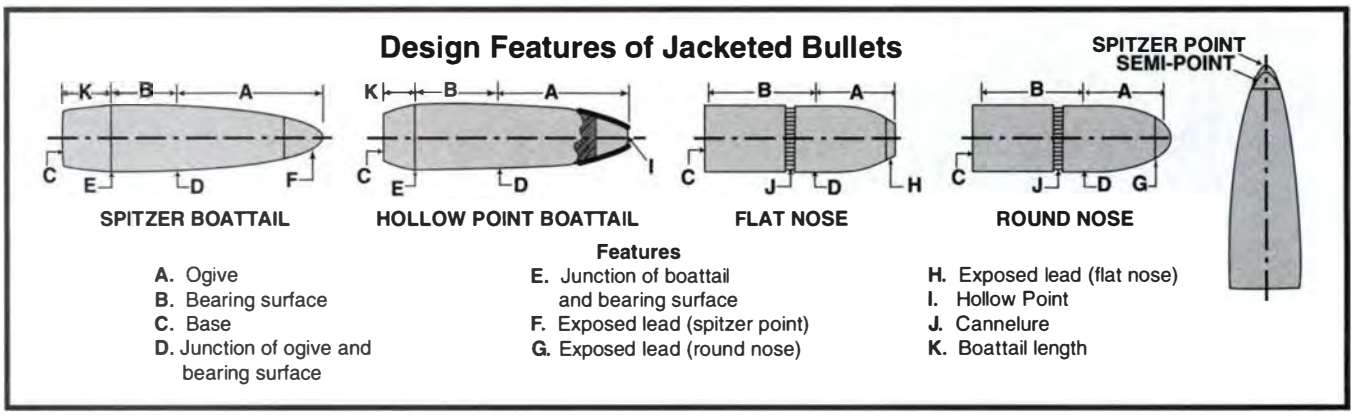


Not all jacketed bullets are created equal. Those designed specifically for target or benchrest shooting are generally capable of more accuracy than the average rifle will deliver. Nonetheless, rifle bullets of this type, should never be used for game as they may completely fail to expand or, at the other extreme, disintegrate on surface impact.

Bullets designed for target applications often carry a trade name, or generic nomenclature, suggesting this type application, i.e. "MatchKing". Some target bullets are extremely frangible being made with thin jackets using a method of assembly known as soft swaged. Such bullets also can be suitable for varmint hunting if the game is relatively small in mass. However, some target bullets are in reality non-expanding types. Target bullets may have lead exposed at the tip, or a hollow point. Neither type of construction should be interpreted to suggest the bullet is an expanding type, albeit some hunting bullets are similarly designed.

In order to insure a high degree of accuracy, target bullets are made to exacting tolerances for weight, dimensions, and concentricity. When testing bullets during production runs, it is not uncommon for some manufacturers to get groups of ten shots measuring well below half an inch. All of the effort involved in the manufacture of a good target bullet results in a slight premium in selling price.

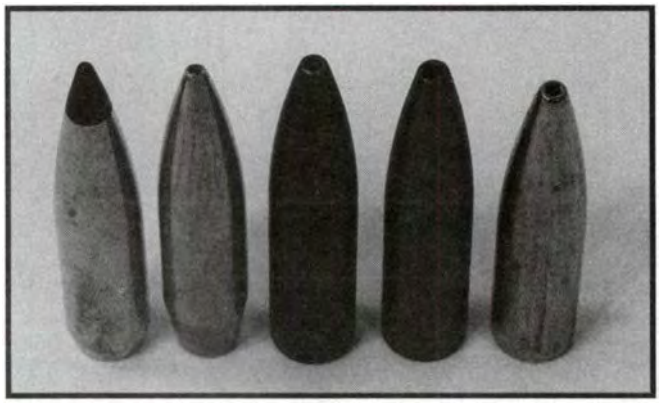

*Bullets are designed for specific applications and visual inspection cannot possibly show the bullet's purpose.*

## Varmint Bullets

It is not easy to hit a woodchuck at 300 yards. It is even more difficult to hit a prairie dog at the same range. Obviously, varmint bullets must be extremely accurate. Additionally, rapid expansion, or even disintegration of the bullet, must occur when it strikes the limited mass of a small animal. If the bullet does not expand in this manner, it will simply pass through small quarry creating a puncture wound that will not be immediately fatal.

Frangible varmint bullets are also a safety asset. Fired at the low angles often associated with varmint hunting, strongly constructed bullets have a propensity to ricochet after striking the ground. Frangible varmint bullets will tend to break up on impact with the ground, and thus reduce potential ricochet danger.

Because of the need for a high degree of accuracy combined with a frangible construction, some target bullets are ideally suited to varmint shooting. Equally, some varmint bullets make excellent target bullets, for example the Nosler Ballistic Tip.

## Big Game Bullets

A lot of consideration needs to be given to your specific needs when selecting a big game bullet. Not all big game bullets are up to the task of anchoring thick skinned or heavy boned animals. Nor, for that matter, are some up to sufficient penetration to solidly anchor even light game if any but a broad side shot is taken.

Many bullets offered for big game are quite inexpensive. Others, at first, appear very expensive. Perhaps nowhere else is the old expression, "you get what you pay for," more true than when purchasing game bullets. The run-of-the-mill, inexpensive bullets have killed a

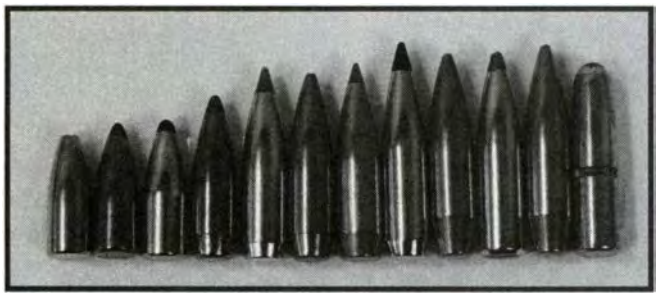

*Understanding bullet design and weight applications are essential for appropriate selection. Shown from left to right are 30 caliber bullets with typical applications; a. 110 grain (varmint); b. 125 grain (varmint and light target); c. 130 grain (varmint); d. 150 grain (light big game such as deer); e. 165 grain (light big game); f. 168 grain (target); g. 178 grain (target) h. 180 grain (all around big game); i. 190 grain (target); J. 200 grain (heavy big game); k. 200 grain (target); l. 220 grain very heavy big game.*

lot of game. This is especially true when the animals hunted are relatively easy to kill, i.e. antelope and deer. But, even here, many hunters have suffered lost game when the shot was at a difficult angle. Other times, hunters do not understand why game escaped after a well placed shot. Even a rare bullet failure can bring great disappointment. When the game gets tougher and heavier, the number of failures incurred with bargain priced bullets becomes notable.

Bullet expansion involves having the jacket progressively peel back allowing the lead alloy core to mushroom. During expansion of inexpensive bullets, a major portion of the jacket and core may break away from the bullet's mass. This loss of weight can be so great that the bullet's momentum will be reduced to nil and penetration will cease long before the vital organs are reached. Occasionally, an inexpensive bullet may completely fail to expand and simply punch a tiny hole through the quarry without causing a serious wound channel. Such scenarios can result in lost game.

Big game can place heavy demands upon bullet design. The requirement for outstanding accuracy is a difficult design criterion when it has to be combined with the essential need for controlled and progressive expansion. For appropriate expansion the bullet must first penetrate hide, next the bullet must begin to mushroom. The rate of expansion must be controlled so that the bullet will penetrate deeply. Ideally a bullet should expand to double its original diameter. While so doing, the bullet must reach and travel through vital organs before stopping its forward progress due to loss of momentum. To accomplish this a bullet must retain most of its mass. Passage through bone and muscle, no matter how heavy, must not create undue loss of mass and momentum.

An accurate bullet with a combination of good expansion and high weight retention is costly to manufacture. Thus, the best big game bullets carry a premium price. Happily, comparatively few bullets are required to sight-in and even fewer are actually fired when hunting. Thus, the total cost of premium bullets will go almost unnoticed. Naturally, practice shooting can be conducted with popular priced bullets; with the shooter switching to premium bullets when sighting-in immediately before hunting season.

The hunting of relatively lightweight thin-skinned game does not require as much mass retention as when hunting thick-skinned and/or very heavy game. In large and heavy game, a bullet may have to penetrate up to three times the distance before the vitals are reached. Thus, for tough game, a heavily constructed bullet is needed.

Premium hunting bullets can be placed into approximate weight retention groups. For example: Nosler Partition bullets generally retain 60% of mass. Winchester-Nosler Combined Technology Partition Gold bullets usually retain 80% of mass. Swift A-Frame bullets often retain 95% of mass. As you might expect, the price of each reflects its weight retention capability.

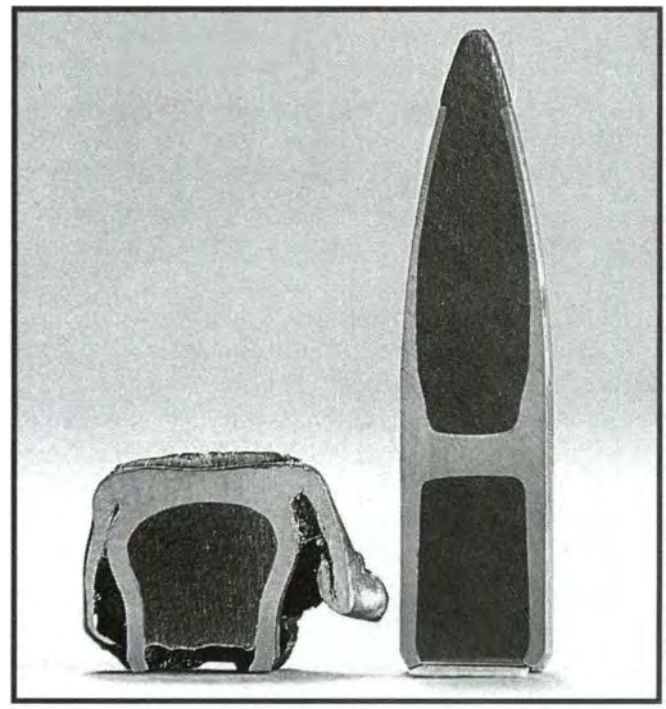

*The Nosler partition bullet is shown with sectioned specimen and expanded one. The expanded bullet shows typical performance, front core gone, wings folded back close to shank, and about 65% of original weight intact.*

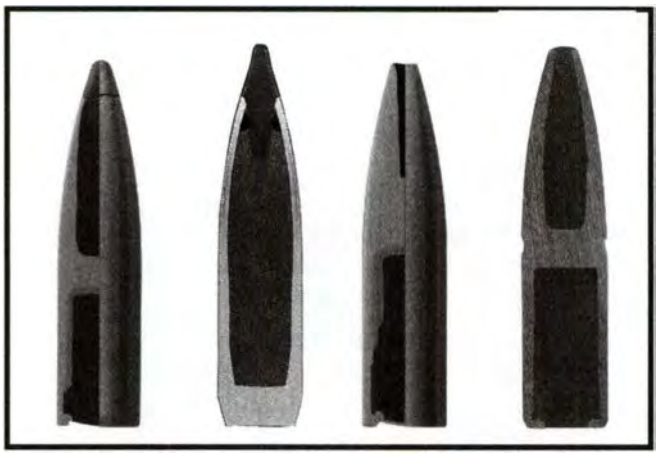

*Sectioned views of some excellent premium grade bullets available to the reloader. They are left to right: Combined Technology Partition Gold, Nosler Ballistic Tip, Combined Technology Fail Safe, and Swift A-Frame.*

If you are a deer hunter who takes only broadside, behind the shoulder shots you can get along with far less bullet than if you fire at a deer leaving the scene and offering only a difficult angle shot requiring perhaps three times as much penetration. As the game gets bigger, or the ranges longer, your need for the very best bullets increases. In all cases, you should always achieve a large exit hole on broadside shots. On difficult deep penetration shots, if an exit hole does not occur you should trace the wound channel and determine remaining bullet weight. If things are not as hoped, a better bullet is required. Assuming you are using an adequate cartridge, if you lose even a single animal when you absolutely know the bullet was properly placed, your choice of projectiles should be seriously questioned. Hunters with extensive experience come to realize that the bullet selected can be more important than the cartridge choice. Whatever hunting bullet you select, be sure it is up to your requirements.

### Dangerous Game Solids

For the hunting of elephant, cape buffalo, or even hippo, smart hunters wisely choose a "solid" bullet to insure deep penetration through extremely thick hide, heavy fat, tough muscle and the huge bones. However, there are many "solids" which may fail to accomplish the necessary penetration.

Typically the least expensive solids are actually a "full" metal cased bullet having a lead core, a steel inner jacket and a copper outer jacket. Such bullets are closed on the nose end with the lead core exposed at the base. As many serious hunters have found, when used on truly heavy game, some bullets of this style construction sometimes bend, rivet at the nose, or even rupture. When any of these failures occurs, penetration will not be in a straight line, or of sufficient depth.

Bullets using steel jackets can result in short barrel life. We have seen several 458 Win. Mag. barrels, used exclusively with steel jacketed bullets, wear out to the point of being unable to stabilize a bullet after as few as 200 rounds were fired.

Another approach to solid bullet design is the use of a homogeneous alloy - no separate jacket and core. Bullets of this type are often made of a solid piece of bronze. These have a good reputation albeit we have experienced several failures with this type. Another type solid uses a heavy bronze jacket and a super hard tungsten core.

Still another type of solid is made with a heavy bronze front end with a hard alloyed lead rear section. The Federal Trophy Bonded Sledgehammer solid is an example of this type. These have a fine reputation for getting the job done with few failures. Such bullets may cost several dollars each, but this is a small price to add to the total cost of a safari.

### Appropriate Bullet Application

Each reloader needs to consider the bullet performance required for their application and then to make a wise selection. As stated, deer and antelope hunters who take only broadside, behind the shoulder shots will place the least amount of demands on a hunting bullet. The hunter who wishes to take difficult angle shots, requiring considerable penetration, will need a better bullet. As game gets larger or more dangerous, premium bullets become essential.

Premium grade bullets are produced by several major bullet suppliers. Such bullets include the Speer Grand Slam, the Nosler Partition, the Combined Technology Partition Gold, Combined Technology Fail Safe, the Swift A-Frame and Scirocco.

### Velocity Versus Bullet Selection

The reloader needs to consider impact velocity when selecting bullets and appropriate calibers. Bullets driven at greatly differing velocities do require differing construction. For a 22 caliber bullet to expand properly at 22 Hornet speeds, a very thin jacket with a good amount of exposed lead is generally required. Cartridges of approximately the velocity of a 222 Remington require the use of a slightly stronger bullet. To withstand the very high velocities of a 22-250 or 220 Swift, a 22 caliber bullet must be quite strong. The

use of a 22 Hornet or 222 Remington style bullet in one of the latter could result in the bullet disintegrating in flight, turning into a puff of blue smoke due to the high rotational forces.

Larger diameter bullets require equal consideration with respect to impact velocity. For example: the very low velocity of the 30 Carbine cartridge demands very "weak" bullet construction if there is to be any bullet expansion. A 30-30 demands somewhat tougher bullets but not as tough as a 30-06 bullet. And if you are using a 300 Weatherby Magnum only the toughest bullets will penetrate properly. Lesser bullets are prone to disintegrate at the high impact velocity of super fast cartridges. As a general rule, if you are using magnum velocities, premium bullets should be considered essential.

Keep in mind that as ranges increase, terminal bullet velocity decreases. Eventually, bullet velocity will reduce to the point where proper bullet expansion is impossible. A good rule of thumb is to expect this velocity to be approximately 2,000 fps. when premium bullets are used.

### Appropriate Bullet Weight

Specific bullet application will generally dictate a weight, or perhaps a range of applicable weights. For example: among 30 caliber bullets those of 110 to 130-grains are most often thin jacketed types designed for varmint hunting. In this same diameter, bullets of 150 to 165-grains are usually intended for application on light big game - i.e. antelope, deer, small black bear, goat and sheep. The heavier bullets, from 180 to 220-grains, are generally intended for medium to heavy game such as elk or moose, albeit many hunters correctly choose the 180 grain as a single weight selection for application on all big game.

In calibers from 24 to 30, the lightest bullets are usually varmint types and the heavier bullets are for progressively heavier big game animals. Bullets of 32 caliber, and larger, seldom are made in frangible varmint types. Usually, all 32 caliber and larger diameter bullets are designed for big game. The lightest of these are intended for the smaller big game animals and the progressively heavier bullets for the larger animals. Remember, using a too light bullet will result in insufficient penetration. If in doubt, use a heavier bullet weight.

### Bullet Nose Configuration

Sometimes it is essential to use flat or blunt nose bullets in specific rifles. For example, cartridges to be used in a tubular magazine should always have flat or very blunt nose configuration. The use of a spitzer in a tubular magazine allows the point of one bullet to rest against the primer of the round immediately in front of it. Under the forces of recoil, a pointed bullet could ignite the primer against which it rests.

**CAUTION:** Never use spitzer bullets in a tubular magazine.

Some firearms are designed to feed properly only with round nose bullets. Many 458 Win. Mag. bolt action rifles are perfect examples of this need for round nose bullets. Many military handguns were also designed with only round nose bullets in mind.

However, the selection of round nose bullets sometimes occurs because of misinformation. Many handloaders (and factory ammo users too) still place credibility on the old wife's tale which states that only slow moving, heavy, round nose bullets stand any chance of plowing through heavy brush and reaching the intended quarry. Spitzer bullets, the same tale states, deflect considerably more when encountering intervening brush. The fable further acquaints us with the belief that the greater the bullet velocity, the greater the amount of deflection.

This "theory" has been debunked many times. During the mid 1960's, Lyman employees (the late Lysle Kilbourn and your editor) ran extensive deflection tests. The findings of these tests, and those of many other interested persons that followed, conclusively prove that all bullets deflect regardless of nose profile, mass, or velocity. That no one bullet form deflects more than any other has been firmly established. Those who use round nose or blunt bullets because they believe that these better penetrate through brush are working with a misleading, albeit often repeated, piece of "advice".

Others use blunt nose bullets because "they expand better than spitzers". About a hundred years ago, when smokeless powder and jacketed bullets were first coming into general use, this was indeed fact. But, modern bullet design has created spitzer bullets that expand readily, equaling or outperforming the best round nose styles.

### Spitzers Are Better

At long range, a 300 Savage cartridge loaded with a spitzer bullet will outperform a 30-06 loaded with a round nose bullet. A blunt nosed 30-06 bullet of 180

grains, with a muzzle velocity of 2700 feet per second, will arrive at the 300-yard mark traveling at 1725 feet per second. A 180-grain spitzer bullet fired from a 300 Savage, with a muzzle velocity of 2350 feet per second, will arrive at 300 yards with a remaining velocity of 1750 feet per second, a tad faster than the 30-06 round nose bullet. Thus, after 300 yards, the 300 Savage spitzer overcomes the 350 feet per second advantage of the round nose 30-06 bullet.

Looking at it another way, two 30 caliber 180-grain bullets started at identical velocity will have drastically different down range ballistics dependant upon bullet profile. A very sharp nosed bullet of this type, started at 2700 feet per second, would have a 300 yard remaining velocity of 2075 feet per second versus the round nose remaining speed of 1725 feet per second - a 350 feet per second advantage for the spitzer. At 400 yards the spitzer would have approximately a 450 feet per second superiority. At either range, the difference is enough to create substantial trajectory and terminal ballistics inequality.

Spitzers are ballistically superior because their sharp profile results in less air resistance. The reloader can judge the relative performance of any bullet by referring to its ballistic coefficient. This information can be found in the data head for each bullet for which we show loading recommendations. A round nose 180-grain 30 caliber bullet might have a ballistic coefficient of .248 while a spitzer of identical weight and caliber could have a rating of .438. The larger the number the better a bullet will resist deceleration.

It makes little sense to develop a load that squeezes the last foot per second out of your favorite cartridge and then turn its down range performance into that of a lesser cartridge because a blunt nosed bullet is used. Selecting sharp bullet profiles, when appropriate, pays big ballistic dividends. The individual who never shoots past 100 yards may never notice a difference. However, as ranges increase, bullet performance variations, as a function of nose profile, become quite obvious.

Spitzers are not without a weakness. Their sharp soft lead tips deform easily during recoil forces as bullets impact with the front magazine-wall. This is most pronounced with magnum calibers. However, generally the amount of deformation normally incurred is not of major consequence.

If bullet nose damage is a serious problem due to very heavy recoil, there is an option. A "protected point" bullet will eliminate the problem. Do select a bullet with as small a meplat (the blunt tip area) as possible in order to preserve down range ballistics. Bullets such as Speer's Grand Slam or Nosler's Protected Point Partitions are examples of this type.

Certain spitzers have been designed to preclude any flattened noses. The Nosler Ballistic Tip, and the Combined Technology Ballistic Silver Tip are examples. Both use a tough insert placed into a hollow tip to form a very sharp and recoil proof bullet nose.

### Bullet Base Configuration

The shape of a bullet's base can influence ballistics. Flat base bullets produce more air turbulence and hence have more drag to over come than boattail bullets. This means an increased rate of velocity loss due to a lower ballistic coefficient for the flat base types. However, this difference is generally quite small. The boattail shape is actually most effective in reducing drag when velocity has dropped below the speed of sound, about 1120 feet per second. The average reloader deals with substantially higher velocity and thus may choose flat or boattail bullet bases without concern for appreciable ballistics variation due to bullet base shape.

### Bullet Seating Depth (Overall Cartridge Length)

Generally, the best accuracy occurs when the bullet must "jump" 0.005" to 0.020" from its seated-in-the-case position to the point at which its bearing surface first engages the rifling lands. The best seating depth for any specific load and firearm combination can be determined only by trial and error. Load 10 cartridges at a 0.005" jump and fire for group size. Then, repeat the test with additional groups fired with cartridges seated to 0.010", 0.015" and 0.020" bullet jump. On occasion, some firearms prove best served with a bullet jump of considerably greater than 0.020".

### Handgun Bullets

Jacketed handgun bullets generally are not subjected to the extremes in velocity as rifle bullets. Most hunters will restrict handgun shots to considerably less than 100 yards, therefore a relatively narrow velocity range occurs with respect to impact velocity for a given bullet.

A minimum impact velocity of about 900 feet per second is usually required in order to obtain reliable expansion from jacketed handgun bullets. In that handgun impact velocities seldom exceed 1400 feet per second, and are often considerably slower, even the differ-

*The handgun bullets pictured above show differing construction. The bullet on the left is a Speer 147gr. 9mm TMJ (Total Metal Jacket). It is fully surrounded by the copper jacket which reduces airborne lead while giving excellent feeding in semi-automatics. The others are hollow points designed for expansion. From the left: Speer 357 Sig 125gr. Gold Dot hollow point, Winchester 40 caliber 175gr. Silvertip, Hornady 38 caliber 158gr. HP/XTP, and Speer 45 caliber 200gr. Gold Dot hollow point.*

ences from one caliber to another do not place extreme demands on a bullet.

Generally speaking, jacketed handgun bullets with hollow point nose configurations expand more rapidly than soft point types. There are reasons to favor both types. The soft point's slower expansion will, when taking big game, allow deeper penetration. Hollow points are often used on smaller game and varmints.

Some jacketed handgun bullets with lead exposed at the nose are not intended for expansion and are in fact "nonexpanding" target style bullets. Always follow the bullet manufacturers suggestions and guidelines.

### Get The Opinion Of Experienced Persons

Unless your use is simply plinking at short ranges, bullet selection is never simply a matter of bullet weight and diameter . Requirements for accuracy, expansion, the amount of penetration and mass retention are all part of what needs to be considered. Accuracy can be determined with test shooting at the range. Controlled expansion performance can take years and several dozen big game animals to begin to provide sufficient data for an appropriate understanding. For this reason it is wise to seek out several persons who have extensive experience on a wide variety of game under differing conditions. Question them about their favored bullets. Their suggestions may provide sufficient insight to make a good first choice of a game bullet. In this way you may avoid disappointment with your first hunting loads.

## Cannelures And Crimping

### Roll Crimping

For some applications, it is necessary to crimp the case mouth to the bullet. Included among these applications are all ammo to be used in revolvers, all ammo used in tubular magazines, all ammo for very heavy recoiling loads i.e. ammo in calibers designed for dangerous African game.

The purpose of crimping is to prevent movement of the bullet, either forward or rearward, from the original seating depth. This is most often accomplished by roll crimping, the turning of the case mouth inward into a corresponding circular cut in the bullet circumference (the cannelure). In revolver cartridges, under the forces of recoil, bullets will tend to creep forward, even to the point of preventing cylinder rotation. In tubular magazines recoil forces tend to drive bullets deeper into the case. Ditto for firearms where the bullet forcefully impacts some surface during the feeding cycle, i.e. semi-automatic and pumps. Heavy calibers, such as the various 416s, may suffer bullet movement during recoil. For all these reasons, and others, bullet crimping may be essential to ensure proper firearm functioning and uniform ballistics.

**ROLL CRIMPING**

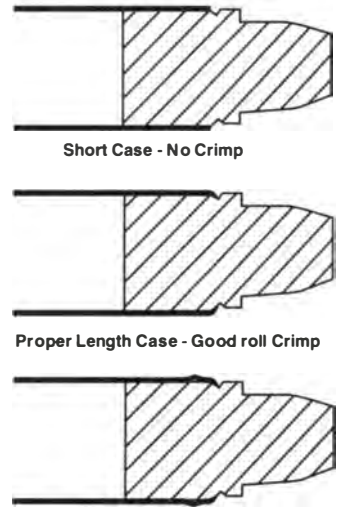


**CAUTION:** Never attempt to roll crimp to a bullet without a cannelure. Doing so will damage the case and bullet and will prove ineffective for the intended purpose.

Roll crimping can have a somewhat detrimental effect on accuracy. Therefore, unless called for by specific conditions, most reloading is done without crimping.

### Taper Crimping

In some instances crimping may be desirable but it also may be impractical or even dangerous to roll crimp. For example, any case which headspaces from the case mouth such as the 30 Carbine, 9mm Luger, and 45 ACP, should never be roll crimped. Doing so shortens the case and alters headspacing. Yet each of these, and other cartridges, are subjected to forceful impacts with feeding surfaces of the firearm. The solution is to taper crimp. This method forces the outside of the case neck tightly against the bullet without shortening the case.

**TAPER CRIMPING**

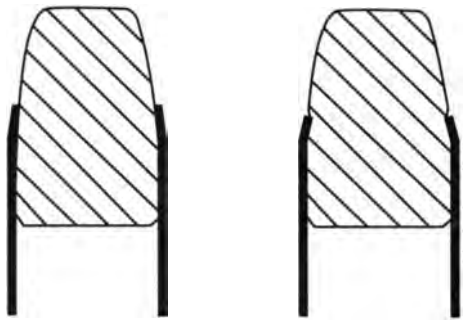

Proper taper crimp — Excessive taper crimp deforms bullet

*Roll crimping is used for ammo applications in revolvers, tubular magazines, and heavy recoiling firearms. Taper crimping is used primarily with cartridges which headspace off the case mouth.*

## NOMINAL JACKETED RIFLE BULLET DIAMETERS

| Diameter in inches | Suitable for these calibers. Please note that some calibers require bullets of specific design with respect to velocity and expansion characteristics. |
|---|---|
| .172" | 17 Remington |
| .224" | 22 Hornet (older rifles may require .223") 218 Bee; 222 Rem.; 222 Rem. Mag.; 22 PPC USA; 22 BR Rem.; 223 Rem.; 219 Zipper; 225 Win.; 224 Wea. Mag.; 22-250; 220 Swift. |
| .243" | 6mm PPC USA; 6 x 45mm; 243 Win.; 6mm Rem.; 244 Rem.; 240 Wea. Mag. |
| .257" | 25-20 Win.; 256 Win.; 250 Sav.; 257 Roberts; 25 -06; 257 Wea. Mag. |
| .264" | 6.5 x50mm Jap.; 6.5mm Carcano; 6.5 x 54mm M.S.; 260 Rem.; 6.5 x 55mm Swede.; 6.5 Rem. Mag.; 264 Win. Mag. |
| .277" | 270 Win.; 270 WSM; 270 Wea. Mag. |
| .284" | 7-30 Waters; 7mm-08; 7mm Mauser (7 x 57mm); 284 Win.; 280 Rem.; 7mm SAUM; 7mm WSM; 7MM Rem. Mag.; 7mm Wea. Mag.; 7mm STW; 7mm Ultra. |
| .308" | 30 M1 Carbine, 30-30 Win.; 307 Win.; 300 Sav.; 30-40 Krag; 7.5 x 55mm Swiss; 308 Win.; 30-06; 300 H&H; 300 WSM; 300 SAUM; 300 Win. Mag.; 300 Norma Mag.; 300 Wea. Mag.; 300 Ultra; 30-378 Wea. Mag. |
| .311"-.312" | 32-20 Win.; 7.62 x 39mm; 7.62 x 54; 7.65 x 53mm Arg.; 303 Brit.; 7.7 x 58mm Jap. |
| .318" | 8 x 57mm J |
| .321" | 32-40 Win.; 32 Win. Spl. |
| .323" | 8mm Mauser (8 x 57 mm JS); 8mm-06; 8mm Rem. Mag. |
| .338" | 338-06; 338 Win. Mag.; 338 Ultra; 340 Wea. Mag.; 338-378 Wea. Mag. |
| .348" | 348 Win. |
| .358" | 35 Rem.; 356 Win.; 358 Win.; 350 Rem. Mag.; 35 Whelen; 358 Norma Mag.; 358 STA. |
| .366" | 9.3 x 62mm; 9.3 x 74Rmm. |
| .375" | 38-55 Win.; 375 Win.; 375 H&H; 375 Wea. Mag.; 375 Ultra; 378 Wea. Mag. |
| .400" | 38-40 Win. |
| .416 | 416 Rem. Mag.; 416 Rigby; 416 Wea. Mag. |
| .424"-.427" | 44-40 Win. |
| .429" | 444 Marlin |
| .458" | 45-70 Govt.; 450 Marlin; 45-90, 45-100, 45-110; 45-120; 458 Win. Mag.; 460 Wea. Mag. |
| .475" | 470 Nitro. |
| .510"-.511" | 50-70; 50 BMG. |

## NOMINAL JACKETED HANDGUN BULLET DIAMETERS

| Diameter in inches | Suitable for these calibers. Please note that some calibers require bullets of specific design with respect to velocity and expansion characteristics. |
|---|---|
| .222" | 22 Rem. Jet. |
| .224" | 221 Fireball. |
| .251" | 25 ACP. |
| .309" | 30 Luger (7.65 Parabellum); 30 Mauser. |
| .311"-.312" | 32 ACP.; 32 S&W; 32 S&W Long; 32 H&R Mag. |
| .355" | 380 ACP.; 9mm Luger (9mm Parabellum); 9 x 21mm; 9 x 25mm; 38 Super; 357 Sig. |
| .357" | 38 S&W, 38 Spl.; 357 Mag.; 357 Maximum. |
| .364" | 9 x 18mm Makarov |
| .400 | 40 S&W.; 10mm Auto. |
| .410 | 41 Action Exp.; 41 S&W Mag. |
| .429" | 44 S&W Spl.; 44 Rem. Mag. |
| .452" | 45 Auto Rim; 45 ACP.; 45 Win. Mag.; 45 Colt, 454 Casull |
| .475" | 480 Ruger |
| .500" | 50 Action Express |

## ADDENDUM: MOLY COATED BULLETS

The use of bullets coated with Molybdenum disulfide or "moly" has become popular with high volume users such as varmint hunters and High Power shooters over the last ten years. Moly is a dry film lubricant that reduces friction between the bullet and the rifle's bore. Advocates of moly coating cite improved accuracy, longer barrel life, lower chamber pressure, and reduced copper fouling. The substitution of moly-coated bullets in place of an uncoated bullet over a pet load does not always yield peak accuracy. This substitution of a moly-coated bullet often requires minor tweaking of a particular load, usually increasing the powder charge by a few tenths of a grain up to a grain depending on the caliber and specific load. Use caution when working up all loads. Many shooters use Kano Kroil® to clean moly fouling. Refer to Chapter 14 for additional tips on cleaning rifle barrels fired with moly-coated bullets.

Although several bullet manufacturers offer pre-coated bullets, many shooters opt to coat their own with Lyman's Super Moly kit. The process for properly coating bullets requires that they be clean and free of any residual oils from manufacturing. Shooters using steel shot as a coating media should thoroughly clean the shot with degreaser before beginning. Lyman's Super Moly kits utilize ceramic media. This ceramic media is much lighter than steel and gives better coverage. Full instructions are enclosed with Lyman's Super Moly kits.

The Lyman technical staff fired several popular match loads with both uncoated and moly-coated bullets through our 308 Winchester electronic piezo pressure barrel. The results verify a reduction in chamber pressure as well as a slight reduction in velocity. These results are based on five-shot strings and utilized Remington cases and 9 1/2 primers. On average, moly coated bullets resulted in a three percent reduction of chamber pressure and a one to two percent reduction in velocity compared to uncoated bullets.

### 168-grain Sierra HPBT
### 41.5-grain of IMR-4895

| | pressure | velocity |
|---|---|---|
| uncoated: | 49,660 psi | 2488 fps |
| moly-coated: | 47,300 psi | 2459 fps |
| | 2,360 psi | 29 fps |

### 175-grain Sierra HPBT
### 42.0 grains of IMR-4064

| | pressure | velocity |
|---|---|---|
| uncoated: | 53,040 psi | 2542 fps |
| moly-coated: | 50,980 psi | 2507 fps |
| | 2,060 psi | 35 fps |

### 190-grain Sierra HPBT
### 41.3-grains of IMR-4895

| | pressure | velocity |
|---|---|---|
| uncoated: | 59,780 psi | 2482 fps |
| moly-coated: | 57,340 psi | 2448 fps |
| | 2,440 psi | 34 fps |

# 9 Cast Bullets

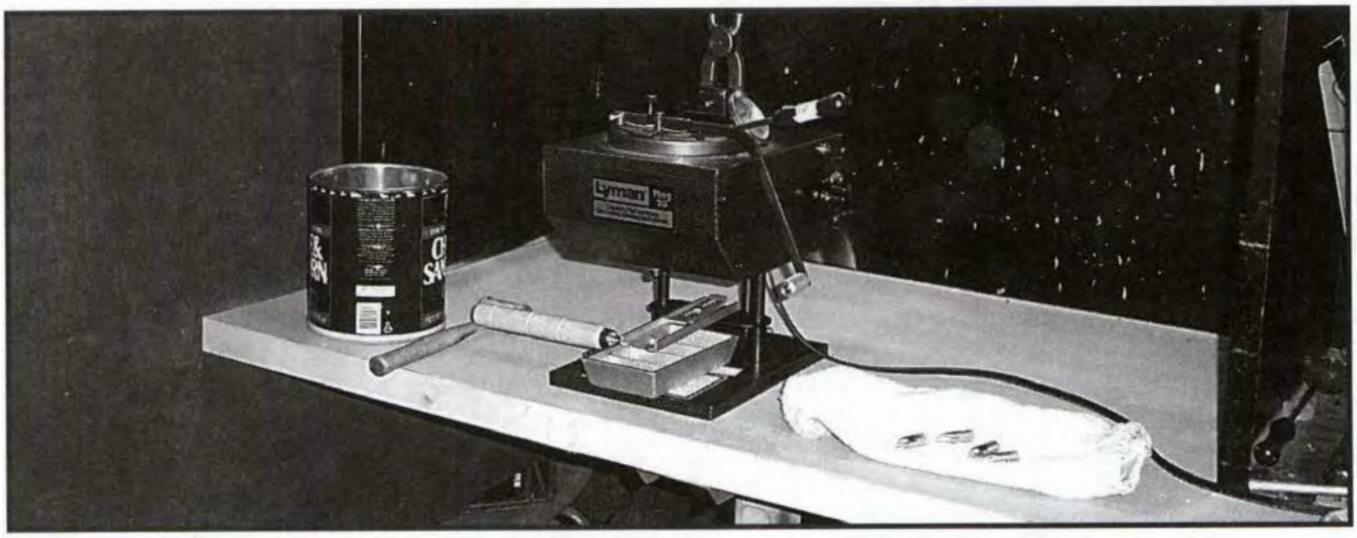

*Bullet casting should always be conducted in a well ventilated area with all necessary precautions observed.*

**CAUTION:** The making of cast lead bullets exposes the reloader to the potential risk of burns and the risk associated with accidental introduction of lead into the body. The reloader must take all the necessary steps to prevent either occurrence. It is important to read and adhere to all of the precautions listed in this chapter and those included as instructional material when you purchase lead bullet casting and reloading equipment. These and all other necessary safety steps are the responsibility of the reloader.

### Cast Bullets Are Economical And Easy To Make

One advantage of cast bullets is their low cost - just pennies apiece. A box of twenty 30-06 rounds assembled with cast lead bullets will cost about $3.00; similar jacketed bullet ammunition may cost four or five times as much. Cast bullets also allow for extensive shooting without barrel wear. Barrels seem to last indefinitely when used exclusively with cast bullets.

Casting lead bullets requires the melting of a suitable alloy, pouring the melt into a mould, allowing the alloy to harden, dropping the bullet from the mould, and sizing/lubing the bullet to an appropriate diameter. The loading of cast bullets requires the edge of the case mouth to be slightly flared, allowing the cast bullet to be started into the case without shaving metal from its base. All of these steps are straightforward and not at all complex. However, as in all aspects of ammunition making, specific cautions are important. These are as follows:

## CASTING PRECAUTIONS

1. Always cast in a well ventilated rea - ideally outdoors. Never breath lead dust, lead fumes, or fluxing fumes.

2. If gas heat is used to melt the lead metal, it is important to take steps to prevent the inhalation of carbon monoxide.

3. Use only properly grounded electric melting pots. These are identified by a three prong plug. Do not circumvent proper grounding. Lack of grounding can cause serious electric shock.

4. Always wear heavy protective gloves, aprons, and goggles or face shield. Splatters of hot molting lead cause serious burns. Cover all parts of the body with thick protective apparel that will withstand burning through in case of an accidental spill or splatter.

5. Keep all others away from the casting area.

6. Be certain to use the melting pot only on a surface that is 100% free of any potential for the pot to be tipped or knocked over. Anchor the pot to the work surface. Never leave a pot unattended, not even for brief seconds.

7. Be cautious with fluxing materials. Avoid flammable style flux in favor of noncombustible types.

8. Place a suitable container under the pot spout to catch leaking or spilled metal to prevent unintended damage to property or people.

9. Never eat, drink, or smoke, and keep hands away from mouth, when handling lead in any manner. Thoroughly wash hands after lead handling operations.

10. Water, even minute amounts, will cause violent eruption of molten lead. Make sure all equipment is absolutely free of any moisture. Keep moisture of any source away from the casting area, including condensation on any overhead pipes.

11. Primers, loaded ammunition, and other substances, introduced into the hot melt, will cause violent eruption of the molten alloy. Keep all potential accident causing items out of the casting area. Take meticulous care to sort all lead alloy being ready for melting to eliminate any chance of introducing anything but bullet alloy into the melting pot.

## Getting Started

Make certain that the apparel chosen covers all parts of the body. Don't forget the importance of protecting ankles and feet from burns. There should be no area of exposed skin to be burned in an accident.

The basics tools of bullet casting equipment include:

1. Bullet mould and handles.
2. Lead or lead alloy
3. Melting pot and dipper. (If a bottom pouring electric furnace is used, a dipper is not required.)
4. Alloy fluxing material and something to stir the flux into the molten alloy. An old large spoon works well.
5. Suitable mallet for tapping open the mould sprue-cutter plate.
6. Soft pad of nonflammable material on which to drop bullets from mould (perhaps an old ironing board cover).
7. Bullet sizing and lubricating tool.
8. Bullet lubricant.
9. Casting thermometer (optional).
10. Ingot mould (optional).

## Lead Alloys

The bullet alloy used should be dependant upon the intended application. Rifle bullets loaded to near maximum velocities should be made from a hard alloy to prevent barrel leading. An ideal alloy contains 5% antimony, 5% tin and 90% lead. This alloy has a Brinell Hardness Number (BHN) of 15. Pure lead (used for all muzzleloading projectiles) has a BHN of 5, while Linotype has a BHN of 22. The hardest alloys will help prevent barrel leading but will not expand. The softest alloys expand well but may result in barrel leading especially as velocities increase

**Composition and Hardness (BHN) of Useful Bullet Alloys**

| Alloy | Lead | Percent Tin | Antimony | BHN |
|---|---|---|---|---|
| Monotype | 72 | 9 | 19 | 28 |
| Stereotype | 80 | 6 | 14 | 23 |
| Linotype | 84 | 4 | 12 | 22 |
| Lyman No. 2* | 90 | 5 | 5 | 15 |
| Taracorp Magnum* | 92 | 2 | 6 | 15 |
| 1 to 1 Lead/Lino | 92 | 2 | 6 | 15 |
| Electrotype | 94.5 | 3 | 2.5 | 12 |
| 10 to 1 | 91 | 9 | — | 11.5 |
| 16 to 1 | 94 | 6 | — | 11 |
| 20 to 1 | 95 | 5 | — | 10 |
| 30 to 1 | 97 | 3 | — | 9 |
| Wheelweights* | 95.5 | 0.5 | 4 | 9 |
| 40 to 1 | 97.5 | 2.5 | — | 8.5 |
| Pure Lead | 100 | — | — | 5 |

* Responds well to heat-treatment.

**CAUTION:** Never attempt to salvage metal from any kind of battery. Doing so can be extremely hazardous.

## Some Casting Tips

Avoid getting any lead on block interface surfaces when casting. Even minute spots of bullet metal will prevent the mould from closing properly. Wipe away such spots while the mould is hot. Do not use a synthetic rag for this purpose but rather one of a natural material such as cotton.

Keep the sprue plate screw properly tensioned. The sprue plate should turn readily but not be loose. Excessive pressure of the plate on the mould may prevent proper venting or cause wear on the blocks. A sloppy fit will result in accuracy-destroying raised sprues on the bottom of the bullet. These raised sections can prevent proper seating when gas checks are required.

Never allow a mould to rust. (Rusted moulds can sometimes be cleaned up using steel wool.) If you protect a mould with a lubricant between uses, it will be necessary to degrease the mould before each casting session. Some folks simply store cool moulds in air tight containers with a desiccant to prevent potential rusting. This eliminates the need for degreasing before each use.

*The Lyman Mag 20 electric casting furnace features a thermostat for easy and precise temperature control.*

### Melting And Fluxing Bullet Metal

**CAUTION:** Be certain to wear protective clothing as previously described as well as heavy leather work gloves and goggles whenever working with molten bullet metal.

The melting pot must be capable of heating the bullet metal to 700 - 800 degrees Fahrenheit. A Lyman lead pot placed on an electric or gas stove will prove satisfactory. However the reloader will find an electric furnace made specifically for bullet casting to be faster and more convenient. Such units, properly used, are cleaner and quicker to work with. Their adjustable thermostats also make casting temperatures easier to maintain.

Whether blending raw metals into bullet alloy and forming ingots, or actually making bullets, the same melting and fluxing procedure is followed. It will take about 20 minutes for the solid metal to melt. When it is hot enough to flow freely, the melt needs to be fluxed to remove all impurities. To do so, drop a small bit of fluxing material into the pot. It is best to use Marvelux (a dry fluxing material available from Brownells). There will be no smoke or greasy fumes when using Marvelux and a good flux will be obtained. Next, stir the melt with a dipper. Stir deeply, frequently introducing a dipper full of air into the melt. The air helps with the fluxing.

The surface of a properly fluxed melt appears almost mirror bright and contains flecks of burned brown and black impurities. These must be skimmed off using a spoon like tool that has an insulated handle. During casting, as soon as any impurities are seen on top of the melt, it is time to again flux.

**CAUTION:** Be extremely careful when fluxing to prevent tipping over the pot or any splashing any of the molting alloy.

**CAUTION:** The material skimmed off is very hot, perhaps 800 or more degrees. Dispose of it in a safe fire proof container that will not be accidentally turned over.

### Bullet Casting

After fluxing, the melt is ready for casting. The melt temperature must be maintained or the cast bullets will not be as expected. The nearby drawings show some common bullet problems related to temperature control. It is important to realize that proper temperature control also includes keeping the mould (and dipper if one is used) at the correct temperature. Thus, the casting pace may need to be increased or slowed, if you find the mould is too cold or too hot.

Allow the mould to preheat by resting it on the edge of the electric furnace. If you are using a cast iron pot with an independent heat source, heat the mould to casting temperature by repeatedly filling it with lead until the bullets are properly formed.

Each caster tends to develop their own routine. Beginners often find the following method works well.

*Before fluxing, bullet alloy will have a dirty, lumpy appearance. After fluxing, the bullet alloy will have a bright, almost mirror-like appearance.*

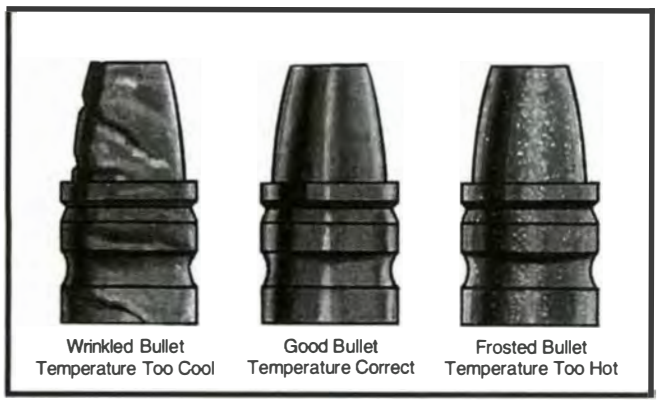


Fill the dipper with melt. Then, with the top of the bullet mould held vertically, place the dipper's poring spout into the sprue plate hole on the mould. Next, rotate mould and dipper as a unit so that the top of the mould is horizontal and the dipper is above it. Now, tip and pull the dipper slightly away to allow a small amount of alloy to fill the concave area of the sprue cutter plate. If this is not done, as the melt solidifies, a hole will form in the base of the bullet. Remove the dipper.

Wait several seconds for the bullet to harden. Small light bullets, i.e. 22 caliber bullets, will harden faster than large caliber heavy bullets, i.e. 45-70 bullets. Pace yourself so that the bullet is hard enough to prevent damage as it falls from the mould. Speed up or slow down, as required, to keep the mould at an appropriate temperature for proper bullet forming. Small diameter light bullets will require a faster pace than the larger bullets.

After the bullet cools in the mould, use a wood dowel or mallet to strike open the sprue plate, shearing the sprue from the base of the bullet. Push the sprue plate around far enough to fully clear the opening in the mould. Never use more force on the spruce plate than necessary to shear the sprue from the bullet base.

Allow the sprue to drop into a fireproof container. If bullet bases have a cavity or concave shape on the base, allow more of a sprue to form. The largest bullets will require the largest sprues.

If lead smears appear on the top of the mould, after rotating the sprue plate, allow the sprue to more completely solidify before cutting it off.

Bullets will not fill out correctly until the mould reaches the proper temperature. A dozen, or more, casts may be required before well formed bullets are obtained. Imperfect bullets can be dropped into the sprue container to be remelted at another time. Do not be tempted to heat the mould by sticking it into the melt. Such action will bring more grief than may first come to mind.

If the mould overheats do not attempt to cool it in water or use any other artificial means to lower its temperature. The only safe method is to set the mould aside and allow a bit of time for it to cool.

Wrinkled, or less than perfectly filled out bullets suggest that the temperature of either the melt or mould is too cool. Frosted bullets, or bullets which break apart easily, suggest that the either melt or mould is too hot. Properly cast bullets have sharp edges and appear clean and bright.

**CAUTION:** Do not drop poorly formed bullets or sprues back into the melting pot. Doing so can cause molten metal splashes which can result in serious burns or property damage.

It is a good practice to weigh all cast bullets to eliminate those with air voids. A good caster will make bullets that will vary no more than a half grain from the average weight for the lot. Those that vary more than this amount should be culled and remelted at a latter date. The actual weight of your bullets will vary with specific alloys. Bullet weights also vary from lot to lot even when using the same type of alloy. Thus, it is a good practice to segregate each lot of bullets.

### Gas Checks Improve Cast Bullet Performance

The metal caps often placed on bullet bases are called gas checks. These protect the bullet base from being melted by hot firing gases. Gas checks are essential whenever using high velocities. Protecting the bullet base from having bits of lead brought to the melting point, will prevent unnecessary bore leading and avoid inaccuracy. Gas checks, attached when sizing the bullet, must be seated squarely or accuracy will be adversely affected.

*Lyman cast bullet #375449. (l) Sized, lubed, and ready to load. (r) Recovered from a Wild Boar. This bullet was cast from an alloy of 12 bhn and fired at approximately 1,750 feet per second at a distance of 80 yards. It expanded to double its original diameter with a retained weight of 264.7 grains—perfect!*

When used with a high velocity bullet lubricant, rifle bullets cast of a hard alloy and protected with a gas check can withstand velocities in excess of 2,000 feet per second. Some cast bullet users find it possible to exceed even 2,500 feet per second when everything is right and the bore is perfectly smooth. However, under normal circumstances most rifle shooters do best with velocities of about 1,800 feet per second.

Gas checks can be applied only to bullets with a rebated base specifically designed for the purpose. Gas check style bullets may be used without the gas check applied, if velocity is kept modest.

**CAUTION:** Old style press-on gas checks should not be used when bullet bases go below the case neck. This will avoid having a loose gas check fall into the powder charge. Accuracy, with any style cast bullet, will always be best if bullet bases are completely contained within the neck of the cartridge case.

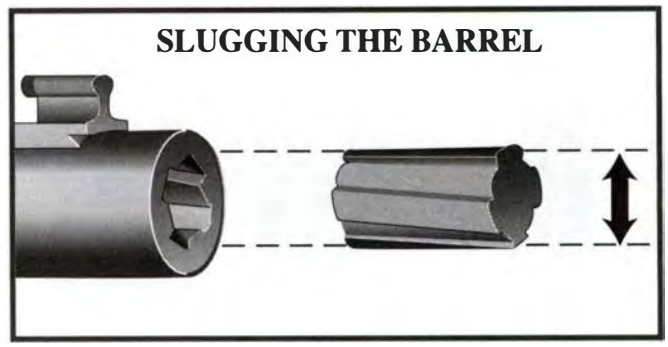


*Starting at the muzzle end, a soft lead slug (slightly larger than the groove diameter) is driven through the barrel. When the slug is retrieved on the breech end, it will be perfectly engraved and clearly marked by both the lands and the grooves. Measuring (with a micrometer) the diameter of this slug at its widest point will determine the groove diameter of the rifle. Bullets should conform to this dimension.*

### Sizing And Lubricating Cast Bullets

Sizing cast bullets is required to ensure bullet diameters of a nominal dimension. Usually bullets are sized to, or just larger than, the actual groove diameter of the firearm to be used. To determine the actual groove diameter of any firearm, its bore should be slugged.

A slightly oversized lead slug driven through the bore and measured, will provide the barrel's smallest diameter. (Some shooters prefer to size to the diameter of the barrel at two inches in front of the chamber.) When searching for the best accuracy, first try a sizing diameter equal to the bore dimension. Then try bullet diameters of 0.001" and 0.002" larger.

Great care must be used when slugging a bore so as not to damage the bore surface. The rod used to drive the slug through the barrel must be close fitting and have a slight radius on the outside edge. If the rod buckles or scraps on the bore, irreparable damage could occur. If in doubt it is best to have a qualified and experienced gunsmith do the bore slugging.

Many shooters do not actually slug their bores, but rather start with a sizing diameter to match the diameter of jacketed bullets nominally used for their cartridge. This is a practical approach for the first series of accuracy tests. If the first tests do not provide the desired accuracy, a second series of attempts can be with bullets sized 0.001" larger. A third sequences can be with bullets 0.002" larger. It is counter productive to use any larger sizing diameter.

Note: Seldom are barrels undersized; rather when they vary from the nominal they are usually oversized. (It should be noted that some barrels of European manufacture have been found to be undersized.)

### Sizing And Lubricating Tips

Lubrication of bullets demands a proper flow of lubricant. This is usually not possible when the ambient temperature is less than 70 degrees Fahrenheit, and warmer is better. This is particularly true with some of the hard, high performance lubes that are available. Note: It is possible to damage a lubricator by applying to much force in an attempt to force cold lubricant into the bullet groove(s). Heating plates are made by Lyman and others, which warm the lube/sizer press and eliminate this problem.

Note: The bullet should be pushed into the lubricator with the correct top punch. If a poor fitting top punch is used the bullet will be sized misaligned. Such a condition is contrary to the goal of accuracy. Always use the exact top punch required for the bullet to be lubricated.

If bullet lube forms on the bullet base, it may be due to excessive pressure on the lube in the reservoir. It could also be due to improper adjustment in positioning the bullet in the sizing die with respect to its relationship to the lubricant orifices. The design of the bullet can also cause this. Bevel base bullets often get lube in the bevel area. Be sure to remove any lubricant from the bullet base in order to prevent contamination of the powder charge in a loaded round.

Do not store lubricated bullets as the lubricant may pick up contaminants that would be harmful to a bore. Size and lubricate only the number of bullets that will be loaded in a single session.

If a lubed bullet is dropped on the floor, or otherwise picks up contaminants, discard it or carefully remove all lubricant and contaminants from the bullet. It may then be relubed.

Keep in mind that undersized bullets are a detriment to accuracy. If sizing at nominal bore diameter (and then increasing to 0.001" and 0.002" over nominal) does not give the desired results, slugging the bore becomes mandatory. If such slugging shows the bore to be as expected then it is reasonable to look to other areas for the cause of the inaccuracy. If the slugging shows a non-typical barrel, then the appropriate bullet sizing diameter can be addressed. Keep in mind that it is not practical to reduce a bullet's as-cast diameter by more than 0.002". Doing so negatively affects accuracy.

Consistency is the secret to success. Every effort should be taken to insure that each bullet is the same as the last. When testing alloys, lubricants, or sizing diameters do so only by changing one aspect at a time. Keep good records of the results to be certain that things do not become jumbled in memory.

### Handgun Lead Bullet Tips

Handgun bullets cast of soft lead will expand if they have sufficient impact velocity (about 850 feet per second). This is equally true of flat nosed bullets as well as hollow point types. Naturally, the lead hollow points do expand somewhat faster than a lead round nose type, with other nose styles falling somewhere between. However, bullets cast with a hard alloy will not expand regardless of nose configuration.

Wadcutter style lead bullets will leave large diameter sharply cut holes in paper targets and are preferred for this reason. At normal target shooting distances (up to 50 yards) wadcutters are very accurate. However, there is a range limitation for wadcutters with respect to bullet stability. Depending upon velocity, bullet length, and base configuration, at somewhere between 60 and 100 yards most wadcutters will start to tip and eventually begin to tumble. Because of this, those wishing clean cut holes in targets at ranges past 50 yards frequently chose a semi-wadcutter bullet, for example the Lyman mould numbers 358429 and 452424 - Keith style bullets.

**CAUTION:** When loading hollow base lead bullets (hand cast or purchased) it is necessary to avoid very heavy loads. It is possible for the front of such a bullet to be separated from the skirt portion leaving the skirt stuck in the barrel. The separation is caused by firing pressures forcing the skirt tightly against the bore while pushing hard against the forward internal head surface. If the strength of the lead alloy is exceeded the bullet comes apart. Such a condition is very dangerous should another round be fired while the skirt is stuck in the barrel. Thus, hollow base handgun bullets should be used only for light target loads.

## Suggested and Alternative Sizing Die Diameters

| PISTOL<br>Caliber | Dia. (inches) |
|---|---|
| .22 Jet, .221 Fireball | .224★, .225 |
| 25 ACP | .251★ |
| .25 cal. | .257★, .258 |
| .30 Luger, 30 Herritt, 30 Mauser | .310★ |
| .32 ACP, .32/20, .32 S&W, .32 H&R Magnum | .311, .312, 313★, .314 |
| 9mm Luger*, .38, .38 Super Auto, .380 Auto | .354, .355★, .356 |
| 38 S&W, .38 Spl., 357 Mag.*, .357 Max. | .357, .358★, .359, .360 |
| 9mm Makarov | .363 |
| .38/40, 10mm Auto, 40 S&W | .400★, .401 |
| .41 S&W Mag., 41 Action Express | .410★ |
| 44 S&W Spl., 44 Mag.*,44 Russian | .429★, .430, .431 |
| 45 ACP, .45 Auto Rim, .45 Colt* (post-WW II), .45 Sch. .45 Win. Mag. | .450, .451★, .452 |
| .45 Colt (pre-WW II) & .455 Webley | .454★ |
| **RIFLE<br>Caliber** | **Dia. (inches)** |
| .22 cal. (except .22 Hi-power) | .224, .225★ |
| .243, .244, 6mm | .243, .244★ |
| .25 cals. | .257, .258★ |
| .264 Win. Mag., 6.5mm | .264★, .266 |
| .270 Win.* | .277, .278★ |
| 7mm, .280 Rem., .284 Win. | .284, .285★ |
| .30 cals. | .308, .309★, .310 |
| 7.62mm Russian* | .310 |
| .32/20 Win. | .311, .312★ |
| 7.65mm Mauser* | .311 |
| .303 British*, 7.7mm Jap.* | .313, 314★ |
| .32 Win. Spec. 32 S.L., .32 Rem. | .321 |
| 8mm Mauser (S Bore) | .323, .325★ |
| .338 Win., .33 Win. | .338★ |
| 9mm x 56, 9mm x 57 | .354, .355★, .356 |
| .35 cal. | .357, .358★, .359 |
| .375 H&H Mag., .375 Win. | .375, .377★, .378 |
| .38/55* | .379 |
| .38/40 | .400, 401★ |
| .40 Cal. Rifle | .406, .410 |
| .44/40 | .427, .428★ |
| .44 Spl., .44 Magnum | .429, .430★ |
| .444 Marlin | .430, .431★ |
| .43 Spanish | .439 |
| .45/70, .458 Win. | .457, 458★, .459 |
| .50 Cal. Rifle | .509, .512★ |

* Wide variations in diameter. Suggest you slug barrel.
★ Indicates suggested useful diameter, which may vary from gun to gun.

# Section 4

Chapter Ten
The Road to Accurate Ammo . . . page 88

Chapter Eleven:
The Mystery of Pressure . . . . . page 96

Chapter Twelve:
The Flight of a Bullet . . . . . page 102

Chapter Thirteen:
Reloading the 45-70
for Accuracy . . . . . page 112

Chapter Fourteen:
Barrel Care and Cleaning
for Accuracy . . . . . page 120

# 10 The Road to Accurate Ammo by Bryce M. Towsley

"Only accurate rifles are interesting."
*Col. Townsend Whelen*

It's at this point that most gun scribes get a little misty eyed as they blindly agree with the Colonel before launching into their thesis on how to achieve accuracy. But, with all due respect to one of the greats of gun writing, I must diverge from Colonel Whelen's famous statement. It's not that I have anything against accurate rifles; it's just that I have owned some inaccurate rifles that were pretty damn interesting.

*Bryce M. Towsley. Remington Model 700 .35 Whelen. 100 yard group. Handloads with RL-15 powder and 225 grain Barnes X-Bullets.*

Besides, what is accuracy? It's a term that is thrown around rather carelessly by shooters with little defined information about what exactly we are talking about. Is an accurate rifle one that will shoot a minute of angle? If so, how many shots in the group? Three, five, ten? How many groups should be fired to determine the "average" group size and establish the accuracy standard for that rifle? Should the rifle be able to do that from a cold barrel and place the first shot clustered tightly with all those that follow? Or should this rifle be "accurate" only after a fouling shot or two has warmed the barrel? If you are a long-range hunter the first shot is the most important, so accuracy here might be defined as exact predictability for the first shot. You may measure that by shooting a ten-shot group while firing one shot each day for ten days. If you are a varmint hunter you will likely define the accuracy of your rifle by how consistently it shoots with a fouled and heated barrel. If it's accurate for the first shot, or even the first five shots, but starts scattering bullets after that, it's useless to you.

Lots of rifles will group three shots in less than an inch, fewer can do five or ten and it's a special rifle indeed that will put every shot inside that magic circle. But is one MOA acceptable accuracy for a varmint rifle? Isn't a serious varmint gun that can at best keep its bullets in one inch a bit on the "inaccurate" side? What of a benchrest competition gun? Would you be competitive at the top level with a gun only capable of one MOA accuracy?

Conversely, I have seen very few lever action deer rifles that will come close to shooting to one MOA. But does that make them "inaccurate" rifles? Compared to what? What standard of accuracy is needed for hunting whitetail deer in the thick brush? What actually defines an "accurate" Winchester Model 94 in .30-30 Winchester?

Or any other rifle, for that matter?

*A smooth light trigger pull is important for accuracy testing. Lyman's Digital Trigger Pull Gauge allows for precise trigger pull measurement.*

In the end we must accept that "accuracy" is a relative term with no single correct answer. What is considered "accurate" for one type of rifle would be unacceptable for another. I have a lever action rifle that can consistently group three shots in less than an inch and a half at 100 yards. Not just a lucky group now and then, but every time I try. That's an exceptional rifle. I also have a heavy barrel varmint rifle that shoots about the same. In this case it's a poor shooter and should be rebarreled or replaced.

In my world, accuracy is when any rifle is shooting the best it can with ammo best suited for the use that rifle is intended for. If your handloads are designed and constructed so that your rifle is running at peak performance, then you can claim you have an accurate rifle and I won't argue. How you determine that is up to you, but I'll give you my "protocol."

Big game hunting guns are fired with three shot groups and I allow the barrel to fully cool between groups. Varmint guns are fired with five shot groups and I do not let the barrel cool between groups. But I don't let it get any hotter than I would allow in the field. Usually, when it's too hot to touch it's time to let it cool off. I use a minimum of five groups, but usually ten groups, and take an average. When I can no longer achieve a smaller group average with anything I am doing with my handloads I figure I have the most accurate load for that gun.

Now, to be truthful, I don't always take this to its final conclusion. At some point you need to end the search or accept that you can wear out your rifle trying to achieve perfection. So it's best to have a "target goal" to strive for. For example, if I have a big game bolt-action rifle that is consistently shooting to less than one MOA I usually quit experimenting. Perhaps I can shave another eighth or quarter inch off the group average, but why? It will gain nothing in the hunting fields. The same with a varmint gun, if I have it shooting consistently under a half-inch I save the barrel for varmint hunting. No point in shooting it out just to try to shrink the group average a few tenths of an inch. Better those hundreds of rounds are spent on prairie dogs, which is why I have the gun. The point is I usually set an arbitrary, but fairly tough goal for the rifle and when I have achieved that I consider that my handloads are "accurate."

The key to creating accurate ammo for your rifle can be found in the three "Cs"; Consistency, Compatibility and Concentricity.

Consistency is first. Accurate ammo is no place for rebels. Individualism is frowned upon as accuracy favors conformity and to be accurate, ammo must be uniformly the same. Consistency simply means that each round of ammo is loaded exactly the same as the round before it and the round to follow. The more consistent the ammo is in every respect, the more accurate it is likely to be.

Compatibility recognizes that each rifle is an individual and that no two will be exactly the same. The best load in my rifle may not be accurate in yours. Rifles often have strong preferences about bullets, seating depth, powder selection and charge weight. Even something as simple as the primer can make a difference.

Finally concentricity. Ammo and rifle barrels are basically round. Bullets are round, cases are round, chambers are round and bores are round. So the more concentric our ammo, the more accurate it will be. The more round we keep it and the better the alignment with the round parts of the gun, and the more accurately it will shoot.

Achieving these goals is not difficult, but it does require attention to details and a thoughtful, linear approach to designing and building the ammo. As with building anything, the key is the foundation. The foundation for any cartridge is the case.

Pick a quality brand of brass from a company that pays attention to quality control. Ideally, cases should be new or once fired in the same gun you are loading for. Weigh the cases and throw out any that deviate from the average by more than a few grains. This is accomplished fast and easy with an electronic scale.

How you resize your case is important to accuracy and to reliability. The chamber in the rifle is designed to mimic the shape of the cartridge case, only slightly larger. This allows enough clearance for the unfired cartridge to enter the chamber. Brass is relatively elastic and as the pressure increases the case will expand until it encounters the chamber wall. The chamber will then support the brass, keeping it from expanding further. This directs the pressure to the base of the bullet and pushes it down the rifle bore. The expanded brass also forms a seal against the chamber walls that prevents the gas from flowing back between the cartridge case and the chamber.

If the brass were to remain in this "expanded" mode, tight against the chamber wall, it would stick and be difficult or impossible to extract from the rifle. However, because of its elasticity, once the bullet exits the muzzle and the pressure drops, the memory in the brass will cause it to contract. This again creates enough clearance to allow the empty case to exit the rifle. However, it does not contract as much as it had expanded. And while the case should fit easily back into the chamber, the neck will not hold a bullet.

A rifle chamber must be designed to allow the neck area of the cartridge to expand enough to easily release

the bullet. If it cannot because the chamber's neck is not sufficiently larger than the outside diameter of the cartridge case neck, pressure will be too high as the bullet fights its way free from the vise-like grip of the too-tight neck. In order for this to work correctly, the amount the brass must expand is enough that the rebounding case neck's inside diameter will still be too large to correctly hold a bullet in a fired case. It's a rather fine line, as the neck must expand enough to release the bullet, but too much space will degrade accuracy.

Other than the neck being too large to hold a new bullet, the case is now at the maximum dimension for reuse in that rifle and a perfect fit for that chamber. This is because it has been fire formed to that rifle's chamber, which can be a good thing. When a rifle is made, the chamber will be cut to fit within a given set of tolerances. If the chamber reamer is new, it might be on the large side of this tolerance scale. If the reamer is old and worn, it might hit the small end of the chart. Millions of rifles are chambered for a given cartridge with thousands of different reamers. Throw in the variations in worker skill or quality control, and no two chambers in a given caliber selection will be exactly alike. To make factory ammo work in this wide diversity of rifle chambers, the cartridge must also fall under specific tolerance guidelines. If it's too big, it will not chamber in some rifles. So, to play the odds, ammo makers are going to favor the smaller end of the tolerance scale. As long as it chambers in all rifles and doesn't have any problems with headspace, that is the smart approach in making factory ammo. But, as Colonel Whelen himself said in a 1919 *Outdoor Life* article, "Tolerance is the antithesis of accuracy."

Because of that pesky concentricity thing, accuracy with factory ammo is not always all it can be. The closer a bullet is aligned with the rifle's bore when a cartridge is chambered, the more accurate that ammo is going to be. When ammo is smaller than the chamber (because of the tolerances), it lies on the bottom of the chamber, which tilts the bullet slightly out of alignment with the bore. Brass that has been fired in the same chamber is then fire formed to that chamber. The case fills all the space except what is needed to allow the cartridge to enter or exit. The shoulder of the case fits against the shoulder of the chamber and the end result is that the bullet is more closely aligned with the bore. In theory, the ammo should be inherently more accurate.

Full length resizing will bring the outside dimensions of the case back to "factory" specifications. For big game hunting where reliability is probably more important than accuracy, full length resizing makes sense. Hunting ammo should have a little "tolerance" built in to allow for changes in conditions. The last thing you want is ammo that chambers hard, or not at all when you are hunting in snow or the gun is dirty. While full-length sizing may shorten the life of the brass a bit and cut the accuracy slightly, it also increases the reliability of the ammo.

*Two 7mm TCU cases that have been smoked in a candle flame and sized. Case on left is neck sized only, case on right has been full length sized. Also note the hard contact with the shoulder on the right case.*

For varmint or target ammo that will be used in a bolt-action rifle, consider neck sizing only with a "neck-size only" die. This will bring the neck back down to the proper size to hold the bullet, but leave the rest of the case formed to fit the rifle's chamber, creating more accurate ammo.

Neck sizing should only be used if the case is going to be fired in the same chamber it was used in previously. Chamber tolerances are enough that a cartridge that has been fire formed in one gun may not fit in a different rifle. To work best, the case should also be indexed in exactly the same position in the chamber. Some shooters make a "witness mark" on the brass so that it can be oriented exactly the same way every time. This mark usually will be placed at the top each time the case is chambered. If the chamber is not exactly centered with the bore, or if it's out of round (as it is in

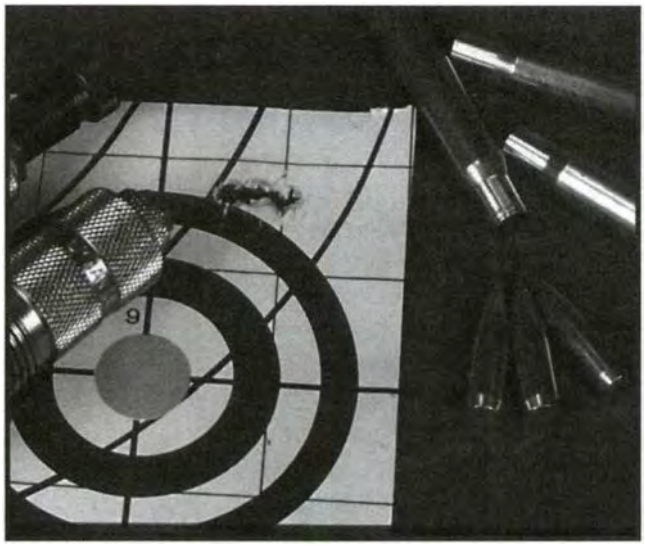

*These cartridges had the necks turned and sized. the goal is better accuracy.*

one rifle I own) this insures that the brass shape mates correctly with the chamber shape.

The brass will "spring back" a little less each time it is used and after a few firings it may become difficult to close the rifle's action. At this time the case should be run through a full length sizing die that is adjusted to bring it back to the minimum dimension needed for your rifle.

This is actually a viable alternative to neck sizing. If once-fired brass was used in the same gun you will be shooting the handloads in, you might also consider adjusting the sizing die until it just contacts the shoulder. This will resize the brass as fully as possible without pushing the shoulder back. It will enhance accuracy, reduce any possibility of misfires from excessive headspace and extend the life of the brass. It also saves the price of an extra neck-sizing die and creates ammo that is still more accurate than full length resizing, but more reliable than neck sizing only. The trick is to adjust the full length resizing die so that it resizes the neck, partially resizes the body and pushes the shoulder back only when it becomes necessary. This is done by adjusting the die so that is just contacts the shoulder on a once fired case, but does not move it. The easiest way I have found is by smoking the lubricated case in a candle flame and watching how the die rubs the soot off the case as it's sized. Start with the die backed out in the press and turn it in a little at a time, sizing a marked case each time, until it is contacting the case correctly. Then lock it in place.

This works well for any bottlenecked cartridge that is designed to headspace off the shoulder. It will also provide more accurate ammo with belted magnum cases, as it will cause the case to headspace off the shoulder instead of the belt and will align the cartridge with the bore more precisely. A cartridge headspace gauge also is easy to use and accomplishes the same task.

Neck turning insures that the brass in the neck is the same thickness all the way around, which helps to keep bullet tension and release consistent, which can aid in accuracy. It's all part of "concentricity." This can be a bit time consuming, but is often worth the trouble.

Inside neck reaming will reduce the thickness, but this process will not insure the thickness of the brass remains the same around the perimeter of the neck. Outside neck turning is usually a better solution. Because the inside of the neck in a sized case is round and neck turning removes metal from the outside of the case, the brass thickness will be "trued-up" all around the neck.

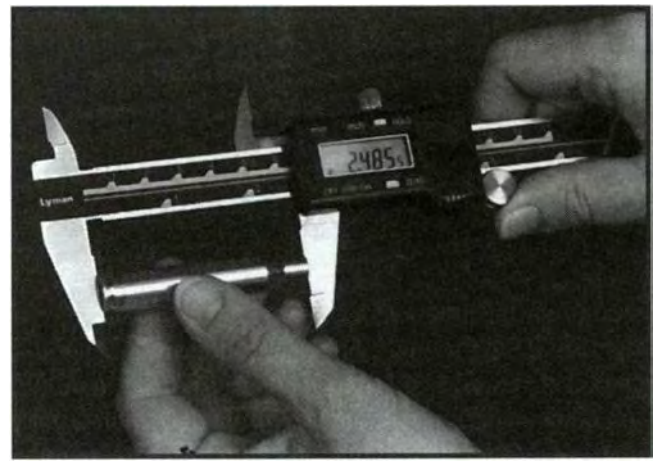

*Lyman Stainless Electronic Digital Caliper measuring a case.*

Clean the cases in a vibrating or tumbling case cleaner. This removes all lubricant as well as polishes the brass. Use a dial caliper to measure the length of each of the cases to find the shortest of the lot. If it is less than the maximum case length listed in the loading manual, adjust your case trimmer so that the cutter will barely "kiss" the neck. Make sure that the cutter has removed metal all the way around the neck so that the entire circumference is shiny. If the case is longer than the maximum case length, trim it to the correct length. Once you have the trimmer set up, trim all the cases to this same length. Deburr the outside of the case neck and chamfer the inside slightly. For most handloading, a hand-held tool will work fine for this. If you are going to be loading lots of ammo, the electric Lyman Power Deburring Kit takes some of the work out of it.

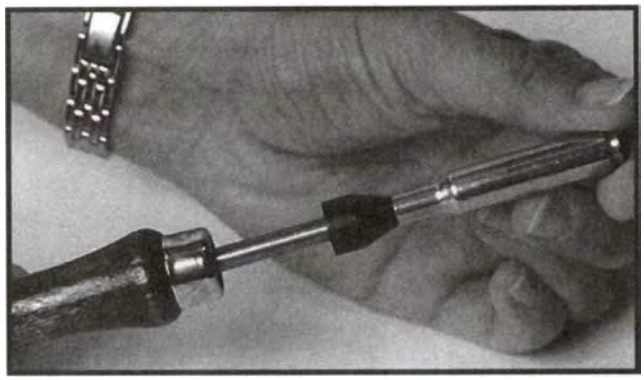

*Lyman Flash Hole Uniformer being used on case.*

The burr inside the case made by punching the flash hole through the head should be removed to insure an even flow of the flame from the primer to the powder. The Lyman Flash Hole Uniformer is designed for this job. Then square the bottom of the primer pocket with a Primer Pocket Uniformer. These last two steps are "one-time" only and will not need to be repeated for any subsequent loadings.

*Lyman Primer Pocket Uniformer was used to square this primer pocket.*

Each primer must be seated fully in the primer pocket without crushing or distorting the primer. This is done best with a hand tool that allows the user to "feel" the primer as it contacts the bottom of the primer pocket. This keeps the primer from being crushed or damaged from too much pressure and still insures that the legs of the primer anvil are all fully supported. Seating the primer with all three legs of the anvil on the squared bottom of the primer pocket insures that none of the firing pin energy will be wasted by pushing a partially seated primer further into the pocket. Also, a high primer, one that's not fully seated, can cause feeding or chambering problems.

One area of confusion for any handloader and particularly for one new to handloading is the question of which powder to use? Most manuals don't help much. Instead of saying, "use this powder" they list several for each bullet and often dozens for each cartridge. This manual is different than most because it lists the most accurate powder tested for each bullet and cartridge and that's always a good place to start. Often a gun will show a preference for one powder over the others, but it's not always the same from gun to gun. That's that "compatibility" thing mentioned earlier. It's likely that to find the best load for a particular gun and bullet you will need to test more than one powder.

*Bullets, primers, cases, powder and dies for .220 Swift and .243 Winchester.*

When trying to decide on a powder in a cartridge that you are unfamiliar with, another good rule of thumb is to choose the powder that is giving the highest velocity listed in the loading manual for the bullet you are using. Usually that, or the most accurate powder tested in the Lyman labs will be your best choice. With all that said it's likely that more than one powder is going to produce good results in your ammo, so the search shouldn't be as complicated or as expensive as it sounds.

So how do you know if you made the right choice? Accuracy is one place to start the search. If you have tried several powder charge weights, experimented with a couple of different bullets and various bullet seating depths and still can't make your handloads shoot accurately, it's time to try another propellant. More on bullet seating depths later.

If you don't have a chronograph, beg, borrow or steal one. No handloader can accurately evaluate their work without shooting through a chronograph. They are not expensive and without one you are mostly spinning your wheels. One of the pieces of information it will give you is the standard deviation. This is a measure of the uniformity of velocity with your loads. The lower the number, the more accurate the ammo should be. If you simply cannot get the standard deviation number down to a low number, take that as another indication that you probably are not using the best powder.

One other consideration is the style of powder. Loading for high volume shooting such as prairie dog shooting might call for a compromise in performance in return for ease of loading. Most extruded powders do not flow well through a powder measure and for best results every charge should be checked and adjusted on a scale. This takes time. Not a problem when you are loading 20 cartridges, but if you are loading 500 it can become a big bottleneck in the process. A ball powder will flow through the powder measure consistently and you can simply charge your cases from the adjusted powder measure and spot-check every ten cases. If the ball powder happens to shoot groups that are a 1/4-inch larger than an extruded powder, the ease and speed in loading is a fair trade off.

With most rifle powders other than ball style, it's best to weigh every powder charge. Adjust the powder measure to throw a charge that is about a half a grain under your desired weight. Put this on the scale and use a powder trickler to bring the charge up to the correct weight. This insures that each powder charge is consistent from cartridge to cartridge. Use a powder funnel to charge the case and then stand the charged case up in a loading block. Once all the cases are charged with powder, hold the block under a light to visually check to see that every case has powder and that all the powder charges are the same volume in the case.

On thing to remember when testing powders is to never have more than one can of powder on your loading bench at any time. When you have finished with that powder, pour the unused portion back into the can, seal it and put it in storage away from the loading bench before bringing another powder to the bench. This prevents mix-ups in which powder is being used and prevents inadvertently pouring the unused powder into the wrong container and contaminating the powder in that can.

While the options can be narrowed down by doing your homework ahead of time, the answer to the "what's the best powder" question is impossible to say for sure before loading and shooting. That answer can only be found by burning some of the powder under controlled conditions and assessing the results.

The keystone of any handload is the bullet. It's the only physical connection with the target and considerable thought should be given to its selection. A quality game bullet that is also very accurate used to be as rare as a sober Elvis sighting, but bullet technology has

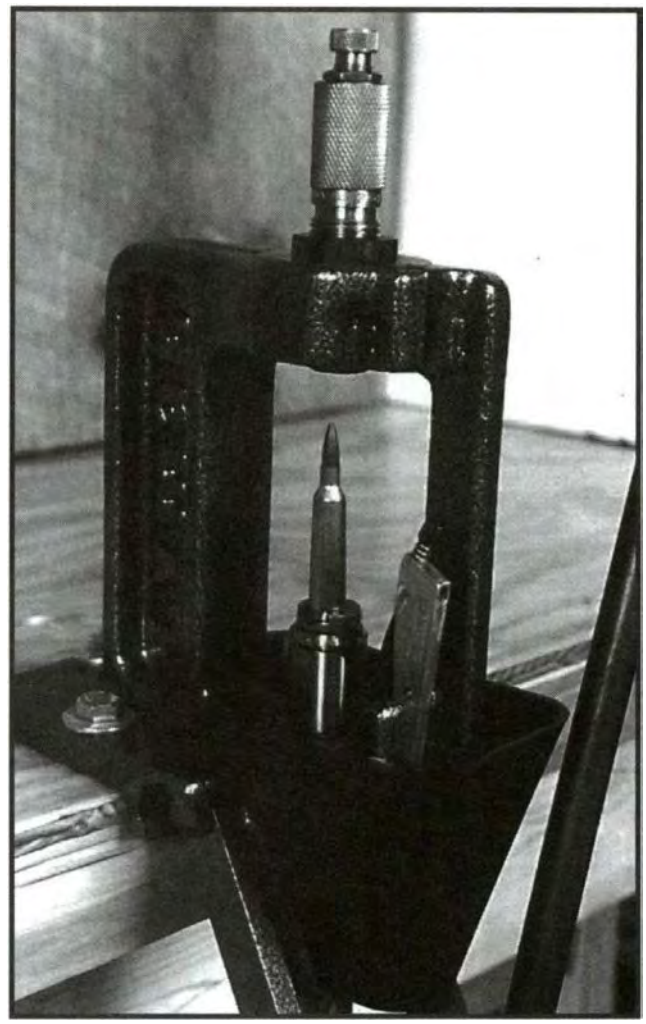

*Lyman Crusher II Reloading Press. With .22-250 cartridge. Barnes XLC bullet.*

advanced enough so that most hunting bullets will deliver excellent accuracy. However, the designs that make them good hunting bullets can also make them a bit temperamental. A "hard" bullet is not as forgiving of a rifle's idiosyncrasies as a thin jacketed, soft-core bullet and occasionally an individual rifle may not like a particular brand of hunting bullet. So, try another one.

If accuracy is the primary goal then of course you should concentrate your efforts on the various target bullets. But here again your rifle might not like a particular brand, so be prepared to try another.

One of the biggest reasons many shooters handload is the option to "tune" a specific load to a rifle. The handloader can improve on factory ammo because of the ability to tweak the handloads for the best accuracy from a given rifle. One variable that often makes a huge difference in accuracy is bullet-seating depth.

Seating bullets to the maximum overall cartridge length listed in the handloading manuals is always a safe, conservative approach, but it will rarely produce the best accuracy results. It is better to match the overall cartridge length to the gun for which you are loading the ammo. By experimenting with bullet seating depth, a rifle's accuracy can almost always be improved. Sometimes rather dramatically.

One graphic illustration of this can be found in my .280 Ackley Improved. When I was working up the initial handloads I simply seated the bullets to the suggested overall cartridge length for the parent .280 Remington. It would be an understatement to say the accuracy was disappointing. In investigating the problem, I found that the chamber had an unusually long throat. As a result the bullets were making an almost epic journey before they encountered any rifling. With the next batch of handloads I seated the bullets out in the case neck until they were .025" from contacting the lands. The average of several three-shot groups with this new ammo shrunk to a bit less than one inch. The ammo looks a little goofy, but the increase in accuracy was enough that I'll endure the jeers and laughter from my shooting pals.

The best starting point for any rifle cartridge is to seat the bullet until it has a gap of .010-inch to .030-inch before it engages the rifling. After shooting the ammo to test for function and accuracy, this can be fine tuned even more by experimenting with small changes in the seating depth and then shooting groups to judge the effect the change has on the rifle's accuracy.

The method of finding the seating depth I find easiest is to first resize a case, but do not seat a primer or charge it with powder. Seat a bullet in the case just far enough to hold it securely and gently try to chamber it in the rifle. The bolt likely will not close. Don't force it or the bullet will stick in the rifling and pull out of the case. One trick if that happens and you don't have a cleaning rod handy, is to drop a smaller diameter bullet down the barrel. This will usually dislodge a lightly stuck bullet.

Now, turn the seating adjustment stem on the seating die down one-quarter turn and run the case through the die again to push the bullet a little deeper into the case neck. Try the case in the gun again. Repeat this process until the bolt will just close without forcing it. The overall length of this cartridge is the "to the lands" measurement. Mark this dummy cartridge with a felt tipped pen and put it with your dies for future reference use. To adjust for the bullet to be off the lands, you would adjust the seating die to seat the bullet the selected amount deeper in the case neck than the "to the lands" dummy cartridge. For example, if the dummy case is 3.450-inch and you want a .020-inch gap between the bullet and the lands, you would adjust your seating die so the resulting overall cartridge length is 3.430-inch.

Once you have determined the bullet seating depth that is best for that bullet and load in your rifle, make up another "dummy" round with no powder or primer and the bullet seated to that depth. Mark it with the information and put it with your dies for that cartridge. If you load several bullets, the bullet-seating die will need to be adjusted each time it is used and that's where this "dummy" will earn its keep. Simply screw the seating stem out in the seating die until it will not contact the bullet, run the case fully into the die, then screw the seating stem down until it makes firm contact with the bullet and lock it in place. Now each succeeding bullet will be seated to the correct depth.

All bullets are not the same and you must determine the correct seating depth for each make, style and weight of bullet individually. The ogive shape and design will determine where the bullet will contact the rifling and this will vary from bullet to bullet. Some bullets will shoot best with a longer or shorter gap and again the only way to tell for sure is by shooting for groups. Remember, too, that some "hard" bullets like the Barnes X-Bullet require a larger gap to the rifling.

Because rifle throats will vary a great deal, the only way to find the bullet seating depth in relation to the lands is to measure it in the rifle and with the bullet you are going to load. The resulting ammo is not acceptable for any other rifle. If you have more than one firearm chambered for the same cartridge make certain that the ammo is labeled properly and is only fired in the gun it was intended to be used in.

A limiting factor for bullet seating depth can be the length of the rifle's magazine. The bullet must be seated deep enough so that the ammo will feed through the magazine without binding. With some rifles, seating the bullet close to the rifling lands will create a cartridge that is too long to work in the magazine. In that case, if you wish to use the rifle as a repeater you must seat the bullet deep enough to insure reliable functioning in the magazine and hope for the best in accuracy. Or switch to a bullet with a blunter ogive profile.

Cartridges intended for use in guns with tubular

magazines such as many lever actions must have their bullets seated to the cannelure and the case mouth crimped into the groove. This keeps the bullet from sliding further into the case from the pressure of the magazine spring combined with the forces of recoil. This limits the options for seating depth and may result in a longer bullet jump than is optimum for accuracy. That's a point that is probably moot in this style of rifle as they are rarely used in any way that would require the last little bit of accuracy potential be extracted.

Make a careful visual inspection of each cartridge as you wipe them clean with a soft cloth. It's a good idea to check the concentricity. Place the case in a concentricity gauge and spin it while checking for bullet run out or a neck that is out of center with the case. Everything should spin on the same axis center with no wobble.

Place the loaded ammo in a cartridge box and label it with all the load data and the date. Never assume that you will remember the data used and do not rely on notes in your loading manual or log. Label each box with all the important information.

All this simply gets you through the door to the party. Now the fun starts and we get to make some noise. Shoot this ammo carefully from a bench rest to evaluate accuracy. Try moving the powder charge up a little at a time to see if groups tighten or open up. If you are not at maximum, keep going because sometimes they will open up with a change and then close tighter as you move the charge weight higher. Watch the standard deviations on your chronograph to see if they are getting smaller or larger. Smaller is good as smaller standard deviations usually indicate more accurate ammo. But larger, particularly a rapid jump with just a small change in powder charge, might indicate that pressure is at maximum. Sometimes large standard deviations can be reduced by changing primers. Particularly if you go from a standard to a magnum primer. However, reduce your powder charge 5% if you do because the magnum primers will cause a jump in pressure.

Once you have the best powder charge, experiment with bullet seating depth to see if accuracy is improved. Move the bullet in .005-inch increments and shoot to see if accuracy gets better or worse.

If you simply can't make a load shoot, you should probably switch powders or bullets. But always change only one thing at a time. Check the results before moving on to change the next one. This applies to components as well as variations in charge weights or bullet seating depth.

In following these steps you are on a straight road to accurate ammo. It may take a few trips to the range, but range trips are what it's all about. In truth, aren't we really all in this for the shooting?

# The Mystery of Pressure by Bryce M. Towsley

Like any technical pursuit, handloading has its own language. Included in that are a lot of catch phrases that are sure to be strewn through any conversation between one or more devotees. "Pressure" is one term that comes up a lot with people who create their own ammunition. But, it's often misunderstood. We speak of pressure as a bad thing, but without it our bullets wouldn't fly. Pressure is what forces them down the barrel and out into the wide world of free flight. Without pressure they would just continue to sit, fat, happy and content, inside the case neck.

In simple terms, the higher the pressure the harder it will push on the base of the bullet and the faster it will make that bullet go because there is a direct correlation between pressure levels and velocity. Of course, a lot of factors come into play and a 40-grain .22 bullet with the same pressure as a 300-grain .375 bullet is not going to have the same muzzle velocity. But, with all else being equal, on any given bullet the higher the pressure the higher the velocity.

Of course, there are limits. In a modern rifle the cartridge case is probably the limiting factor. They can only withstand so much pressure without failing, so our ammo must be kept below that limit by a reasonable safety margin. In some older designs the gun is the limiting factor. In either case, that "failure" point minus the safety margin is the "maximum" pressure limit for a given cartridge.

Maximum loads are based on the upper pressure limit listed for that specific cartridge by the Sporting Arms and Ammunition Manufacturers' Institute, Inc. (SAAMI.) This regulatory body determines voluntary industry performance standards for pressure and velocity in ammunition for commercial manufacturers.

By looking at a number of factors they determine what the maximum pressure level for a given rifle cartridge should be. Those factors include case design and the type of rifle the cartridge is used in. For example, newly designed cartridges to be used in bolt-action rifles will likely have a higher allowable maximum pressure level than new cartridges designed to be used in a lever action rifle. Primarily because the bolt-action rifle design is stronger than a lever action rifle and can withstand higher pressure.

The age of the cartridge is another big factor. For example, the new rifle cartridges being introduced to the market will only be used in new rifles made with modern materials and manufacturing techniques. The rifles also should be constructed to SAAMI specifications. Because of those factors most of the recent sporting rifle cartridges designed for bolt action and similar rifles are listed with a maximum average pressure of (MAP) 65,000 psi, which is currently the highest SAAMI allows in any cartridge. Examples of these cartridges would include all the new short action magnums, as well as the Remington Ultra Mag family.

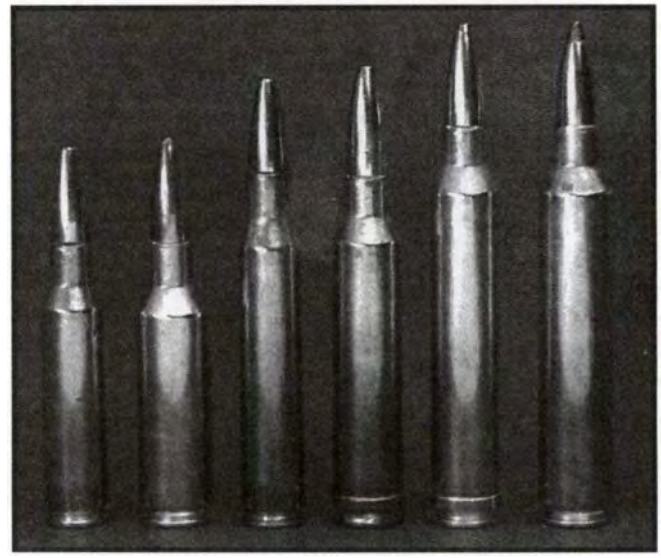

*L to R: 7mm-08 Rem, 7mm Remington Short Action Ultra Mag, 280 Rem, 7mm Rem Mag, 7mm STW & 7mm Ultra Mag.*

However, popular old cartridges like the .45-70 Government will be used in a wide range of rifles from new and very strong guns to old trapdoor Springfield rifles that were never very strong even before age and metal fatigue are considered. As a result, the SAAMI MAP for factory loaded .45-70 ammo is only 28,000 psi.

The rest will fall someplace in between. Cartridges with a lot of old guns of unknown quality around might be low, for example the .300 Savage is listed at 47,000 psi. While at the other end of the spectrum is the .300 Weatherby, which has been around a while, but has always operated at the ragged leading edge of pressure and is commonly chambered in strong firearms. The MAP for the Weatherby is 65,000 psi.

There are basically two laboratory pressure-measuring systems in use to gauge chamber pressure for modern rifle cartridges. The copper crusher system, for which the resulting pressure data is expressed as "copper units of pressure" or CUP. The other is the piezoelectric transducer system. The pressure data from this system is listed in pounds per square inch or PSI. (Unless the information is not available, the pressure references in this article are listed in psi.)

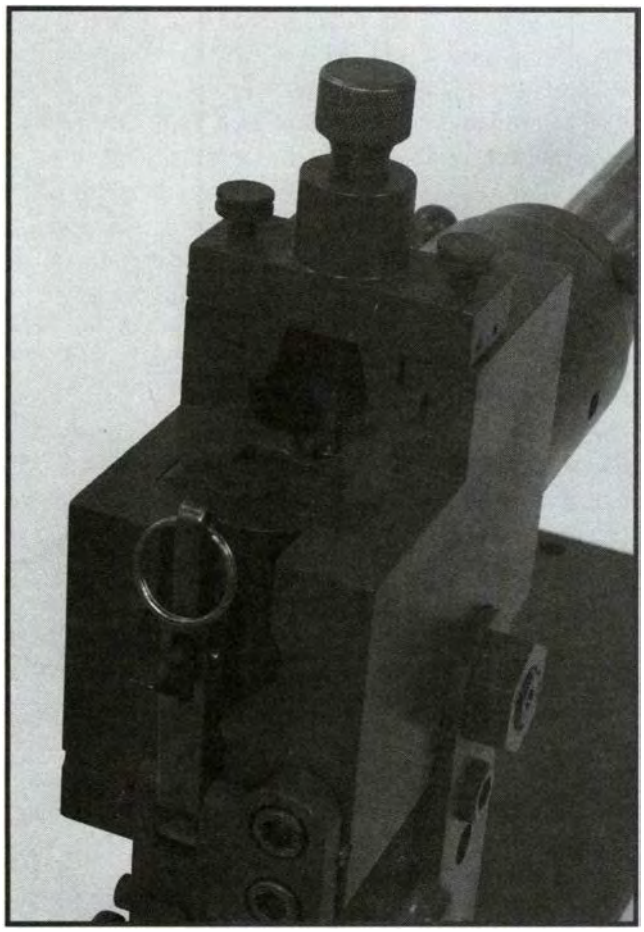

*This is a Universal Receiver shown with a copper crusher resting on the piston.*

Of the two, the copper crusher system is older and is slowly being phased out in favor of the more modern piezoelectric transducer system. However, both are recognized by SAAMI and both continue to see a lot of use.

The two systems result in differing numbers for the same loads and, for mathematical reasons that are beyond the normal range of understanding for anybody not a double carrier of the nerd gene, *there is no direct correlation between the two that would allow a simple mathematical formula to convert from one to the other. So don't even try.*

SAAMI lists the information from both systems for most, but not all cartridges. In general terms the older cartridges are listed for CUP and the newer cartridges listed in terms of PSI, with a lot of overlap that have both listed.

The copper crusher system which measures peak pressure in copper units of pressure uses a special barrel with a cylinder bored perpendicular to the cartridge axis. (Without the gunny "geek speak", that means there is a hole drilled into the side of the chamber.) A piston is inserted into the hole with a copper gas check between it and the cartridge. A copper cylinder is held firmly against the piston. When the gun fires, the pressure in the case will push against the piston which in turn crushes the copper cylinder. The cylinder is then removed and measured to see how much it was crushed. The results are expressed in copper units of pressure.

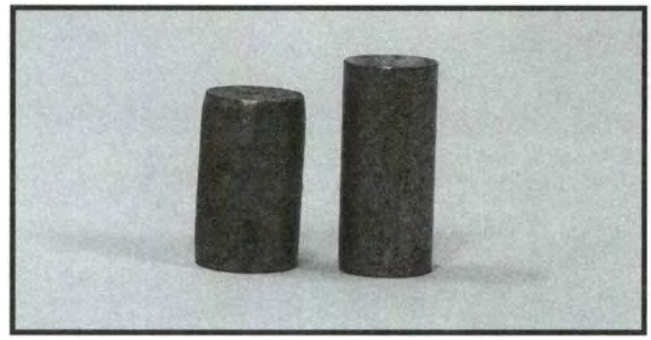

*These are copper crusher cylinders. The one on the left has been compressed from a pressure test. The one on the right is new and shows the original size.*

Each lot of crusher cylinders are of a known metallurgy and are calibrated to a tarage table which is matched with each lot to show the pressure for the amount of crush measured. The operator will remove the crushed cylinder and measure it, then find the corresponding measurement on the chart which will have the pressure listed in CUP on the same line.

A similar measuring device is used for shotshells, but because of the lower pressure levels encountered, it uses lead rather than copper cylinders. The resulting pressure measurement is listed as lead units of pressure (LUP.)

The piezoelectric method uses a transducer sensor mounted in the chamber wall. This contains a piezoelectric crystal that generates a small electrical charge when compressed. The strength of the electrical charge is directly related to the pressure applied to the transducer. This information is automatically fed into a computer which will read the pressure out in pounds per square inch.

Both systems are calibrated using reference ammunition. Reference ammunition is loaded to exacting standards and carefully evaluated for assessed pressure and velocity levels. The reference ammo is fired in the test barrel and the resulting pressure is checked against the reference lot's assessed level. The difference is then used to "zero" the test barrel being used against the known qualities of the reference ammo.

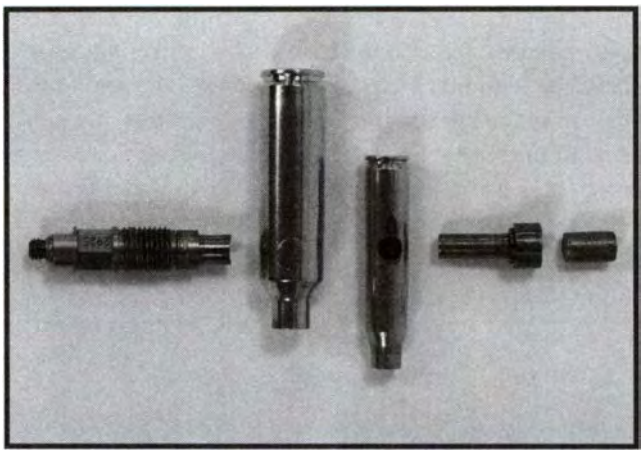

*Cases are shown after pressure testing with the two systems. The transducer on the left leaves a distinct circle imprint on the case, however the case is intact. The copper crusher system on the right depends on the case rupturing and releasing the pressure against the piston and copper crusher cylinder.*

Test barrels are made to very exacting standard set out by SAAMI, but of course no two are exactly the same. The reference ammo allows them to be calibrated to a common dominator.

These test barrels are used to generate the handloading data for this and most other loading manuals. Which, of course, would be fine if we all were shooting our ammo only in SAAMI spec test barrels and under controlled laboratory conditions. But, of course things are different in the "real world." Our guns are usually production quality, made on an assembly line to tolerance specifications that are by necessity much different than test barrels. The chambers and barrels may vary quite a bit in dimension as well as in the design and finish. A barrel that is on the outside of the tolerance level is not going to generate the same pressure levels with the same ammo as a "tight" barrel that is on the small end of the tolerance scale. Also, a rough bore with lots of tool marks is not going to act the same as a smooth, hand lapped barrel. Also, we rarely shoot under the climate controlled conditions of a ballistic laboratory and we may be using the ammo in conditions that range from blistering heat to brutal cold and both have an effect on the internal ballistics.

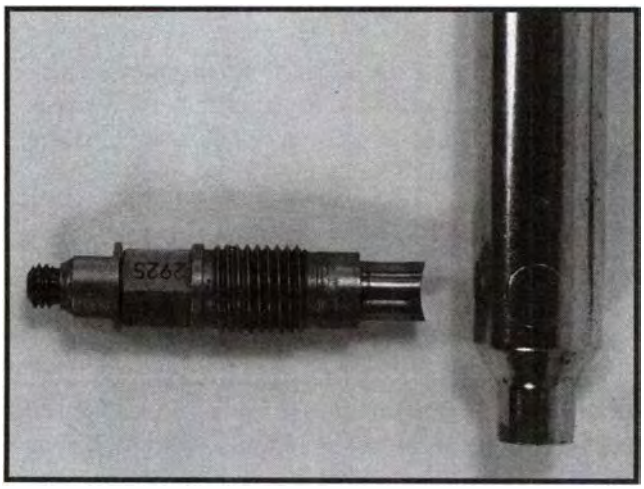

*An imprint is left on cases after pressure testing with a conformal transducer. This occurs as the case forms itself against the face of the transducer, which matches the shape of the chamber wall.*

What that means is that our ammo requirements might be a little different than what the test barrels indicate. It's our responsibility as handloaders to make sure our ammo is safe in our guns. There are some easy ways to do this.

Today's approach is vastly improved from the "wild and woolly" days of shooting when a different philosophy prevailed. I remember about twenty-five years ago when a shooting buddy called a famous old gun writer to ask about his handgun loads. They were well into and beyond the "hot" region of any reasonable loading information, but this was the early years of IHMSA competition when everybody was trying to find the "magic" bullet to knock over the 50-pound rams. Several of us had told my buddy his loads were too extreme, but he liked them because they knocked the targets down. He didn't believe us, so he called this world famous expert. Once he got him on the phone my pal explained in detail what the load was and how it was acting in the gun and what pressure signs he was getting from the fired cases. He had data on how many loads he would get on average out of each case, the average velocity and standard deviation of those loads and a lot of other technical information. The old guy listened patiently until he was done explaining it all in great detail, then asked gruffly, "anything blow up or break yet?"

"No."

"Probably all right then."

A week later the forcing cone of his expensive revolver cracked, as did the forcing cone on his wife's identical gun a week after that.

A better approach than using gun blow-ups and failures to gauge your handloads would be to follow the guidelines in this loading manual. As is prudent, always start with the suggested starting load and work

up until you reach the "maximum" safe pressure level in your gun, or the maximum load listed in the manual, whichever comes first.

But without a pressure barrel and fancy, expensive pressure measuring equipment, work up to what? How do you know when your loads are at the "maximum" safe powder charge? Well, obviously you should never exceed the maximum load listed, but the maximum for some rifles may be well below that. I once had a Ruger Number One rifle chambered for 7 x 57 Mauser that had so tight a barrel that all the loads I tried maxed out well before reaching the top powder charge listed any reloading manual. That was likely the worst example I have encountered, but a lot of rifles I have worked with over the years have started showing signs of excessive pressure before the maximum powder charges listed in the loading manual were reached.

It's also important to know what to look for because you will not always be using the loading manual's recipe exactly as it's listed. You may be using a different brand of case, primer or bullet than what is listed. When you deviate from the recipe listed in the book, things can change. Changing brands of brass can affect chamber pressure because some cases have different internal capacity, which at maximum load pressures can be enough to get you into trouble.

Bullets are not all created equal and they can have a big effect on chamber pressure. Don't assume that just because the book lists a 180-grain bullet that any 180-grain bullet is fine. The length of bearing surface of the bullet will have an effect on the pressure because it causes friction and that friction will vary with how much of the bullet is contacting the barrel. Also the hardness of the bullet can affect chamber pressure. A "hard" bullet like the solid copper Barnes X-Bullet can cause pressures to rise because it is more resistant to shaping itself to the contours of the rifle's bore. Also, because copper is less dense than lead, a bullet of a given weight will be longer when it uses more copper or gilding metal. Or, if the core is lead alloy rather than pure lead, it will require a bit more length to achieve the same weight because alloy is less dense than lead. The longer bullets have a greater bearing surface as a rule, which means more friction. This is true of X-Bullets, Winchester Fail Safe, Trophy Bonded and many other premium hunting bullets. These hard bullets can also be sensitive to bore diameter and rifling style and cause higher pressures than expected if the bore is on the tight side of tolerances. But, don't assume any rule of thumb to be true, especially this one. Sometimes the "hard" bullet shows lower pressure than expected and a "soft" bullet will cause higher pressure than you thought it would. A soft bullet with a thin jacket and soft lead core may cause higher pressures because the bullet is so malleable that the sides will push hard against the bore of the rifle when high pressure is exerted on its base. Even the bullet's jacket material, copper or gilding metal can change pressure. So, the rule is simply this, assume nothing. If you deviate from the known load or change any component, back off the powder charge weight by 15% and work up again to the maximum safe level.

*Winchester Fail Safe .30 bullets. L to R: 180 grain .30-06 recovered from a bear. 180 grain unfired. 165 grain fired at 3,000 fps into blocks of ballistic gelatin with a large elk leg bone molded in. Sectioned 165 grain.*

Anytime you change something in your load, the pressure can change. Something as small as a primer change can send the pressure over the safe limit. This is particularly true if you switch from a standard primer to a magnum primer. Even shortening the gap from the bullet to the rifling by altering the seating depth can change pressure levels. Always back off until you see what the results of the change are.

There are several signs of excessive pressure to look for and these tried and true methods have worked for generations of handloaders. Several of the older loading manuals were actually compiled using these methods. The amazing thing is that when the industry started using carefully controlled pressure barrels and scientific measuring devices, it was discovered that most of the old data was correct. That was due mostly to the skill of the technicians who developed the load data.

Perhaps the best method is to measure the case head expansion. The solid brass in the head of the case will expand a small amount with each firing. This will vary with the thickness of the brass, the composition of the metal and the pressure encountered. However, it is

generally accepted that most brass will expand about .0005-inch with a pressure of about 50,000 CUP, or 60,000 psi which is the max listed for the .30-06 Springfield and .280 Remington.

It's best to use once fired brass, as the first firing usually will give a larger reading. After two firings the brass may start to work harden and skew the results. But by using once fired brass you have established a constant. The down side is you must have a blade micrometer that is capable of reading to one ten thousandths of an inch. You must measure the solid web between the case body and the extractor groove and the anvils of a standard micrometer will not fit, so you need a blade mic with thinner anvils. A caliper is not accurate enough, even if it reads to one ten thousandths. So a blade micrometer is the only answer. Always measure at exactly the same location, using a point on the headstamp as a reference. When you reach .0003 to .0005-inch expansion over the once fired diameter, you are probably approaching the maximum load. Again, this is for calibers operating at approximately 60,000 psi.

Most reloaders know about "reading the primer," but that's not always an accurate measurement of pressure. A lot of things can have an affect on the primer condition in a fired case, including the condition of the gun and the firing pin. Also, how a primer reacts to pressure will vary by brand and style. A pressure level that causes changes in one brand of primer that indicate excessively high pressure may appear fine with another brand of primer. You simply cannot look at the primer of a fired case and know what is happening in terms of pressure.

That's not to say that "reading" a primer is not useful, it is, but you must do it correctly. If you are constantly monitoring the primer condition from the starting loads on up, using the same primers, as you increase powder charge weight you will be able to see changes in the primer condition that might be indications of pressure levels that are approaching maximum. From the early loads you will know what the primer looks like with mild loads and as you increase the charge weight watch carefully for any changes in that appearance. If the primer is losing its radius along the rounded top edge and starting to fill the gap to the top edge of the primer pocket you are at or near maximum pressure.

Bear in mind that primers can also flatten for other reasons. For example, if the headspace is a bit long in that rifle it can cause the primer to flatten. What happens is the firing pin will push the cartridge forward until it fires. The primer can then back out of the case and into the space between the case and the bolt face. As the pressure builds, the head of the case will move back against the bolt and the extruded primer may flatten out to fill the primer pocket. Pressure might well still be within safe limits, but the uninformed will look at the flat primer and assume that the load is too hot. That's one reason why it's important to watch the primers with starting loads that you know are low pressure (relatively speaking) and see how the primer reacts as the powder charge is increased. If it flattens with the mild load, you probably have other problems with the gun. But if the primer appearance follows a predictable pattern as you increase the powder charges until it starts to show signs of high pressure, then you can use it as one indicator of when your loads are approaching maximum.

Primer cratering can occur from a weak firing pin spring or a firing pin that fits poorly in the bolt. But, it can also indicate that pressures are getting too high. If your mild starting loads also showed cratering, then chances are it's a gun problem. But if the cratering suddenly started appearing when the charge weights were increased, especially if other signs of excessive pressure are also appearing, then pay attention, you are getting into dangerous territory.

Watch for sudden changes in the primer condition and for erratic primer appearance that is different from the rest of that lot of ammo. For example, if the first five shots are showing a slight loss of the radius, but suddenly the fifth shot has a primer that is flat and extruded to fill the entire primer pocket, you probably had a spike in pressure with that load. It also indicates that the powder charge is too hot in general, you should back off a little.

Keep a close eye out for black smudges between the primer and the case that indicates gas leaking. This is a sign to back off on the powder charge. Of course any loose primer is an indication that the load is way too hot and a clear danger sign. Note how the primers seat as you reload the case. If they seat easily with little pressure the primer pocket is probably stretching and the load is too hot. The general rule of thumb with high intensity rifle cartridges is if on the third load the primer pocket is still tight, the load is likely safe. Cases with loose primer pockets should be discarded.

Watch the case head condition. If a shiny spot on the head appears, the case brass is likely extruding into the

ejector cut on the bolt and is "shaved" off as the bolt rotates to open. That load is far too hot.

Watch for signs of sticky extraction. A sticky bolt is often the first sign of excessive pressure. If the bolt opens hard or the case balks at exiting the chamber, the load is too hot. If you have to beat the bolt open with a mallet, it's way too hot!

Often lever action rifles and other rifles with rear locking actions and bottleneck cartridges may start to show stretching in the case ahead of the web. This will show up as a shiny ring around the outside of the fired case just ahead of the solid head. It can also be checked by bending the end of a straightened paper clip to 90 degrees. Insert this to the bottom of the case and scrape the sharp edge of the end along the inside wall of the case. If the paper clip hesitates or catches just up from the bottom of the case it indicates a thin spot caused by case stretch. That case will probably separate on the next firing, which is not only dangerous, but will render the gun useless until the front section of the case is extracted from the chamber.

Every serious handloader should have a chronograph. They are relatively inexpensive and without one you are just throwing bullets downrange with no idea what they are really doing. Until I got my first one I had used the same .30-06 load for years, smug in my ignorance that it was all the book said it would be. I thought my new chronograph must have been broken because the load showed a muzzle velocity that was several hundred ft/s lower than I expected. I had worked the load up carefully and knew it was at the safe limit for this gun. Several other guns were hitting the velocity expected and when I checked that .30-06 with some factory loads they were close to the velocity expected, so the problem was with my handloads, not the chronograph. The problem was corrected by changing powder and the bullets were soon zipping out the barrel at the speed I had anticipated. As an added benefit, the new load was more accurate than the slower load. Without the chronograph I would have continued to use that underachieving load without a clue to how poor it really was. But, that's only one of many reasons that you should own a chronograph.

A chronograph can also help to identify when you are approaching the maximum load. Of course, if you are hitting your target velocity then chances are you are at the maximum powder charge. But, another good indicator is the standard deviation of your handloads. If you have been getting consistent readings (particularly if they have been low) and a small increase in the powder charge causes the standard deviation to spike up, you have exceed the maximum charge.

Remember that powders react differently as pressure changes and they can become erratic at higher pressure. A one-grain change in the powder charge does not always result in the same percentage of change in pressure. Often a small increase can cause pressure to spike up dramatically.

When you see any of these pressure signs start to appear, back off about 5% on the powder charge. If the pressure signs recede, your load is likely the maximum for your rifle, even if it's still below the maximum powder charge listed in the manual. If the velocity is lower than what is indicated for that cartridge and bullet weight you can consider going to the next slower burning powder and working up again. But, be reasonable in your demands. Just because the book shows 3,000 ft/s and your load is only getting 2,950 ft/s; like the song said, "don't worry - be happy." There are a lot of variables in this game and sometimes they just don't favor you; besides 50 ft/s or even 100 ft/s is not a significant difference. Also, don't forget to allow for differences in barrel length. Most test barrels are 24-inch, while your rifle may be 22-inches and velocity will be lower.

Remember, pressure is a shooter's friend. It's what causes the bullet to propel down the barrel and out into this big, wide, world. Pressure is a necessary thing and within certain limits the higher the pressure the higher the velocity will be, but recognize that there are limits. Learn to accept pressure, but always fear it a little bit too. Like fire, it's only your friend if you understand it, respect it, and never try to cheat on its rules.

# 12 The Flight of a Bullet by Bryce M. Towsley

It all changed the day that one of our hairy-legged ancestors picked up a rock and instead of bashing his four-legged lunch fixins' in the head up close and dangerously personal, threw the rock to accomplish the same result from a safer distance. Since then, man has been trying to perfect the flight of deadly projectiles.

The path of today's modern hunting rifle bullet is invisible and a mystery to most hunters. Yet it is an incredible feat when an accurate rifle is able to fire bullets with consistency enough that they can travel through the mass of assorted gasses we call air and strike in a predictable location, often a very long distance from the shooter.

We have progressed a great deal from guns of the 1300s that fired almost anything that was handy, including rocks or gravel. Those primitive arms were charged with black powder that was often of an un quality and power. One reference says that the advice was to fill the bore "three-fifths full with powder before inserting a wad and bullet." The reasoning was that even with weak powder it would be enough but, with luck, not so much as to blow up the gun if it turned out to be "strong" powder.

Those crude hand-held guns then were fired by inserting a glowing wire into a touchhole at the breech end or by using a hot coal to light a small pile of powder on top of the touchhole. (Talk about long "lock time!") Of course, to do this the shooter must watch the ignition device, so sights were rather frivolous.

These guns were deemed the "Devil's Invention" by some clergy and were often outlawed for battle. (The crossbow met with a similar designation when Pope Innocent II forbade their use in 1139. He said they were "deathly and hateful to God and unfit to be used among Christians." However, he noted that he didn't have a problem with skewering non-Christians with a long bow.)

At any rate, from these humble beginnings have evolved today's rifles. We now have rifles capable of firing projectiles to 4,000 ft/s with accuracy that will keep all the bullets in less than one inch at two hundred yards or more. The technology that has made this possible has come from our understanding of how bullets react during their flight. The witchery of it all remains, though, that during this flight they are out of our direct control and at the mercy of physics and fate.

That alone is enough to still keep it interesting. It is an amazing thing to observe the modern hunter and his priorities are at times puzzling. Any seminar from a well-known whitetail guru will pack the house. Let any "expert", real or pretender, expound on the latest way to hunt a scrape line, place a tree stand or blow a grunt call and the adoring fans will fall at his feet. But, if the biggest expert in the field gave an outdoor show seminar on today's rifle bullets and ballistics, they likely wouldn't need much in the way of crowd control.

That's a little troubling because the bullet is the one physical connection with the game the hunter is pursuing. The bullet is the sole determiner of the outcome of any hunt, as you touch a live animal with nothing else. Yet, the rifle bullet and its flight remains the wallflower of the dance, sitting in a corner while everybody is caught up with the glamour and paying it no attention.

The bottom line is - everything you do on any hunt, all the expense, the time, the sweat and the tears, all comes down to one thing; the bullet. If it does its job you are happy and it's forgotten. If it does not, you have nobody but yourself to blame.

*Plastic tipped bullets for big game. L to R: Nosler Ballistic Tip, Swift Scirocco, Hornady SST*

The bullet is truly the unsung hero of the modern big game rifle hunter. The demands placed on it are incredible. An engineering student not aware of today's bullets and given an assignment to design one, would likely change his major to modern dance rather than accept. We expect our bullets to be accurate enough in flight to allow us to hit very small targets at very long ranges. Then we demand that they work correctly over a range of impact velocity and target variations that would be deemed unreasonable by any objective outside observer. Yet they do it so well these days that most hunters virtually ignore the specifics.

When smokeless powder made velocities of 2,000 ft/s and higher possible around the turn of the century, bullet makers cringed. But they rose to the call and jacketed bullets arrived on the scene. Then a few years later, as technology allowed higher and higher velocities and brought the bullet's speed up past 3,000 ft/s with regularity, they changed bullet designs to keep up. These higher velocities coupled with a parallel trend in the development of optical sights and hunters started demanding long-range accuracy, flatter trajectories and predictable terminal performance over a wider range of impact speeds.

In recent years we have seen a revolution of hunting bullets designed to accommodate the American hunter's insatiable appetite for more velocity. Even now, as big game rifle velocities approach the next plateau of 4,000 ft/s, today's super bullets can handle impact velocity ranges that designers dared not even dream about a generation back. These bullets remain stable and accurate at these high velocities and they have designs and shapes that cut through the air slicker than a politician at a fundraiser.

*The Swift Scirocco bullets.*

Has it reached a pinnacle? Is this the limit? Some thought it was with each of the milestones of the past, and they were wrong. To think today's advances have taken bullet design as far as it can possibly go would be fool's thinking. There is always one more hill to climb, one more frontier to conquer and one more problem to solve. As long as we are free to own and shoot rifles and as long as those rifles continue to use bullets as projectiles, we will continue to witness both subtle and amazing technological advances in their design.

And we as hunters will continue to all but ignore the bullets we shoot, demanding perfection and expecting and receiving nothing less.

The three common types of ballistics often referred to by shooters can be a little confusing. But, it's really very simple. *Internal Ballistics* is what happens inside the gun. It refers to the powder burning, pressure, the bullet's path down the barrel, etc. *External Ballistics* is what happens during the bullet's flight through the air. It deals with trajectory, velocity, energy, etc. Finally, *Terminal Ballistics* is what happens after the bullet has hit the target. It's the study of such things as expansion, weight retention, penetration, etc. Internal Ballistics is covered in another article, so we will deal here with the last two; what occurs after the bullet leaves the rifle's barrel.

But first, let's look at the barrel and what it does. It's been long known that by imparting a spin on a projectile it will become more stable in flight and the rifling in a barrel is designed to make the bullet spin at a predetermined rate. Just exactly how the concept of rifling in a gun's bore was developed is a bit unclear, but it's thought that archers who attached feathers to their arrows noticed that the curved wing feathers caused the arrow to spin in flight and made them more accurate.

Rifling in guns can be traced to the 15th century. Some say it was Gaspard Kollner, a Vienna gun maker, who first put spiral groves in musket barrels. Others claim that his rifling was straight and that it was Augustus Kotter of Nuremberg who first used spiral rifling in 1520. Another text says that the earliest known rifled gun was a matchlock owned by Emperor Maximillian in 1500. Regardless of the exact date when rifling was first used to spin a bullet in flight, it remained a seldom-used concept for centuries. Rifled barrels were simply too difficult and expensive to make and only the mega-wealthy could afford such a luxury.

Nobody back then knew exactly how rifling worked to make a gun more accurate, but the popular theory was that spinning the bullet kept the Devil from riding it and steering it away from its intended target. Today we know that spinning a bullet stabilizes it with a gyroscopic effect. The gyroscopic effect causes a spinning object to resist a change in direction and that's the real reason the Devil can't steer the spinning bullet away from the target.

This is the same effect that keeps a child's top stand-

ing upright as long as it's spinning. A bullet spinning on its axis will resist outside forces that might cause a non-rotating projectile to veer off course. This also minimizes the influences of different densities within the bullet and the slight irregularities on the surface that change air friction. Without the spinning induced by rifling, these may eventually cause the bullet to veer off course. But with it spinning, they are in constant motion and so their influence on the bullet's course is minimized. When combined with the much more powerful gyroscopic effect, it will result in a more accurate projectile.

Rifling is simply a series of parallel "ridges" that spiral within the bore of the rifle barrel. These ridges are called "lands" and the valleys in between them are called the "grooves." The distance between the opposing lands is the bore diameter. The distance between opposing grooves is the groove diameter, which can vary depending on the depth of the rifling grooves in the barrel.

The amount of spin is dependent on the rate of twist the rifling has. This twist rate is expressed in the number of inches of forward travel needed to complete one rotation. For example a bullet traveling down a barrel with a 1:10 twist rate will make one complete rotation in ten inches of forward movement. The general rule of thumb is that a longer bullet in relation to its diameter will require a faster rate of twist than a shorter bullet. Also, a more pointed bullet will need a faster twist than a blunt bullet (because it's longer.) Finally, velocity can affect the rate of twist needed to stabilize a bullet. A given bullet will stabilize with a slower twist rate if the velocity is higher.

While the barrel propels the bullet and adds spin to it, once it leaves the muzzle it's on its own. The laws of gravity have not yet been "interpreted" by the federal courts, so they still dictate that a bullet will begin to drop toward the earth from the moment it leaves the rifle barrel.

The reason that some rifles shoot "flatter" than others is simply because that bullet is traveling faster and is able to cover more distance in a given amount of time. The bullet is still dropping to the earth at a rate of acceleration of 32 feet per second, but it simply covers more ground than a slower bullet before dropping a given distance.

Because the bullet begins dropping as soon as it is free from the constraints of the rifle, if it were simply fired with the bore of the rifle pointed at the target, it would hit below the target every time. It is necessary to elevate the rifle's bore slightly above the line of sight so that the bullet's path rises on a curve that has it crossing the line of sight twice.

The line of sight is a straight line from the sights and to the target. Vision is not subject to gravity so your eye and the bullet take different paths to the target. While your eye's path is as straight as a laser, the bullet's path will be an arch to compensate for the effects of gravity.

The first time the bullet crosses your line of sight will be close to the rifle. The exact distance will depend on several factors such as how high the sights or scope are above the bore, the distance to your zeroed point of impact and the relative flatness of the trajectory for your bullet. However, it is usually somewhere around 25 to 50 yards. The next time the bullet crosses your line of sight will be at the distance you have selected to zero your rifle for. At any point in the bullet's path other than these two, the bullet will always be above or below your line of sight.

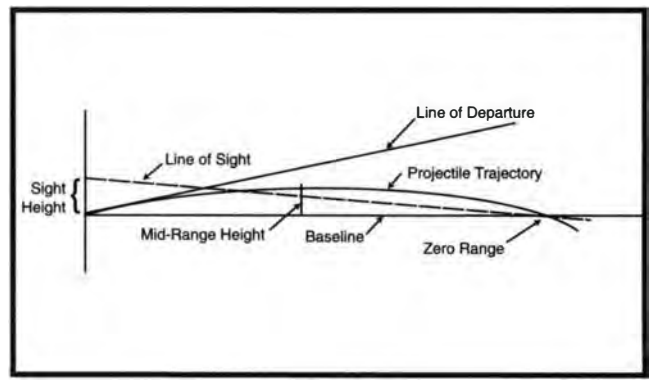


Because a slower bullet takes longer to get to a given distant point, it must arch higher above the line of sight than a bullet that is traveling much faster. Let's take an extreme example and compare the .45-70 and the .300 Remington Ultra Mag, both sighted for 200 yard zero.

The mid-range trajectory is the apex of the bullet's arch or the highest point that the bullet will be above the line of sight during its flight. With the .300 Remington Ultra Mag and a 200 yard zero, the mid-range trajectory of the bullet occurs at about 120 yards and is only 1.17 inches. The mid-range trajectory for a .45-70 with a 400-grain bullet and a 200 yard zero is 13.37 inches and occurs at 110 yards.

Total bullet drop at 200 yards for the .300 Remington

Ultra Mag is 6.99 inches. That is, if the bullet were fired perfectly level it would have dropped 6.99 inches by the time it reached the 200-yard mark. Total 200-yard drop for the .45-70 is 51.23 inches.

The difference is that the .300 Remington Ultra Mag has a muzzle velocity of 3,300 ft/s and uses a streamlined bullet. It takes it only .19467 seconds in flight to reach 200 yards and the bullet is still traveling at 2,881 ft/s at that distance. The .45-70 uses a bullet that is much less streamlined so it loses velocity much quicker and it starts out at a much slower 1,300 ft/s. The .45-70 bullet crosses the 200-yard mark with a time in flight of .53846 seconds and with 991 ft/s velocity remaining.

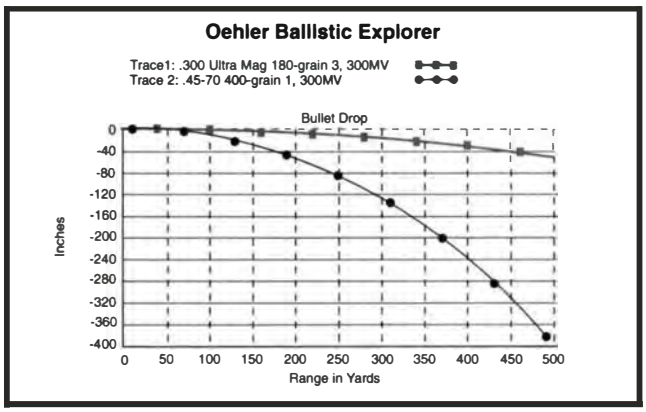


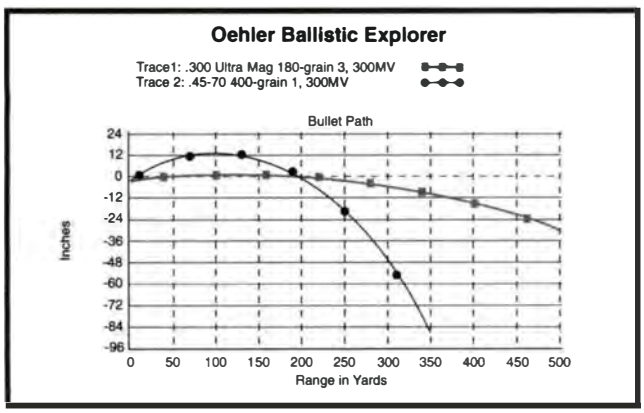


*Graphs Courtsey of Oehler Research Inc.*

Of course, the .300 Ultra Mag is much faster to start out than the .45-70, but notice too that it retains a higher percentage of its velocity down range, 87% vs. 76%. That is because of bullet design. The ability of a bullet to retain its velocity is expressed as the ballistic coefficient. This is a measure of how aerodynamic a bullet is and how well it cuts through the air. The technical explanation is "the ratio of the sectional density of a bullet to its coefficient of form." The higher the number, the less the bullet is slowed by air resistance over a given distance at a given velocity. That means a higher BC bullet retains its velocity better than a low BC bullet. This results in flatter trajectories and increased down range energy retention. Sectional density is a measure of a bullet's mass relative to its cross-section. In simple terms, a relationship of its weight to its diameter. The SD of a bullet is found by taking the bullet's weight in pounds and dividing it by the square of its diameter in inches. The higher the SD of a bullet in a given diameter, the heavier and longer that bullet will be. This is important to several factors, including the BC of the bullet. However, from a big game hunter's standpoint the most relevant measure of SD is that with all else being equal, the higher the SD of a bullet, the better its ability to penetrate.

There are several factors that affect the BC of a bullet, but shape is the one that is most easily identified. A pointed bullet will have a higher BC than a flat-nose or round-nose bullet of the same diameter and weight, simply because it offers less wind resistance. In this case the .300 Ultra Mag's bullet has a BC of .474 while the .45-70 bullet's BC is .214.

Simply put, any bullet must arch in its path to the target relative to the line of sight. The faster the bullet gets to the target, the flatter that arch or trajectory will be. Also, the further from the gun that the sights are adjusted to zero the point of impact the higher the arch will be. If the gun is zeroed for 300 yards the apex of the arch will be higher above the line of sight than it will be if the gun is zeroed for 100 yards with the same load.

Also, with a slower velocity and lower ballistic coefficient, the amount of drop at any point beyond the zeroed range will be greater. At three hundred yards the .300 Ultra Mag will impact 5.27 inches below the line of sight while the .45-70 will impact 48.07 inches below the line of sight.

Even when we compare apples to apples and use bullets of the same weight and fired from the same gun the long range benefits of a bullet with a higher BC are still apparent. Comparing identical loads made with both round nose and pointed bullets shows the impact that BC has down range. Let's compare 180-grain .30-06 factory loads - one pointed, the other round nose. The following charts show the differences between the two designs.

| Pointed Bullet | Muzzle | 100 yards | 200 yards | 300 yards | 400 yards | 500 yards |
|---|---|---|---|---|---|---|
| Velocity ft/s | 2,700 | 2,469 | 2,250 | 2,042 | 1,846 | 1,663 |
| Energy ft.-lbs. | 2,913 | 2,436 | 2,023 | 1,666 | 1,362 | 1,105 |
| Bullet Path in inches | -1.5 | +2.1 | zero | -9.0 | -26.3 | -54.0 |

| Round Nose Bullet | Muzzle | 100 yards | 200 yards | 300 yards | 400 yards | 500 yards |
|---|---|---|---|---|---|---|
| Velocity ft/s | 2,700 | 2,348 | 2,023 | 1,727 | 1,466 | 1,215 |
| Energy ft.-lbs. | 2,913 | 2,203 | 1,635 | 1,192 | 859 | 625 |
| Bullet Path in inches | -1.5 | +2.4 | zero | -11.0 | -33.8 | -72.8 |

Another confusing aspect of shooting is what happens to the bullet's path when the shot is fired at a sharp uphill or downhill angle.

I think I have heard every theory on earth, but the most common is that when you are shooting downhill the bullet will strike higher and when you are shooting uphill the bullet will strike lower. Technically, both are wrong.

Gravity doesn't care if the bullet is flying up or down; it works its magic on it in exactly the same way. That is, if we disregard air friction, it pulls the bullet toward the center of the earth at a rate of acceleration of 32 ft/s. This is what causes a trajectory curve in every bullet fired. If we could fire a bullet in space where there is no gravity then it would not drop a bit, but here on earth gravity is a fact of life. Gravity pulls on the bullet as it travels in relation to the center of the gravitational force, or the center of the earth. The longer gravity has to work on the bullet, the faster it will drop. A bullet that is fifty yards from the muzzle is dropping much more slowly than a bullet that is 300 yards from the muzzle. This is because the 300-yard bullet has had more time for gravity to act on it. That's one reason why trajectories curve much more sharply down as the distance progresses.

In theory, a bullet that is fired from a perfectly level rifle barrel will strike the earth at the same time as a bullet that is dropped from the end of the barrel at precisely the same time the fired bullet exits the muzzle. The difference is that one bullet will hit the ground near the rifle while the other uses the time to fly through the air and will strike the earth at some distant point.

No bullet can actually go up in defiance of the law of gravity and they all begin dropping toward the earth as soon as they exit the muzzle. The distance a bullet travels in relation to the earth's center, or gravitational pull, from the muzzle to the target is what determines how far a bullet will drop in a given time span. With a steep up or down angle, the distance to the target will be longer than the distance the bullet travels in relation to the earth's center. Rather than dropping the amount we expect for the distance traveled to the target, the bullet actually will drop for the distance it travels in relation to the earth's center. The steeper the angle, the shorter that distance becomes.

For example, let's assume that you are shooting at a sheep that is 400 actual yards away, but on a very steep angle. The gun is a 7mm Remington Magnum with a 140-grain bullet and sighted for a 200 yard zero. You will expect the bullet to impact eighteen inches below the line of sight for a 400-yard shot. However, the path of the bullet's flight in relation to the earth's center or the center of gravitational pull is in reality 300 yards, so the bullet is only 6 inches below the line of sight when it gets to the sheep. If you hold for 400 yards, it will result in shooting over the ram you just paid $15,000 to hunt.

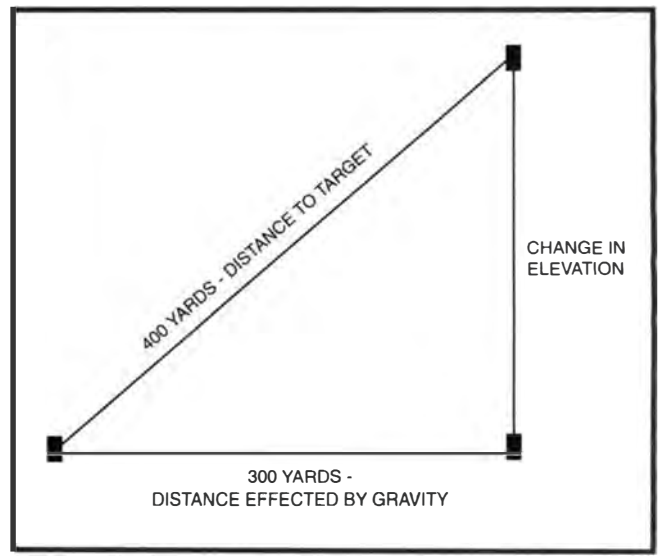

Of course, as the distance shortens this becomes less of a factor because the bullet is moving faster and has had less time in flight for gravity to act. The result is that, due to the shorter range, the bullet has dropped less and the trajectory curve is much flatter. Obviously, the flatter the rifle shoots the less the difference will be. With a flat shooting modern rifle and a sight-in that keeps the bullet within three inches of the line of sight out to a given distance; if the target is less than that distance from you, the bullet will always strike within three inches of your point of aim, regardless of the angle. Which should not cause you to miss a big game animal.

The problem comes in when you cannot close the distance and must take a long shot, compounded by an angle that's steep. Suppose the angle is very steep and the distance to the sheep is 300 yards, while the distance in relation to gravitational pull is 200 yards. With that same 7mm rifle you will be expecting the bullet to drop 6 inches from the line of sight for a 300 yard shot, when in reality it will hit right where the crosshairs are centered because the rifle is zeroed at 200 yards, which is the actual bullet travel in relation to gravitational pull. With luck, if you held for a six-inch bullet drop you might spine the sheep instead of shooting over his back.

| Angle degrees | Bullet path in inches below line of sight at 400 yards | Variance in inches in the bullet path from level |
|---|---|---|
| Level | -23.14 | NA |
| 10 Degrees | -22.47 | .67 |
| 20 Degrees | -20.46 | 2.68 |
| 30 Degrees | -17.16 | 5.98 |
| 40 Degrees | -12.69 | 10.45 |
| 50 Degrees | -7.20 | 15.94 |
| 60 Degrees | -0.81 | 22.33 |

*Difference in bullet path with varying angles.*
*.30-06 Springfield 165 grain Speer Spitzer*
*MV 2,800 ft/s - Zero range 200 yards.*
*Target distance - 400 yards.*

The effect of wind on a bullet's flight has been a subject of heated discourse for as long as shooters have been trying to hit targets at long distances. We have developed charts and computer programs in attempts to make predictions, but at best they are only a guideline. All the mathematical theorists from Einstein to my cousin Philip can't predict exactly what a bullet will do when it is fired through a real-world moving air mass.

However, the computer programs and ballistic tables are useful in learning about the wind's effects and it is hardly a waste of time to study them. For example, the accompanying table will give you some idea of the difference of wind direction on a bullet's path. It will also help to illustrate the degree of wind deflection on differing bullets and velocities. But the flaw in these tables and programs is that the predictions are built on laboratory conditions and assume a constant force and direction of wind.

Things are different in the atmosphere we shoot through. Winds gust and wane with currents and flows affected by terrain, vegetation and a million other factors. While it may be blowing one speed where you are, your bullet can travel through wind that is moving several different speeds before it reaches a distant target. The same with wind direction; over a given distance it can curl around, double back, eddy, switch and change its attitude more times than a six year old with a sugar buzz. If there is one constant in a wind's influence on a bullet it is the inconsistency.

The effect as predicted in the charts and computer programs uses the velocity and ballistic coefficient of the bullet to determine the time of flight, which is in effect the amount of time the wind has to act on the bullet. The more time in flight, the more the wind will blow it off course. Other factors include the bullet's size and shape or the amount of area available for the wind to blow against. Also the bullet's weight, as it is easier to push around a light object than it is a heavy one. Who would you rather wrestle, Hulk Hogan or Bill Gates? Same principle.

| Cartridge | Drop & drift with 20 mph wind from 06:00 o'clock | Drop & drift with 20 mph wind from 03:00 o'clock | Drop & drift with 20 mph wind from 12:00 o'clock |
|---|---|---|---|
| **.44 Rem. Mag. 240 gr.** 1,200 ft/s | | | |
| 100 yds | 13.55/00 | 13.73/8.54 | 13.93/00 |
| 200 yds | 59.52/00 | 60.96/31.07 | 62.51/00 |
| 300 yds | 145/00 | 149.7/65.17 | 154.8/00 |
| 400 yds | 276.9/00 | 287.8/110.2 | 299.9/00 |
| 500 yds | 462.7/00 | 483.8/166.4 | 507.6/00 |
| **.220 Swift 55 gr.** 3,900 ft/s | | | |
| 100 yds | 1.24/00 | 1.24/1.68 | 1.24/00 |
| 200 yds | 5.38/00 | 5.39/7.05 | 5.41/00 |
| 300 yds | 13.21/00 | 13.26/16.69 | 13.32/00 |
| 400 yds | 25.77/00 | 25.93/31.39 | 26.09/00 |
| 500 yds | 44.50/00 | 44.88/52.21 | 45.27/00 |
| **.30-06 Springfield 180 gr.** 2,520 ft/s | | | |
| 100 yds | 2.87/00 | 2.87/1.59 | 2.88/00 |
| 200 yds | 12.09/00 | 12.11/6.58 | 12.14/00 |
| 300 yds | 28.68/00 | 28.77/15.40 | 28.86/00 |
| 400 yds | 53.87/00 | 54.12/28.48 | 54.37/00 |
| 500 yds | 89.19/00 | 89.73/46.34 | 90.30/00 |
| **12 ga. sabot slug 437.5 gr.** 1,350 ft/s | | | |
| 100 yds | 12.13/00 | 12.37/15.56 | 12.62/00 |
| 200 yds | 57.51/00 | 59.55/54.88 | 61.78/00 |
| 300 yds | 148.1/00 | 155.2/113.6 | 163/00 |
| 400 yds | 297.2/00 | 314.7/192.3 | 334.6/00 |
| 500 yds | 521.1/00 | 558/293.2 | 601.3/00 |

Wind direction is another factor. A ninety-degree side wind will blow against the full profile of the bullet, but any angle that is different will have a differing percentage of the bullet's surface to act on. A full head or tail wind will have either the point or the base of the bullet to blow against, which affects retained velocity and consequently bullet drop. For example, a .44 Magnum 240-grain bullet with a 20 mph tail wind will have almost 100 ft/s more retained velocity at 500 yards than the same bullet with a 20 mph head wind. This will change the bullet path even though there is no theoretical wind deflection and the difference in drop is almost 45 inches. Of course this is an extreme example and nobody really considers the .44 Magnum a 500-yard cartridge, but every bullet from any cartridge will be affected in some way.

Now suppose the wind is gusting from a 45 degree angle, or 20 degrees or perhaps ten degrees. Maybe it will be from all three before the bullet makes it from your gun to the target. How much will that affect the lateral wind deflection? How about the bullet drop?

I don't have a clue.

Neither does anybody else, not with all the variables.

Shooting in the wind is far more an art than a science and the only real way to learn about reading the wind is to get out and shoot in it. A couple of days in a prairie dog town will teach you more than all the theoretical computer programs or printed ballistic tables in the world. If there is a pronounced lack of prairie dogs

where you are, simply find a windy place with some good distance and shoot at clay pigeons, plastic soda bottles full of water or even paper targets and do it with a variety of firearms. Have a pal watch your hits through a spotting scope and try to evaluate each shot. After a few thousand rounds or so you may finally start to get a handle on how to shoot in the wind.

The greatest debate on bullets these days might well be in the terminal ballistics, what happens after the bullet hits the game. With varmints or targets it's pretty well a non-issue, but with big game things change. There is a popular theory that a bullet should stay in a big game animal's body, "dumping all its energy." It is being promoted by several gun writers and unfortunately many hunters are accepting it as gospel.

Personally, I find it irresponsible.

A .22 LR will always stay in a deer, dumping all its energy and often resulting in the termination of the deer. Does that make it a deer caliber? Of course not.

When applied with a modern rifle caliber this theory can produce some spectacular results, but those hunters who persist in using it as a guide for choosing their bullets and cartridges are courting disaster. There are far too many variables such as impact velocity, bullet path, game size, material penetrated, physiological variables in the target animal and many more for this to ever work.

Consider that a .220 Swift with a 40-grain bullet at 4,100 ft/s generates 1,493 ft-lbs of energy, far more than any generally accepted 1,000 ft-lbs minimum for whitetail deer. If you place that bullet precisely in the lungs the deer will likely drop as if hit by lightning. Move the impact a few inches forward to the shoulder and he may run off. If he is lucky, the coyotes will find him soon and end his suffering. Both shots dumped all their energy into the deer's body, so what happened?

You must remember that death is not a result of energy transfer, but of tissue destruction. Dumping energy is useless if it does not result in damage to vital tissue. The bullet that hit the shoulder likely fragmented and failed to penetrate through anything important.

*L to R: Barnes 300 grain .375 solid, Swift 300 grain A-Frame, .375 Remington Ultra Mag, Swift 300 grain A-Frame recovered from buffalo after hitting spine. Two Swift 300 grain A-Frame bullets recovered from buffalo.*

Whitetail deer are our most popular big game animal and as a result are the basis for most hunters' experiences. The fact that whitetails are relatively easy to dispatch and that most hunters today use a rifle chambered for a cartridge that is far more powerful than is necessary, allows even the poorest bullets to drop the deer most of the time. But with bad bullet and/or cartridge choices, sooner or later one of the variables will enter into the equation and the result will be a wounding loss. Try it with bigger game, particularly on something inherently tough like elk or bears and sooner or later it will bite you in the backside. (The bear might too!)

*L to R: Win. Fail Safe, Win. Partition Gold, Win. Ballistic Silvertip, Barnes X-Bullet, Nosler Partition, Speer Grand Slam, Swift A-Frame, Hornady Interlock, Speer Hot-Cor, Nosler Ballistic Tip, Swift Scirocco & Hornady SST*

The other end of the equation is a bullet that passes completely through the animal, but due to its design does not expand and causes very little tissue damage with results that are just as poor.

An ethical hunter will choose a caliber of adequate power for the game hunted and match it with a quality bullet. For most North American hunting this bullet should be designed to expand very soon after initial impact and to hold together enough to continue through the animal completely, under all but the most extreme conditions.

Wound channels are relative to energy transfer and the frontal area of the bullet. Consider how it would look if the animal were a homogeneous material, like ballistic gelatin. As a bullet first contacts, the wound channel is bullet diameter. Then as it penetrates, the wound diameter will grow relative to the energy transferred and the contact damage caused by the expanding bullet diameter and shape. If the bullet is going to stay in the game and velocity slows as energy levels drop, the wound channel diameter will again begin to taper until it reaches current bullet diameter at the point where the bullet stops. This results in a misshapen football shaped wound channel, with a large maximum diameter, fine if it's in the right place, but if it ends short of vital tissue, problems arise. Or the more likely scenario is that the bullet tears apart and scatters small pieces which lose energy and stop penetrating. This results in a large, but very short wound channel.

With proper bullet design and initial energy the bullet exits with energy remaining. The resulting wound channel has a minimal decreasing profile and will remain near the maximum diameter all the way to the exit.

*These bullets expanded even at reduced velocities. Left is a Barnes X-Bullet and right is a Winchester Fail Safe.*

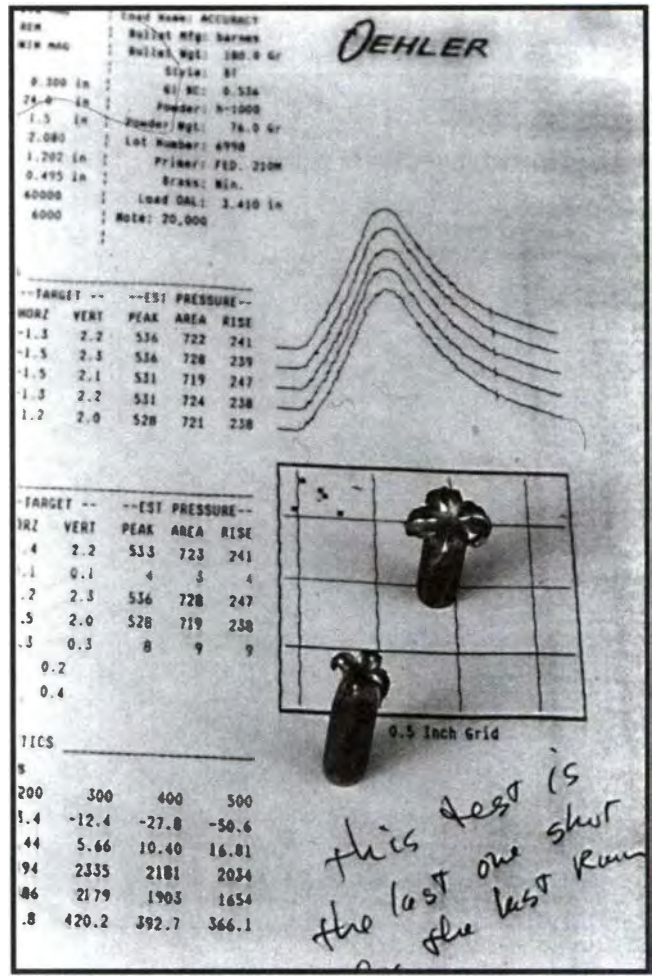


*Two Barnes X-Bullets show the results of test for expansion at the extremes of impact velocity.*

So what if the bullet exits with remaining energy?

The important thing is that it created a sufficient wound channel completely through the target. Even though that wound channel diameter may be less at its peak than that created by a bullet that dumps all its energy and fails to exit, the wound channel is much longer and has a better chance of passing through something vital. It probably also has more total area because of its length.

The results may not be as spectacular as a double lung hit with a bullet that tears itself apart, dumps its energy in a short wound channel and fails to exit, but it is much more predictable, reliable and consistent. These are far more desirable traits for an ethical hunter than dramatic impact results with a high failure potential.

As velocity increases, the terminal demands on a bullet increase exponentially. Even though they may take the same bullets, not all cartridges are going to extract the same performance from them. You simply can't expect a bullet to act the same way from a .308 Winchester as it does from the .30-378 Weatherby. It may be traveling nearly 1,000 ft/s faster from the big gun and that changes things radically. With the current trend to faster and faster cartridges it becomes more and more important to use a high quality game bullet. A bullet that performs well on deer from a .30-06 might tear apart like a varmint bullet when pushed from a .300 Ultra Mag. With their extreme velocity, the new generation "super magnum" cartridges all but demand one of the highly engineered "super bullets" to work well on big game.

Today's bullets are so well designed that they truly are a modern day ballistic miracle. But you have to do your part to make it happen. Pick the right bullet, work up a load that is accurate and learn its trajectory. Otherwise the Devil might steer it into trouble.

# 13 Reloading the 45-70 for Accuracy by Paul A. Matthews

*The 45-70 is more popular than ever and is a favorite of reloaders.*

Few shooters today use the word accuracy and the term .45-70 in the same sentence. Their concept of rifle accuracy usually stirs visions of one of the smaller calibers from a bolt action rifle wearing a scope sight. To them the .45-70 is comparable to a bulldozer competing at the Indy 500.

That is too bad, because the .45-70 is one of our classic cartridges dating back to 1873 when it was first put into the hands of our troops on the western frontier. Since that date over a century and a quarter ago, the cartridge itself has never been out of production. And since the 1960s when Navy Arms started offering their rolling block rifle chambered for this venerable cartridge, and Ruger came out with the same chambering in their No. 3 single shot, the production of rifles chambered for the .45-70 has skyrocketed. Indeed, for many years since the 1960s, the sale of reloading dies for the .45-70 has been very near the top of the popularity list.

I shot my first .45-70 cartridge over fifty years ago and have been using that cartridge ever since. For many years, right up through 1993 when I switched from hunting to competitive shooting, the .45-70 was the rifle I reached for when I took to the deer woods of Pennsylvania or went for the wild boar of Tennessee or North Carolina. And when I went into competitive shooting from 200 yards on out to 1000 yards, it was a .45-70 that I wrapped my fist around. To me, it is one of the greatest cartridges ever designed, one of the most reliable and versatile cartridges in existence today. If there is any fault with the .45-70, it lies in the shooter who has failed to understand the cartridge and its limitations. Because when you understand the .45-70 and use it within its limitations - and all cartridges have limitations of one type or another - you will find it to be superbly accurate with either jacketed or lead alloy bullets, smokeless or black powder, and with whisper loads developed for tin can plinking or full-throttle black powder loads for use on the silhouettes out to 547 yards and on paper out to 1000 yards. It is just plain and simple a great cartridge, but you have to understand it in order to get the most out of it.

Before getting into the details of reloading, I want to point out that different reloading handbooks often list entirely different charges of the same powder as a maximum recommended load for the same bullet. This does not mean that one handbook is right and the other handbook is wrong, but that there may be a variation in the cartridge case, bullet, primer or test barrel used, all

of which may have an effect on the chamber pressure developed. So I beg you, implore you and urge you to study the reloading handbooks and carefully follow the instructions as to the powder charge and bullet used as well as the rifle for which that load is intended. Do not use loading data intended for the Ruger No. 1 or No. 3 in a Winchester 1886 lever action, and if you are using a rifle originally built for black powder, my advice is to use only black powder in that rifle. If you are using smokeless powder and find you have an airspace between the powder charge and the base of the bullet, DO NOT use a filler to fill up that airspace. More than one fine rifle has had a barrel bulged or been totally destroyed by the improper use of a filler over smokeless powder. Finally, if you must use a maximum recommended load, work up to that load a half a grain at a time. More often than not, you will find your best accuracy with a load that is less than the recommended maximum.

**WARNING:** The loads appearing in this article were found to be safe in the rifles in which they were used. However, since neither the author nor Lyman Products Corporation has any control over the rifles in which you may use these loads, nor do we have any control over your loading procedures, neither the author nor Lyman Products Corporation will accept any responsibility for damage to equipment or injury or death of any person as a result of using any load shown in this article. If you choose to use one or all of the loads described in this article, you assume responsibility for any and all liability.

During the years that I hunted deer and boar with the .45-70, my favorite rifles were the Ruger single shots and the new Marlin 1895 lever action. The last two deer I killed in 1993 were with the Marlin 1895. That year I took a 9-point buck on the first day and a chunky button buck on the last day. Both deer were taken with the Hornady 350 grain flat nose jacketed bullet backed by 55 grains of IMR-3031. One shot apiece was all that was required. It should be noted that this load was worked up from the 3rd edition of the Hornady handbook which lists 55.8 grains of IMR-3031 as a recommended load for the new Marlin 1895 lever action rifle.

Although I much prefer the 350 grain Hornady bullet because of its accuracy and performance, many shooters using the .45-70 opt for the 300 grain Hornady hollow point. There is nothing wrong with this. The 300 grain bullet is a superb killer on deer when backed with a recommended charge of IMR-4198 or IMR-3031, but because of its short body length, I was never able to get quite the accuracy with the 300 grain bullet that I got with the longer 350 grain bullet.

One point that I believe should be made relative to accuracy from the .45-70 is that bullets, whether cast or jacketed, having a long body to grasp the rifling always gave better accuracy than the shorter bullets. That is to say that where the 350 grain Hornady always gave a bit better accuracy than the 300 grainer, a 400 or 405 grain bullet with a recommended charge of IMR-3031 fired from my little Ruger No. 3 would give better accuracy than the 350 grain bullet. In fact, from my Ruger No. 3, five rounds of a 400 or 405 grain jacketed bullet would fit in one large ragged hole at 100 yards.

But what kind of accuracy do we need from a .45-70 for hunting purposes? Anyone who has ever used a .45-70 for serious hunting or competitive shooting knows that the vulnerability of that cartridge lies in it high trajectory and low velocity. Knowing this to be true, any sensible hunter using the .45-70 will restrict his shots to no further than 125 yards, and he will avoid all running shots. Hunting deer within those limitations - and most woodlot deer are shot at less than 50 yards - one would have to say that 2-inch grouping capability at 100 yards is acceptable, and is surely well within the capability of the jacketed bullets mentioned thus far.

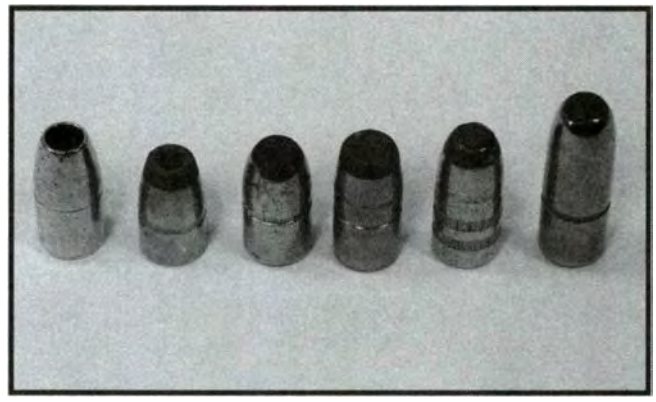

*A large variety of jacketed bullets are available for reloading the 45-70. Shown above are: 250 grain Barnes X, 300 grain Sierra flat nose hollow point, 350 grain Hornady flat nose soft point, 400 grain Speer flat nose soft point and 500 grain Hornady round nose soft point.*

For those who wish to reload with jacketed bullets in the .45-70, I strongly recommend that you first purchase 100 new cartridge cases, all of the same make and lot number. By doing this, you will be starting with cartridge cases that are as near alike in powder capacity and wall thickness as is mechanically possible to get them. This is the first step in assuring uniformity from

cartridge to cartridge. Keep in mind that of the three major domestic cartridge cases available - Winchester, Remington and Federal - the Winchester cases have the greatest powder capacity, followed by Remington. Federal cartridge cases have the thickest wall section and thus the least powder capacity.

Once you get your new cartridge cases, run them through a full-length resizing die to assure roundness, and then trim them to a length of 2.095 inches to square up the mouth of each case and to assure the same amount of neck tension on each bullet. Following this, you should remove any internal flash hole burr with a Lyman Flash Hole Uniformer, and deburr the inside and outside of the mouth of the case with a Lyman deburring tool . All of this is to get your cartridge cases as uniformly alike as possible.

As far as primers are concerned, it makes little difference within hunting ranges which brand of primer you use just so they are all of the same brand and lot number and are either a large rifle or a large rifle magnum primer as recommended in your loading data.

When it comes to the choice of powder for smokeless loads in the .45-70, always select a powder that bulks up well within the case. For heavy, full-throttle smokeless loads in a suitable rifle using either a 405 or 350 grain jacketed bullet, IMR-3031 has been a great favorite for well over fifty years. For the lighter 300 grain bullet, IMR-4198 is often the preferred powder.

If you want to load at less than full-throttle velocities, perhaps in the 1400 to 1600 fps category, SR-4759 is an excellent powder made especially for use in original black powder cartridges. It bulks up well within the case and ignites easily.

Obviously there are other smokeless powders that will bulk up in the case and give good velocities at safe pressures. These are listed in the loading tables for the .45-70 along with the expected velocity and corresponding chamber pressure.

Finally we come to crimping the bullet. Crimping serves two functions in the smokeless powder .45-70 cartridge. First, it assists in the ignition and burning of the powder. It adds more resistance to the bullet to help build up the pressures necessary to make the smokeless powder ignite and burn uniformly from cartridge to cartridge. And secondly, in a tubular magazine rifle a heavy crimp in the cannelure on the bullet is necessary to keep the bullet from being hammered further back into the cartridge case under heavy recoil. With single shot rifles, this is not a problem and only a light crimp or no crimp at all is necessary. If the bullet is crimped for use in a single shot rifle, it should be for the purpose of improving ignition and burning of the powder.

Once your new cases have been fired, it is advisable not to full-length resize them any more than necessary to permit easy chambering in the rifle in which they were originally fired. This eliminates a lot of wear and tear on the cartridge case and greatly extends its life. Not only that, but the less resizing done to the cartridge case, the better that case will fit the chamber and the more concentric the bullet will be with the bore before the cartridge is fired. This helps promote accuracy.

The best method for treating your cartridge cases once they have been fire-formed to fit the chamber, is to not full-length resize them at all, but to resize only the neck of the case with a special neck sizing die. This gives the cartridge a perfect fit with the chamber for several firings. Of course, cartridge cases that have not been resized, often will not chamber in other rifles of the same caliber, and after several firings may require full-length resizing in order to chamber easily in the parent rifle.

*Lyman offers Neck Size dies and Taper Crimp dies for the 45-70*

While most hunters using the .45-70 rely on a jacketed bullet to get the job done, there is a large percentage of hunters who realize the .45-70 was originally developed with a lead alloy bullet and is still an excellent cartridge with such bullets. The first deer I ever shot with the .45-70 was with the Lyman No. 457122 (originally 456122) Gould hollow point bullet weighing about 330 grains when cast of a 16 to 1 lead-tin alloy. That doe was 137 paces away from me and the bullet

went through the rib cage shattering the heart so that she left a highly visible blood trail for the short distance she ran.

I used a Winchester Model 1886 lever action rifle with a P.O. Ackley barrel for that shot, and had the cartridge loaded with a stout charge of World War II vintage 4895 powder. If I were to try to duplicate that load today, I would start with 51.5 grains of IMR-3031 as recommended in an IMR Handloader's Guide for a 405 grain jacketed bullet.

The Lyman No. 457122 hollow point bullet when cast of a 16 to 1 or the softer 20 to 1 lead-tin alloy makes an excellent bullet for deer. Its reputation for reliability reaches back over 100 years to the late 1800s when that bullet was especially designed by J. H. Barlow of the old Ideal Manufacturing Co. for Mr. A. C. Gould, editor of *Shooting and Fishing*.

Two other Lyman bullets which should give excellent performance on deer are Nos. 457643 and 457193. Both

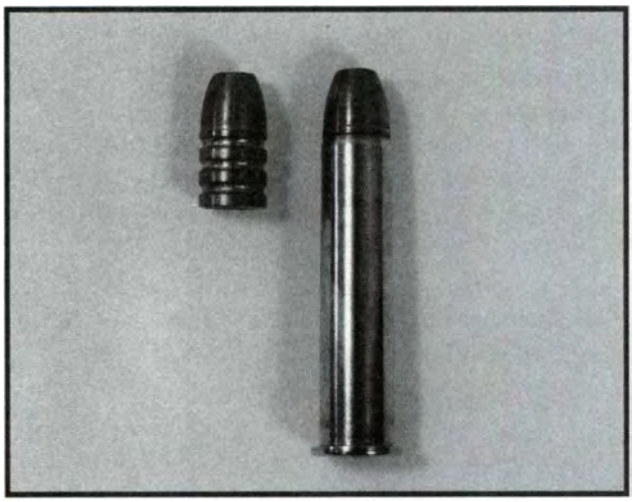

*The Lyman #457122 hollow point has been a popular hunting bullet for many years.*

of these are flat-nose bullets weighing about 400 and 405 grains respectively. Of special significance relative to accuracy is the fact that at least 60% of the overall length of each bullet is made up of driving bands and lubrication grooves. As stated earlier, bullets having a long body to grasp the rifling and to better align the bullet within the bore usually prove the most accurate. And when it comes to hunting with cast bullets, a flat nose always seems to deliver more bullet energy to the game than does a round nose or semi-spitzer.

To get the best performance from cast bullets in the .45-70, cast the bullets of a 20 to 1 or 16 to 1 lead-tin alloy and size them to 0.459 or 0.458 inch diameter. These alloys are soft enough to promote expansion without breaking up, and the 0.459 or 0.458 inch diameter is large enough to seal the bore and help prevent leading due to hot powder gases rushing around the bullet. Lubricate your bullets with either the Lyman Black Powder Gold or Super Moly bullet lubricant, both of which will work well with smokeless loads.

When it comes to smokeless powder for cast bullets in the .45-70, SR-4759 is an old time favorite especially developed for that job. IMR-3031 is another excellent powder that bulks up well within the case and seems to burn a bit cooler than SR-4759.

Since lead alloy cast bullets are not as strong structurally as a jacketed bullet, it usually pays to start at the lower end of the velocity scale and work up, checking the load for accuracy and barrel leading as you go. And if you are unable to obtain the velocity you want without an undue amount of lead in the barrel, switch to one of the slower burning powders listed in the loading tables.

Loading .45-70 ammunition with cast bullets is little different than loading with jacketed bullets except that one must be careful not to shave the side of the bullet or otherwise deform it during the bullet seating process. The best way to accomplish this is to open the mouth of the cartridge case with a Lyman M-die. This is a two-diameter neck expanding die that allows a jacketed or cast bullet to be started perfectly centered in the case without shaving the circumference of the bullet.

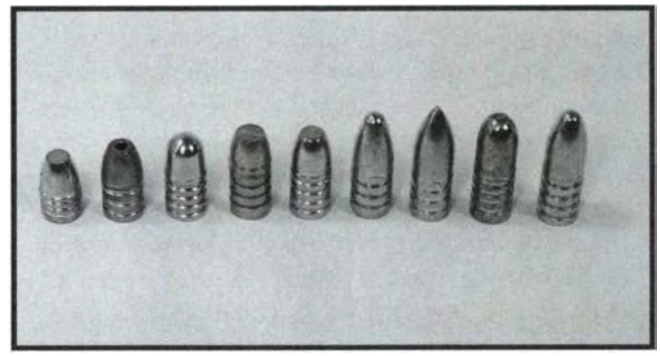

*Lyman offers a large variety of bullet moulds for the 45-70. Shown from left to right are: #457191, #457122, #457124, #457643, #457193, #457671, #457658, #457125 and #457132.*

If you are going to hunt with cast bullets in the .45-70, do not hesitate to make them of a soft lead-tin alloy

and hold your velocity down to 1300 to 1500 fps. If you do your part in placing the bullet properly, the bullet will take care of the rest. After all, the .45-90 with its 300 grain bullet at 1480 fps was considered one of the great hunting cartridges of the past. Today, the .45-70 with smokeless loads can easily duplicate and far surpass the black powder vintage .45-90.

One of the big problems in obtaining good accuracy with cast bullets is in the depth of the rifling. Marlin rifles having shallow Micro-Groove barrels are particularly difficult in the accuracy department with soft alloy cast bullets unless velocities are held to 1500 fps or below. Hardening the bullets with antimony and/or cold water quenching may permit somewhat higher velocity, but at the expense of bullet expansion on game. And don't ever think for a moment that just because you are using a .45-caliber bullet, you can consider it a pre-expanded .30-caliber and forget all about expansion. It doesn't work that way.

While we have thus far talked primarily about accuracy in the hunting field with the .45-70, for the past several years there has been a fast growing community of shooters using this venerable cartridge in vintage single shot rifles with cast bullets, black powder and iron sights. Not only are they duplicating in the accuracy department what some of our grandfathers and great-grandfathers did, they are improving upon it with accuracy levels that would probably astound the Old Timers. These shooters strive to grasp the final degree of accuracy from their rifle.

How do they do it? First, they adhere to the cardinal rule of accuracy that uniformity begets uniformity. That is, everything they do to make every shot is just exactly as it was done on the last shot and the shot before that and the shot before that. Secondly, and of equal importance, they understand the black powder cartridge and what it takes to get precision accuracy from it.

To begin with, the .45-70 was developed as a black powder cartridge, and as such was always loaded to 100% loading density. That is, with black powder it was always loaded with NO airspace between the top of the powder charge and the base of the bullet. A full 70 grain charge of black powder was usually compressed a considerable amount to accommodate the bullet, and in those government cartridges containing only 55 grains of powder in order to reduce recoil, the space between the powder charge and the base of the bullet was filled with wads. But whatever the load, when black powder was used there was never any airspace between the top of the powder charge and the base of the bullet.

The competitive black powder cartridge rifle shooter using the .45-70 usually starts out by purchasing three or four hundred cartridge cases of the same make and lot number. He goes through the same resizing, trimming and deburring processes described for the smokeless powder shooter, and then he fire-forms his cartridge cases so that they are an exact fit in the chamber of his rifle. Beyond that he does as little resizing as possible, often using only a neck die that has been honed out so as to leave the inside diameter of the mouth of the case only one or two thousandths of an inch smaller than the diameter of the cast bullet to be seated. Some shooters have the neck die honed so that a bullet can just be finger seated in the cartridge case. Whichever way it is done, any crimping is usually accomplished with a taper crimp die just sufficiently enough to remove any flare or irregularity from the mouth of the case.

When it comes to primers, the competitive black powder shooter does a lot of testing to determine which primer gives the best accuracy with the powder charge being used. Two very popular primers are the Winchester WLRM large rifle magnum primer and the Federal No. 215 large rifle magnum primer. Some shooters prefer a standard large rifle primer as opposed to the magnum primer, while others make good use of a large pistol primer. Whichever primer is used, it is selected only after considerable testing.

Black powder selection for the .45-70 usually involves GOEX FFg or Cartridge, Elephant FFg or Swiss FFg or 1-1/2 Fg. But again, the shooter has to do considerable testing to determine which powder make and granulation will provide the best accuracy in his rifle. If I were just starting out, I would select the GOEX FFg and work from there.

If you are going to load your black powder cartridges with precision accuracy as the goal, then your powder charges should be weighed to one tenth of a grain. While this may be contrary to the standard practice of loading a muzzleloader with a volumetric measure, it is vital to precision accuracy in the cartridge rifle. Whereas the amount of powder in a muzzleloader can vary by plus or minus half a grain, as long as the shooter exerts the same pressure on the ramrod each time when seating the ball, the powder will be compressed the same and velocity will be the same even though the

height of the powder column will vary.

But in a black powder cartridge, the powder column has to be compressed to an exact depth in order to maintain a precise overall length of the cartridge. Any variation in the amount of powder charge makes a variation in the amount of compression as well as velocity, and this variation will show up on your target.

Dribble the powder charge into the cartridge case through a 24-inch drop tube to settle the powder within the cartridge case. Top it off with a .45-caliber wad cut from a milk carton, vegetable fiber gasket material or low density polyethylene. Thickness of the wad can range from about 0.023 inch for the milk carton to 0.030 or 0.060 inch for the vegetable fiber and the low density polyethylene. Whichever wad you choose, always use a wad of the same type and thickness for every cartridge. (Wads and wad material are available from Buffalo Arms Co.)

While there are many different opinions on how much the powder should be compressed, I personally like to keep it between 0.060 and 0.100 inch. This provides a sufficient amount of compression to make the powder burn cleaner and more efficiently, and yet not so much compression as to start fracturing the individual kernels of powder and thus change their burning rate.

Most long-time black powder cartridge rifle shooters have tried a dozen or more different style cast bullets in an effort to obtain the finest degree of accuracy. But for the beginner just getting into the game and wanting to keep expenses down, I can think of no better bullet than the Lyman No. 457132 Postell design. Cast the bullet from a 25 to 1 or 20 to 1 lead-tin alloy, size it to 0.458 or 0.459 inch diameter and lubricate it with Black Powder Gold bullet lube. Finally, seat the bullet in the cartridge case and run the cartridge into a taper crimp die just far enough to remove any flare or irregularity on the mouth of the case.

Now is all this fuss and bother worth it? Does it really pay off with superb accuracy from a black powder cartridge using lead alloy bullets?

Back in November 2001, Dan Theodore of Mountain View, California, using a .40-65 single shot Browning rifle, fired twenty consecutive shots at 100 yards to make four 5-shot groups, each of which measured well under 1-inch from center-to-center of the widest apart holes. Not only did he accomplish this fine bit of shooting with black powder and lead alloy bullets, he

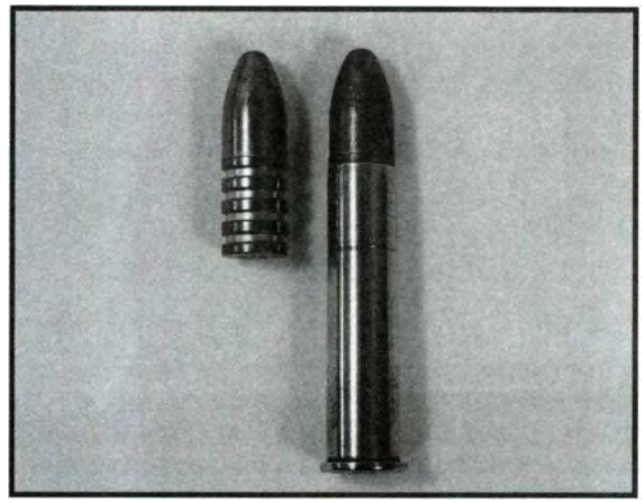

*The Lyman #457132 Postell bullet is very popular with black powder cartridge silhouette shooter due to its excellent long-range accuracy.*

did it three different times - a total of 60 rounds - just to prove it was no fluke!

Superb accuracy from a black powder cartridge rifle, whether it be a .40-65 or a .45-70, is never accidental. It is the result of precision casting of premium bullets and paying careful attention to details in the reloading process. It is the result of the study of black powder ballistics and knowing what has to be done to accomplish certain goals.

The fine accuracy accomplished by Dan Theodore at 100 yards does not necessarily translate into fine accuracy out at 385 meters (421 yards) for the turkey silhouettes nor at 500 meters (547 yards) where the rams stand. When our bullet gets out to these targets, it has lost a significant amount of linear velocity and with it some rotational velocity. And when rotational velocity drops off, bullet stability starts to deteriorate and the bullet becomes more vulnerable to wind.

When loading for accuracy on the turkeys and rams and beyond, shooters normally use heavy bullets for the caliber involved. In the case of the .45-70, this means bullets ranging from 500 to 550 grains at sufficient velocity from an 18-inch twist barrel to assure bullet stability all the way out to the target. Obviously, this means recoil and plenty of it, and lots and lots of practice so that recoil does not interfere with concentration on sight picture and trigger squeeze.

Probably the two most critical elements of accuracy with the .45-70, or any other rifle, is total concentration of sight picture and trigger squeeze. Without this,

the inherent accuracy of your rifle and ammunition is of no consequence. They can both be the best on the firing line and you will still loose out to some shooter carrying a beat up relic of dubious ancestry, but who knows how to freeze onto a sight picture and keep applying even pressure to the trigger at one and the same time.

Now what kind of accuracy does one need to hit a steel ram 547 yards away? First, shooting at silhouettes is not like shooting at a paper target with a perfectly round black aiming point that nicely fits inside your aperture front sight. In silhouette shooting the targets are of an irregular shape - chickens, pigs, turkeys and rams - and you shoot at a different target with every shot for score. The only thing these targets have in common is that their major aiming area covers a tad more than two minutes of angle at the distance at which the target is placed.

For the rams, this means that the ram target measures a shade over 12 inches from back line to belly line behind the foreleg. With this in mind, it is my opinion that to be competitive the rifle, ammunition and shooter must all be capable of minute and a half angle of accuracy or better all the way out to 547 yards. At that distance, a minute and a half angle of accuracy translates into a group measuring just under 8-5/8 inches, leaving less than two inches top and bottom for a margin of error. When you consider the influence of wind, mirage, light change and human error, it seems remarkable that any shooter ever hits a ram using a cartridge with a mid-range trajectory of around twelve feet from a rifle equipped with iron sights!

Yet shooters using the .45-70 with carefully crafted loads commonly hit eight out of ten rams, and often get all ten of them. On July 25 and 26, 1998 during a two-day 120 round match, using a .45-70 built by Ron Snover on a Remington rolling block action, I tipped 28 out of 30 rams. And during that same match on the 26th, I hit 59 pigs without a miss to set a new national record. For my load during that match, I used a 547 grain original design Postell bullet backed by 67 grains of FFg GOEX powder fired by a Winchester WLRM primer. A 0.060-inch thick vegetable fiber wad from John Walters was used over the powder and the powder was compressed about 0.090 inch.

The .45-70 has a lot of potential in the accuracy department for the shooter who has the savvy and persistence to work it all out. Not only is it accurate, but with modern loads in suitable rifles it can be adequate for any big game on the North American continent as well as for some of the critters in other places. When it comes to long range accuracy, the .45-70 is right at home, but because of its high trajectory and low velocity demands a lot more from the shooter than does a high power smokeless rifle.

This is the challenge that makes the .45-70 so great. Over fifty years ago I wrote Elmer Keith a letter criticizing him because he had said some unkind things about the .30-06. Elmer wrote back and said that more people agreed with me than with him, but if I ever had the opportunity to try a big bore rifle, try it and make up my own mind.

I did. And the .45-70 has been with me ever since.

*The author just after making a bullseye hit at 1000 yards on July 3, 1993 near Williamsport, Pennsylvania. Rifle is a Navy Arms rolling block .45-70 that was rechambered with a match reamer by John Korzinek of Canton, Pennsylvania. The rifle is equipped with a long-range windgauge tang sight and a spirit level front sight made by Ron Snover of IXL Enterprises. The load that day consisted of 52 grains of RS Pyrodex, 475 grain Lyman No. 457132 original design Postell bullet, Winchester large rifle magnum primer and a grease cookie. The throat of the barrel was wire brushed after every fifth shot.*

*Photo by Sam Saxton*

# 14 Barrel Care and Cleaning for Accuracy by Butch Fisher

*A good quality cleaning rod and a bore guide are important tools necessary to properly clean a rifle.*

I have been involved in some form of competitive shooting for over 40 years. I currently shoot in precision bench rest competitions all around the US and Canada. Obviously, as a competitive shooter, I have always been concerned with firearm accuracy. There are certainly many different and varied factors which can contribute to the accuracy of any firearm. However, despite the type of firearm being utilized, and the many variable factors involved, there is always one accuracy problem which is common to all firearms. That problem is termed very simply as "bore fouling." Any build-up of residues in the bore of a firearm will very quickly begin to cause accuracy deterioration. The rate of that deterioration can and will vary from gun to gun, but it universally affects all types of firearms. On many occasions over the years I have had individuals come to me with complaints about firearms they claim used to group extremely well. However, these firearms were now performing poorly. A few of these guns had actual problems, but the majority again fired decent groups after I performed nothing more than a proper, thorough cleaning on the firearm.

Growing up as a youngster in Pennsylvania I learned at an early age the negative effects that fouling can produce. My father had a nice collection of original Pennsylvania Rifles and he also built muzzle loading rifles as a hobby. My first experience with firearms consisted of shooting targets at 50 yards with a muzzle loading rifle he had made. I vividly remember being very disconcerted at the difficulty I encountered trying to ram a patched ball down the muzzle of that weapon after only a handful of shots. Any sort of group I might be shooting deteriorated very quickly after a just a few rounds. Subsequently, most of my shooting time was spent with patches, a cleaning jag and a bucket of soapy water trying to keep that rifle clean. Certainly the fouling created by an old can of DuPont FF black powder cannot be compared to the fouling problems we see in the modern firearms of today. But bore fouling in today's weapons is still a major contributor to accuracy deterioration.

The types and rate of fouling one encounters in modern weapons can vary greatly due to a variety of factors. Those factors can include the ammunition a shooter might utilize, the type of projectile, the bore diameter, the type, depth and twist of the rifling, and many other variables. There are also several very distinct and diverse fouling problems. **Fouling is simply the build-up of any residues in a weapon's bore.** Most shooters are familiar with powder fouling. However, fouling residues can also include several other substances. Shooters who utilize cast lead bullets will experience a build-up of lead. Copper wash from copper jacketed bullets can be a very difficult and stubborn substance to remove. It also builds up quickly. Some small caliber factory ammunition can cause a build-up of wax from the wax coatings on that ammunition. Scattergun users will often experience fouling from plastic wads which will eventually cause a deterioration in the patterns those guns shoot. In recent years, the introduction of bullet lubricating substances such as Moly and Danzac have spawned their own unique foul-

ing problems. Additives such as teflon in some lubricating oils can also create problems. Understanding and controlling all these types of fouling residues is absolutely paramount to the top performance of any firearm.

### How Fouling Affects Accuracy

To understand how fouling affects accuracy one must first have an understanding of the various types of fouling and how they build in your barrel. Powder fouling is common to all firearms. Powder fouling is primarily burnt carbon residue. When you pull the trigger on any firearm, the heat produced by the combustion of the burning powder is tremendous. It is not unlike taking a blow torch and blasting it up your barrel. Hot gases from the burning powder create immense heat and pressure. As they begin to erupt and roll out of the case behind the projectile, they first blast what is called the "lead" of the barrel. The "lead" is the small area between the end of the chamber and the "throat" of the barrel. The "throat" is where the projectile first contacts the lands of the barrel. As the pressure builds, the projectile is pushed forward through the "throat" and then spins on up through the barrel. Since the peak pressure level is concentrated in the "lead," the "throat," and a few inches beyond, the majority of the powder fouling is also concentrated in these areas. Often in the "lead" area of a firearm you will find what is called "fire cracking." These are actual microscopic cracks in the steel caused by the tremendous heat created by the cartridge. This "lead" area of the barrel usually becomes caked with residue. The heat and pressure also puts a lot of wear and tear on the "throat" area as well. Some carbon fouling will usually extend the entire length of the bore but it is much more concentrated in this lower end. As more rounds are fired, the carbon begins to build. At some point the build-up of burnt carbon residue begins to actually shrink the diameter of the bore, causing bullet pressures to rise. As more pressure is applied the projectile's ability to properly engage the lands and smoothly move down the bore becomes impaired. You now have a powder fouling problem.

Shooters who use copper jacketed bullets will also experience what is known as copper fouling. As the heat and pressure build, those gases create tremendous torque behind the projectile. This pushes the jacketed projectile forward and spinning up the barrel at high velocities. As the rifling cuts into the projectile, the high amount of friction taking place shears off microscopic fragments of copper. These microscopic fragments of copper create a "copper wash" which is blown on up the barrel. The immense amount of friction taking place causes a sort of copper plating effect in the upper portions of the barrel. As more rounds are fired this plating process continues to build. At some point the lands of the rifling can no longer penetrate the jacket and this begins to affect the movement of the projectile. You now have a case of copper fouling. This copper plating effect can be very difficult to remove if it is allowed to build.

Shooters who use cast lead bullets will also experience a build-up of lead for the same reasons as the users of copper jacketed bullets. Lead is even more malleable than copper. If you take a piece of lead and scratch it across your concrete garage floor, it will leave a distinct mark or residue due to the friction involved in the action of the movement. In the barrel of a firearm the friction involved causes cast bullets to readily shed lead. As the lead builds it will also begin to impair the smooth movement of the projectile and you will start to have a lead fouling problem. Lead can also be difficult to remove, but not nearly as difficult as copper.

Wax coatings in some factory ammunition and certainly plastic wads in shotgun shells will also cause similar fouling problems in the upper ends of barrels. However, they are usually relatively easy to remove. Bullets coated with substances such as Molybdenum Disulfide and Danzac have become popular in recent years. If allowed to go unchecked, they can also be a problem

### The Rate of Build-Up

The rate at which any form of fouling builds up in a firearm can and does vary from gun to gun. This is primarily because of the wide diversity in barrels. Most factory produced barrels fashioned by the larger firearms companies today are usually made from less expensive chrome moly varieties of steel. The mass production tooling process utilized by these manufacturers often leaves a substantial amount of tooling marks and imperfections in these barrels. These tooling scratches and imperfections are places which will catch and hold fouling. Subsequently, these barrels usually tend to foul rather quickly. Custom barrels produced by smaller companies like Lilja, Hart, Shilen, Krieger, and others around the country are usually made from better varieties of stainless steels. The tooling imperfections in these barrels are then hand lapped away by the manufacturer. The rate of fouling build-up in these custom barrels will often be retarded, to some extent, but even quality custom barrels will still foul reasonably fast. The rifling in a barrel always plays a role. The number of lands, their depth, the rate of twist, and the type of rifling will all have an effect on the rate at which the barrel will foul. For example, in my experience cut rifling tends to foul a bit more quickly than button or mandrel forged rifling. The more lands a barrel has and the deeper the grooves, the quicker it will foul. Faster twist barrels often foul a bit quicker than slower twist barrels. Bullet caliber and case size also have an effect. Smaller caliber firearms with big cases will tend to foul faster than firearms with more average size cases. This is simply because you

are using a large amount of powder to push a small diameter projectile. The more powder packed into a case, the faster the fouling. The high velocities these cartridges produce will also increase the amount of copper wash and therefore cause faster copper build-up.

### Cleaning Frequency

In competitive bench rest shooting the better shooters are usually fastidious cleaners and often clean after every five to ten rounds. Cleaning every few rounds might seem a bit excessive to the average shooter, but most competitive shooters will tell you that bore fouling starts to have a noticeable effect on accuracy after only a few rounds. How many rounds that might be depends on the firearm and the variables I discussed above. I have owned firearms that could handle 25 to 30 rounds before I began to notice any real accuracy deterioration. I have also had some that would foul after only five or six shots. The frequency of fouling will certainly vary from gun to gun but you can be assured that fouling will definitely begin to affect accuracy in all firearms at some point. Keeping a firearm free from all forms of fouling is probably the easiest chore a shooter can perform to assure that the weapon is performing at its best. Any shooter concerned with accuracy needs to clean frequently and correctly.

It is always difficult to ascertain the exact extent of fouling that is present in any firearm without the use of a bore scope. A bore scope is a tool which can be inserted down the barrel of a firearm. It magnifies the inside of the bore so as to enable the user to examine the entire length of that barrel. These wonderful instruments allow a close examination of the lands and grooves, revealing any residue build-up, barrel wear, and the barrel's overall health and condition. Obviously, since these tools are rather expensive, few shooters have the luxury of access to such an instrument. However, there are some things you can do without a bore scope to estimate the condition of your firearm. First, taking a long look through the bore can reveal a lot. Often one can see fouling with the naked eye alone. Another trick which works well when endeavoring to ascertain the extent of copper fouling is to take the barrel out into the sunlight. Hold the barrel out away from your body a foot or two and a couple feet below eye level. Put the sun over your shoulder and view the crown of the barrel from that angle. You can usually see down the first inch of the barrel. Move the barrel around until you get the sunlight to reflect off that first inch of the inside of your barrel. Bright sunlight will reflect off any copper residue below the barrel crown. If you have a fair amount of copper just below the crown, you can be certain you have it further down the bore. Another method of judging fouling is simply by feel. When working your cleaning rod through the barrel you can often feel "rough spots" where the rod does not move through smoothly. These are more than likely places that have a heavy build-up of residues. One of the easiest ways to check for severe copper fouling is an examination of your cleaning patches. If you are using a solvent like my "Butch's Bore Shine" or another copper cleaner with ammonia, a lot of blue coloration on the patch will indicate a substantial amount of copper residue.

### Cleaning Accessories

So far we have some idea of how fouling works and the problems it creates. So the question now becomes, "How do we correctly remove it?" Before cleaning your firearm, I always recommend the purchase of a few cleaning tools and accoutrements. The first purchase should always be a quality cleaning rod. The rod should be plastic coated, since metal rods can scratch a barrel. Some poorer quality plastic coated rods can also lose pieces of their coating and can then pick up particles of fouling residue while being worked through the bore. If this happens they can actually act like a file, doing damage to your barrel. So purchase a good quality rod! Your second purchase is a rod guide. A rod guide is an instrument which slides into the receiver of a bolt action rifle and is inserted into the chamber, replacing the bolt which is removed. Some guides are actually equipped with a bolt handle which can be locked into place. The front of the guide is equipped with a rubber gasket to seal the chamber. The back end of the guide extends out the back of the receiver. Some guides have a convenient solvent port cut into the top in order to allow cleaning fluids to be applied through the opening. A cleaning rod can be inserted through the rear of the guide and then pushed through into the bore. Guides come in various sizes designed to fit any chamber, and are reasonably priced. The primary purpose for using a rod guide is to allow the rod to slip smoothly into the bore. Without a guide, rods can scratch the throat area as they are inserted into the barrel. They also help eliminate some of the

*A good quality patch is saturated with solvent and is ready to be inserted into the bore guide.*

mess involved in the cleaning process by keeping solvents and residues from dripping back into your receiver.

You will also need the correct size jag, a chamber mop, and some brushes to go along with your rod. Patches are another must. Here you will probably need to experiment a bit in order to find patches of the correct thickness and consistency in order to work well in your particular barrel. What you are looking for is a patch that fits snuggly yet can be easily pushed through the bore. If your patch is a bit too tight, try placing your jag in the corner of the patch rather than the center. This often will help a thicker patch work well in a smaller barrel. I have what I consider an excellent patch out on the market that is specially treated for absorbency and corrugated for scrubbing. It will actually hold more solvent. However, any good cotton flannel patch will work.

A gun cradle is another tool I like to use. Cleaning can be vigorous and it's great to have your gun sitting in a sturdy cradle rather than trying to man-handle it on the kitchen table. Your wife might also appreciate the purchase! If you are handy, a cradle can be easily constructed or you can purchase one for a reasonable price.

It is also nice to have an old sock or some type of cover that you can slip over the rear of your stock. Some of the composite gun stocks have beautiful paint jobs; a cover will help protect them. Frankly, I've always been somewhat amazed by individuals who will pay thousands of dollars for a custom-built rifle, yet not spend a few extra dollars to purchase the equipment necessary to keep it adequately maintained. Once you have your cleaning accessories in place, you are now ready to clean your firearm.

## A Normal Cleaning Regimen

For purposes of this discussion, I am going to assume that your firearm is ready for what I call a normal maintenance cleaning. By normal maintenance I am referring to a firearm that has been fired no more than 15 to 25 times. If more rounds have been fired you will probably have more severe fouling and it must be treated differently. The first thing you need is a quality solvent. I am definitely going to recommend my product, Butch's Bore Shine solvent. I formulated BBS to be what I call a one-step patch solvent. That means that it is designed to work, in most cases, with only a few patches in order to eliminate the need for brushing. I call it a one-step product because unless your barrel is severely fouled, BBS will remove all forms of fouling, including copper, quickly and without too much effort. Most products on the market today will only work on one form of fouling and you need several different products to properly clean a barrel. As I stated above, I generally recommend a maintenance cleaning every 15 to 25 rounds. This figure will likely vary from gun to gun but can be used as a good rule of thumb or starting point. I have found that accuracy generally starts to be affected by bore fouling somewhere around that figure in most firearms. Just remember, the more you shoot the more the fouling build-up. My regimen only requires a few patches and can be performed very quickly so there is no excuse not to be a diligent cleaner.

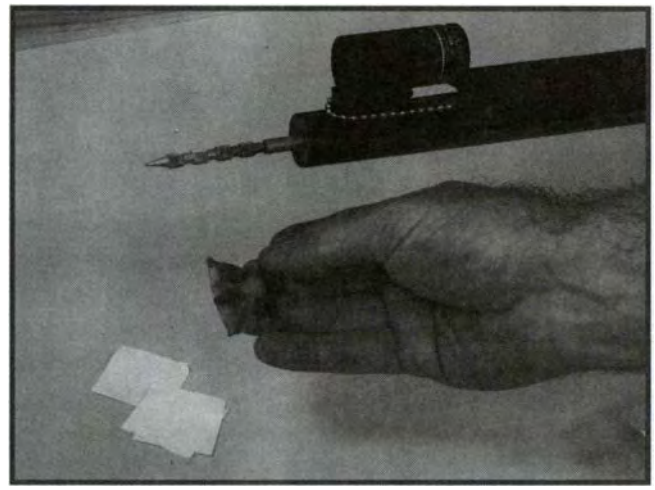

*The first patch run through a dirty barrel will come out completely soiled from powder fouling.*

To begin, place a patch on the point of your rod jag and push it into the rear of the rod guide until it reaches a point directly below the solvent port. Liberally dispense enough solvent into the port to thoroughly saturate your patch. Push the patch on through the bore slowly until it exits the muzzle. This first patch will be black and very dirty. Most of the residue on the patch will be from powder fouling. When pushing the cleaning rod through a bore be careful that you do not put undo pressure on the rod in an upward or downward direction, as this can cause your rod to bow and rub against the barrel. This can cause scratches. Follow the first patch with a second liberally saturated patch. However, be sure to wipe your rod with a towel or piece of cloth between each patch. Wiping the rod removes any grit that might have been picked up so that it won't scratch the barrel if the rod accidentally comes into contact with it. Inspect the second patch, it shouldn't be nearly as dirty as the first. Continue with another saturated patch. Short stroke this patch back and forth as you push it through the bore, utilizing a little vigor. Carefully examine the third patch for signs of blue coloration which indicates copper fouling. If you find a fair amount of blue color, short stroke a couple more patches. When a patch finally exits reasonably clean you can follow with a couple dry patches to remove any solvent that might remain in the bore. A very small amount of blue color can show up on a clean patch. This is caused by the brass jag (which contains copper) rather than copper fouling in the

*A line-up of patches shows the cleaning process from start to finish. Watch for any blue discoloration on the patches, which would indicate copper fouling in the barrel.*

barrel. Always conclude a cleaning with lubrication. I will discuss lubrication later. This simple cleaning regimen, if done frequently before fouling has a chance to become severe, should keep most weapons performing as intended.

### Severe Fouling

Sometimes shooters will fire 100 rounds or more without cleaning. And some individuals utilizing jacketed bullets will clean only with a powder remover. In these instances, you can be sure that bore fouling has been allowed to become much more severe. If you clean with only a powder solvent, copper or lead fouling can really become a problem since most powder solvents, unlike BBS, won't work well on copper or lead. Therefore, your cleaning techniques will have to be more complex and diligent. You will now have to resort to brushing. Never use a brush with steel bristles. Steel brushes can scratch and damage a bore. I much prefer a bronze brush. There are nylon brushes available but I just don't think they do a decent enough job. Before brushing try another couple of patches liberally soaked with my BBS. Run them through the bore, then sit back and let it soak. You can soak your barrel with BBS as long as you like. BBS will not harm barrel steel. Letting it soak will allow the solvent to work on the fouling. Now screw the brush into your rod and push the rod into the guide. Liberally soak the brush with solvent and push it on through your barrel. Pull the brush back through on the reverse stroke. Continue this process one stroke for every round you think was fired. One round per stroke is just something I use as a gauge, or rule of thumb, it's not any hard and fast rule. Severe fouling may require additional brushing or might clean up with just a few strokes. It depends on how severely fouled the barrel is. Lead fouling and heavy carbon will usually clean out with a good brushing but copper can at times be a much more difficult problem to alleviate. After you have completed brushing, switch back to the jag and run a solvent soaked patch through the bore. You might now see a lot of blue color on the patch. This is because there is copper in a bronze brush as well as copper in your barrel. Much of the blue color on your patch is from the brush, not the barrel. BBS solvent removes all forms of fouling, including copper, and therefore will remove some of the copper from the brush as you are cleaning. Therefore, always rinse your brush well after using BBS because any solvent left on the brush will continue to eat away at the bristles and turn the brush black. I use lacquer thinner for rinsing but even water will help if you have nothing else available. After rinsing the brush, squeeze it with a rag or an old towel to remove any excess. This helps give your brush a longer life. However, brushes are very reasonably priced and the cost is well worth a clean gun. Now try another patch or two soaked with solvent. Closely examine these patches for blue color. There should be little or no blue color present if your brushing did the job. Once you get a color free patch, dry the bore and follow with lubrication.

If after a thorough brushing you are still finding blue color on your patches, or perhaps feeling tight spots in the barrel which you think might still be fouling, you will probably have to resort to the use of a bore paste. Bore pastes are products that contain abrasives. They can be found in most sporting goods stores. Wrap a patch around your jag, or you can utilize an old used brush. Heavily coat it with the bore paste. Vigorously work your rod back and forth through the bore five to ten times. Remember, bore pastes are abrasives, and if overused can do damage to the barrel. Use them sparingly! With a bore paste you are actually sanding the fouling out of a barrel. However, the use of a bit of bore paste every several hundred rounds shouldn't harm a barrel. Again, follow with solvent soaked patches to clean out the paste and check for blue. Once a patch comes through clean, dry the bore and lubricate it.

### Cleaning a Moly/Danzac Fouled Barrel

Since I created BBS, many of the questions I field from shooters concern cleaning techniques for use with firearms that utilize coated bullets. Bullets coated with substances such as Molybdenum Disulfide and Danzac have become popular in recent years. Actually, variations of these coatings have been around since the 1950's. Users and manufacturers now tout longer barrel life, higher velocities, and reduced copper fouling among the benefits of coated bullets. I find that Moly build-up, if allowed to go unchecked, can create a real mess in a barrel. I have observed severe Moly fouling in

*Butch's gun care products include Bore Shine cleaning solvent, Black Powder Bore Shine cleaning solvent, Gun Oil and "Triple Twill" cleaning patches.*

barrels using a bore scope. The Moly build-up is usually concentrated several inches above the throat, although it can also extend further up the barrel. It appears very irregular and knobby looking, not unlike snake or lizard skin.

In examining cleaning procedures for firearms that utilize Moly/Danzac, I think there are some variables we need to look at. There are probably some definite benefits with Moly/Danzac such as reduced copper fouling. Logic dictates to me that shooters should not have to clean as often when using these substances. However, when comparing the cleaning frequency of firearms using standard bullets to those using coated bullets, at what point do we set that variable? This can be a real problem and one that will not be uniform to all firearms. It requires experimentation with the individual firearm involved. In my experience, firearms using Moly/Danzac that are cleaned infrequently (after 50 or more rounds), usually tend to have fouling build-up problems in varying degrees. The more rounds fired between cleaning, the bigger the problem. Therefore, one should experiment, but certainly adjust the cleaning frequency downward if experiencing any form of Moly/Danzac build-up. Since I am a fastidious cleaner, I recommend my cleaning regimen every 15 to 25 rounds for regular bullets. I would extend that out to perhaps 40 rounds for shooters using Moly/Danzac and start from there. Some knowledgeable individuals who shoot with Moly and clean with BBS feel their cleaning results have been effective with that frequency. Since BBS is primarily a patch solvent it does not require brushing if used frequently. Brushing can remove the Moly coating on the barrel surface and defeat the purpose of the product. If you do get a case of severe Moly/Danzac build-up, you will have to resort to the brushes or possibly a bore paste. Just follow the same procedures I discussed in the severe fouling segment. Remove all fouling and start again from scratch.

### Lubrication

Once you have a barrel that is clean of all forms of fouling you should always coat the barrel with a light gun oil. Shooting over a dry barrel will produce immediate copper streaking and can also cause excess wear to the bore. Some individuals are leery about using oil because they are overly concerned about first shot accuracy. They think an oiled barrel will cause a flyer on the first shot after cleaning. This can be true to some extent; however, if your barrel is squeaky clean and you follow your oiled patch with a dry patch in order to remove excess oil, your first point of impact should be quite close to your target aim. The benefits of a lightly lubricated barrel, in my opinion, far outweigh the risk of a flyer on that first round. Oil will fill those minute pores and tool marks in your barrel, creating a smoother surface to shoot over. Oil will also retard fouling to some extent, allowing more rounds of accurate shooting. Think of your barrel as the bore of a gasoline engine and the bullet as the piston. You would never start that engine without oil for lubrication. The same is true of a firearm.

I experimented for over two years with various types of oils in developing my Butch's Gun Oil. My oil is a special blend of several natural oils that hold up very well under the high pressures and the tremendous heat created by a cartridge. It also contains a rust inhibitor for the maximum in corrosion protection. But any light gun oil will certainly work better than no oil to protect your barrel and to extend its life and accuracy. The only lubricants I would avoid are oils containing synthetic additives such as teflon. I have found that some additives can create a fouling problem of their own. Once you have lubricated the barrel, remove your rod guide. You can now take a chamber mop and give the chamber a quick turn or two so that you remove any dirt, drips or residue from that area. Whenever you do an extensive cleaning, you should always use a little bolt grease on the lugs and on the bolt cam. There are several quality high pressure greases available at your gun store. You are now ready to shoot again and your firearm should perform with the accuracy it was designed to provide.

Good Luck & Good Shooting !
Butch Fisher

*The author, Butch Fisher, is a well known bench rest competitor and is the originator of Butch's Gun Care products.*

# Section 5

Introduction to Data . . . . . page 126

Rifle Data . . . . . page 131

Handgun Data . . . . . page 312

Thompson/Center
Contender and Encore . . . . . page 366

# INTRODUCTION TO DATA
## Important: Please Read

The data in this section cannot be used without a full understanding of what it represents or without complete reloading knowledge. Any attempts to use this data without the necessary cautions, procedures and background knowledge could be extremely dangerous causing personal and property injury, even death.

The Data listed in this section has been tested by Lyman technicians and found safe when loaded with their test components, tooling, procedures and finished cartridge dimensions and when fired under laboratory controlled conditions in the test firearms. The publisher and editors have no control over how reloading is conducted by the individual. Every change in equipment, procedure, component lot, finished cartridge dimensions and firearm used will effect ballistics and/or the safety and usefulness of a load. Therefore, no warranties are implied or expressed for the data and copy contained in this book. We specifically disclaim any warranties of fitness for any and all particular purposes and specifically disclaim any and all liability for consequential damages of any kind.

The individual assumes all risks for the safety of reloaded ammunition. Improperly loaded ammunition, or the failure to follow all necessary precautions, may result in serious personal injury and/or death to the shooter or bystanders.

There are many precautions to which the reloader must adhere. This introduction deals with many of these but cannot possibly foresee, or include, all possible cautions or procedures.

Maximum listed loads must always be worked up to carefully. **ALWAYS START WITH THE SUGGESTED STARTING LOAD** and develop the load slowly, carefully, firing at least ten shots at each incremental propellant charge weight.

### Test Components

Keep in mind that the test components are not of Lyman manufacture. Therefore, it is possible that production changes which would effect ballistics or load safety could occur without Lyman's knowledge. If there is any doubt, created for any reason, including unexpected results from even a single shot, immediately stop. Do not proceed with reloading or fire another shot until you have contacted the component manufacturer and cleared up the difficulty.

### Test Specifications

These are self explanatory and can sometimes help the shooter form some judgment as to performance in their firearm.

### Cartridge Drawing

This information is based on the maximum allowable loaded cartridge dimensions according to accepted industry standards. With the exception of bullet diameters, it is unlikely that the reloader will ever encounter a cartridge with these dimensions unless a problem is present. The listed dimensions, when compared with the reloader's ammo dimensions can be a help in making certain maximum dimensions are not exceeded. For example, if your loaded cartridges have a neck diameter equal or greater than the listed dimension for your cartridge the ammo should not be fired.

### Comments

The information given here is to help the reloader with component selection and/or to impart specific information about the cartridge. The comments should always be read for specific loading suggestions which may make the reloader's work go easier.

### Bullets

Not every possible bullet has been tested. We have used bullets which we feel are of a popular weight and type. The listed data for each bullet is all of the data we can supply at this time. Keep in

mind that seating depths can cause noticeable changes in ballistics. This is especially true for handgun ammunition. It is strongly suggested that the specific cartridge overall length be used as shown.

## Powders

We have used powders that were generally popular at the time the specific testing was conducted. Not every cartridge was shot for this edition. Thus, some of the newer propellants may not be listed with some of the less popular loadings or bullets. Where a single or a few specific powders have proven the best possible choices with respect to ballistic uniformity, we have identified these loads as "accuracy loads". While not actually fired at targets, all accuracy loads have high potential for producing outstanding accuracy since uniform internal ballistics is critical to accuracy on the target. You cannot have one without the other.

## Suggested Starting Grains

Loads shown in this column are the place to begin load development. Use the exact charge shown. Never go below the starting charge as to do so can sometimes cause dangerous conditions. Lighter charges can sometimes result in dangerously high pressure. Work up from the starting charge to the maximum charge slowly and in small increments. Be sure you have sufficient knowledge to interpret the results of your progressively heavier charges. Of course, you may choose not to use a maximum load and stay at the starting charge or some point between it and the maximum load.

As a beginning handloader you may want to confine all loads to the starting charges. When you are familiar with all the aspects of ammo assembly then you can begin to work up loads.

## Maximum Load Grains

Maximum charges are never to be exceeded. THEY ARE NOT DELIBERATELY HELD TO CONSERVATIVE LEVELS. They are the exact charge that produced the maximum pressure level allowed or otherwise proved to be the maximum charge we could list. Never use any maximum charge without carefully working up to it from the Suggested Starting Grains.

It is quite possible that listed maximum loads may not be safe in your firearm, with your components, with your loading procedures or with your finished cartridge dimensions. Use caution when developing a load. If even a single cartridge shows evidence of excessive pressure stop using the load and propellant. Switch to another propellant and begin the process again.

Should trouble continue, stop all loading and contact the component manufacturer.

Maximum load listings are dependent on a number of criteria beyond average pressures of the loads. Ballistics must be uniform or individual high and low pressures could be dangerous. The amount of powder that will fit into the case without excess compression (this will vary with case lots, powder lots, and bullet seating depth), performance at high or low temperatures, muzzle flash and other important factors are considered when we develop maximum loads. Never assume listed data can be exceeded.

## Compressed Loads

All compressed loads are indicated with a + sign. Depending upon the volume of the specific case lot being used the load may or may not fit into the case. Never attempt to force feed the powder into the case. If the bullet cannot be started into the case reduce the powder charge to allow for 1/10" of free space in the case neck. Cases which bulge after bullet seating should not be used. Never compress powder so that it causes case bulging. For more information on determining the suitability of a compressed load refer to the chapter on powder.

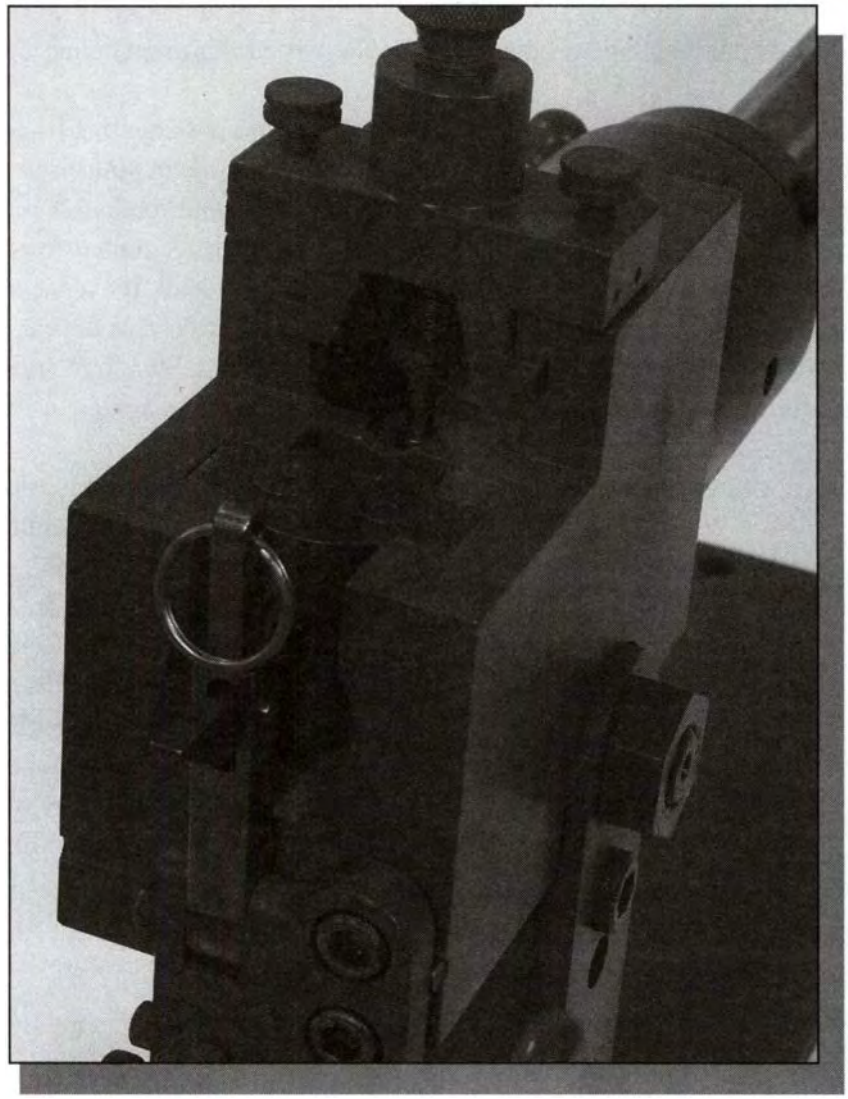

*Universal Receiver set-up for C.U.P. pressure testing*

# 17 Remington

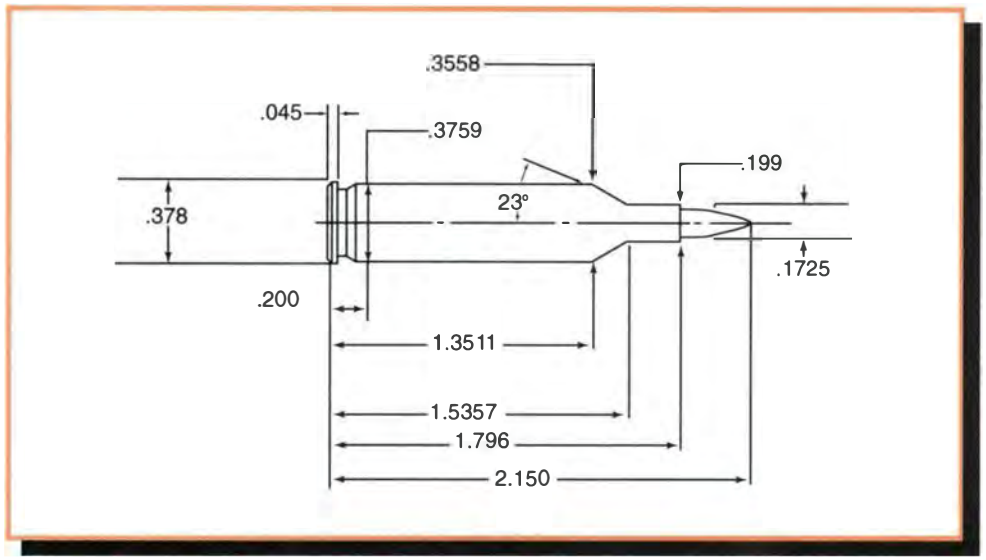


**Comments:**

Introduced in 1971 by Remington this case, based on the 222 Remington has never been very popular. Most of the lack of popularity stems from practical reasons.

The 17 caliber cartridges tend to foul barrels quickly. With most rifles, if the bore is not thoroughly cleaned every 15 shots or so, accuracy quickly disappears. It is not every gun shop that stocks 17 caliber bullets or the skinny cleaning rods required.

Factory ammo achieves a velocity of about 4,000 fps. The reloader can duplicate this speed using IMR 4320.

**Test Components:**

Cases . . . . . .Remington
Trim-to Length . . . . . .1.786"
Primers . . . . . .Remington 7½
Primer Size . . . . . .Small Rifle
Lyman Shell Holder . . . . . .No. 26
Jacketed Bullets Used . . . . .Hornady HP #1710, 25 gr.

**Test Specifications:**
**(Velocity Only)**

Firearm Used . . . . . .Remington Model 700
Barrel Length . . . . . .24"
Twist . . . . . .1-10"
Groove Dia. . . . . .172"

**25 gr. Jacketed HP**
2.150" OAL

**BC:** .187
**SD:** .121

| Powder | Sugg Starting Grains | Velocity fps | Pressure C.U.P. | Max Load Grains | Velocity fps | Pressure C.U.P. |
|---|---|---|---|---|---|---|
| **IMR-4198** | 17.0 | 3478 | — | **19.3** | **3830** | — |
| RX7 | 17.0 | 3473 | — | 19.0 | 3759 | — |
| IMR-3031 | 20.0 | 3452 | — | 22.0 | 3857 | — |
| BL-C (2) | 20.3 | 3450 | — | 21.9 | 3731 | — |
| 748 | 20.0 | 3418 | — | 22.8 | 3761 | — |
| IMR-4895 | 21.5 | 3616 | — | 23.3 | 3934 | — |
| IMR-4064 | 21.0 | 3455 | — | 23.0 | 3819 | — |
| IMR-4320 | 22.5 | 3692 | — | 24.2 | 4023 | — |

**Note:** Loads shown in shaded panels are maximum. Loads shown in bold designate potentially most accurate load.

# 22 Hornet

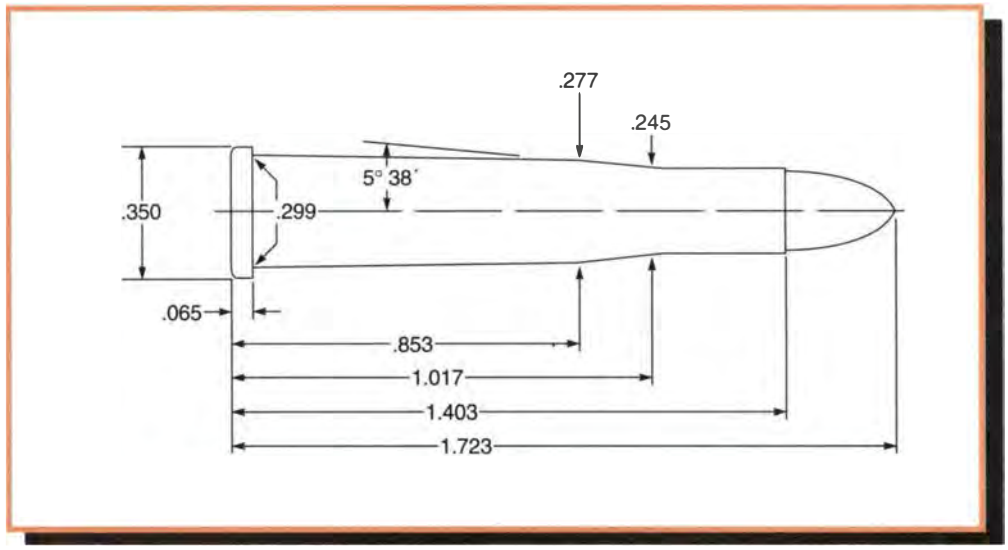


**Comments:**

The 22 Hornet evolved out of experiments with the old 22 WCF cartridge at Springfield Armory during the 1920s. Any shooters loading for an older rifle should be aware that two different groove diameters exist for the Hornet. All currently produced 22 Hornets utilize the .224" diameter groove common to all .22 caliber center-fire rifles. Most rifles manufactured up to the World War Two period have a .223" diameter groove. If in doubt, slug the bore and select the appropriate diameter bullet. The Hornet is a long-time favorite among handloaders and is a fine cartridge out to 150 yards. Its accuracy, mild recoil, and wide-selection of quality rifles and pistols add to its appeal.

The Hornet is not similar to any other current cartridge. As such, several precautions are necessary. Case walls of the Hornet are quite thin and easily crush if the die is not properly adjusted. The expander button installed in the full-length sizing die must be adjusted as low as possible without contacting the inside bottom of the case. Improper adjustment of the expander button can shear off the upper portion of the neck leaving it stuck within the die body. Some shooters prevent any such problems by simply removing the expander button completely and using an M-die to neck expand as in a three-die set. Suitable powders are limited due to the shape and capacity of the cartridge case. Powders regarded as slow pistol powders or very fast rifle powder fall within this rather narrow burn rate. 40 and 45-grain bullets usually work best with the Hornet's 1-16" twist. Most manufacturers produce bullets in both diameters constructed specifically for the Hornet's performance level.

**Test Components:**

Cases . . . . . .Winchester
Trim-to Length . . . . . .1.393"
Primers . . . . . .WSR
Primer Size . . . . . .Small Rifle
Lyman Shell Holder . . . . . .No. 4
Jacketed Bullets Used . . . . . .Sierra JSP #1200, 40 gr.
Hornady JSP #2230, 45 gr.
Hornady V-Max #22261, 50 gr.
Speer JHP #1035, 52 gr.
Hornady SPSX #2260, 55 gr.
Cast Bullets Used . . . . . .(sized to .224" dia)
*gas check bullet *#225438, 44 gr.
*#225415, 55 gr.

**Test Specifications:**
**(Velocity & Pressure)**

Firearm Used . .Ruger K77/22VHZ, Universal Receiver
Barrel Length . . . . . .24"
Twist . . . . . .1-16"
Groove Dia. . . . . .Ruger; .224"
Universal Receiver; .223"

**40 gr. Jacketed JSP** — 1.722" OAL — **BC:** .122 **SD:** .114

| Powder | Sugg Starting Grains | Velocity fps | Pressure C.U.P. | Max Load Grains | Velocity fps | Pressure C.U.P. |
|---|---|---|---|---|---|---|
| 2400 | 7.2 | 2007 | — | 8.0 | 2235 | — |
| N110 | 8.2 | 2384 | — | 9.2 | 2627 | — |
| H110 | 9.9 | 2592 | — | 11.0 | 2805 | — |
| IMR 4227 | 10.5 | 2534 | — | 11.7+ | 2671 | — |
| **AA1680** | 12.6 | 2547 | — | **14.0+** | **2768** | — |

**45 gr. Jacketed JSP** — 1.722" OAL — **BC:** .202 **SD:** .128

| Powder | Sugg Starting Grains | Velocity fps | Pressure C.U.P. | Max Load Grains | Velocity fps | Pressure C.U.P. |
|---|---|---|---|---|---|---|
| **2400** | 7.9 | 2235 | — | **8.8** | **2506** | — |
| N110 | 7.9 | 2322 | — | 8.8 | 2472 | — |
| H110 | 9.1 | 2383 | — | 10.2 | 2664 | — |
| IMR 4227 | 10.3 | 2406 | — | 11.5+ | 2652 | — |
| AA1680 | 11.2 | 2323 | — | 12.5+ | 2537 | — |

**Note:** Loads shown in shaded panel are maximum.
Loads shown in bold designate potentially most accurate load.
+Designates a compressed powder charge.

### 50 gr. Jacketed V-Max
1.723" OAL

BC: .242
SD: .142

| Powder | Sugg Starting Grains | Velocity fps | Pressure C.U.P. | Max Load Grains | Velocity fps | Pressure C.U.P. |
|---|---|---|---|---|---|---|
| 2400 | 6.3 | 1775 | — | 7.0 | 2014 | — |
| N110 | 7.3 | 2174 | — | 8.2 | 2303 | — |
| H110 | 8.5 | 2292 | — | 9.5 | 2549 | — |
| **IMR-4227** | **9.9** | **2350** | — | 11.0 | 2576 | — |
| AA 1680 | 9.9 | 2181 | — | 11.0 | 2341 | — |

### 52 gr. Jacketed JHP
1.723" OAL

BC: .225
SD: .147

| Powder | Sugg Starting Grains | Velocity fps | Pressure C.U.P. | Max Load Grains | Velocity fps | Pressure C.U.P. |
|---|---|---|---|---|---|---|
| 2400 | 6.1 | 1653 | — | 6.8 | 1955 | — |
| N110 | 7.2 | 2103 | — | 8.0 | 2217 | — |
| **H110** | **8.1** | **2193** | — | 9.0 | 2425 | — |
| IMR-4227 | 9.0 | 2233 | — | 10.0 | 2404 | — |
| AA 1680 | 9.7 | 2094 | — | 10.8 | 2300 | — |

### 55 gr. Jacketed SPSX
1.723" OAL

BC: .235
SD: .157

| Powder | Sugg Starting Grains | Velocity fps | Pressure C.U.P. | Max Load Grains | Velocity fps | Pressure C.U.P. |
|---|---|---|---|---|---|---|
| 2400 | 5.8 | 1591 | — | 6.5 | 1752 | — |
| N110 | 6.9 | 1989 | — | 7.7 | 2092 | — |
| **H110** | 7.6 | 1945 | — | **8.5** | **2190** | — |
| IMR-4227 | 8.1 | 1941 | — | 9.0 | 2171 | — |
| AA 1680 | 9.1 | 1963 | — | 10.2 | 2098 | — |

### #225438
44 gr. (#2 Alloy) 1.675" OAL

BC: .094
SD: .125

| Powder | Sugg Starting Grains | Velocity fps | Pressure C.U.P. | Max Load Grains | Velocity fps | Pressure C.U.P. |
|---|---|---|---|---|---|---|
| Unique | 4.2 | 1945 | — | 4.7 | 2038 | — |
| 2400 | 5.4 | 1585 | — | 6.0 | 1742 | — |
| N110 | 6.3 | 1707 | — | 7.0 | 2069 | — |
| H110 | 7.2 | 1913 | — | 8.0 | 2173 | — |
| IMR-4227 | 7.2 | 1711 | — | 8.0 | 1909 | — |
| AA 1680 | 9.4 | 2076 | — | 10.5 | 2325 | — |

### #225415
55 gr. (#2 Alloy) 1.694" OAL

BC: .116
SD: .157

| Powder | Sugg Starting Grains | Velocity fps | Pressure C.U.P. | Max Load Grains | Velocity fps | Pressure C.U.P. |
|---|---|---|---|---|---|---|
| Red Dot | 2.0 | 1060 | — | 3.7 | 1645 | — |
| 700X | 2.0 | 1050 | — | 3.7 | 1665 | — |
| Green Dot | 2.5 | 1230 | — | 4.2 | 1765 | — |
| PB | 2.5 | 1185 | — | 4.2 | 1705 | — |
| Unique | 3.0 | 1320 | — | 4.6 | 1805 | — |
| SR-7625 | 3.0 | 1350 | — | 4.4 | 1745 | — |
| H110 | 4.2 | 1124 | — | 6.5 | 1722 | 20,700 |
| SR-4759 | 5.6 | 1266 | 13,500 | 7.5 | 1821 | 25,700 |
| Rx7 | 6.5 | 1159 | — | 9.5 | 1785 | 15,300 |

**Note:** Loads shown in shaded panels are maximum.
Loads shown in bold designate potentially most accurate load.

# 218 Bee

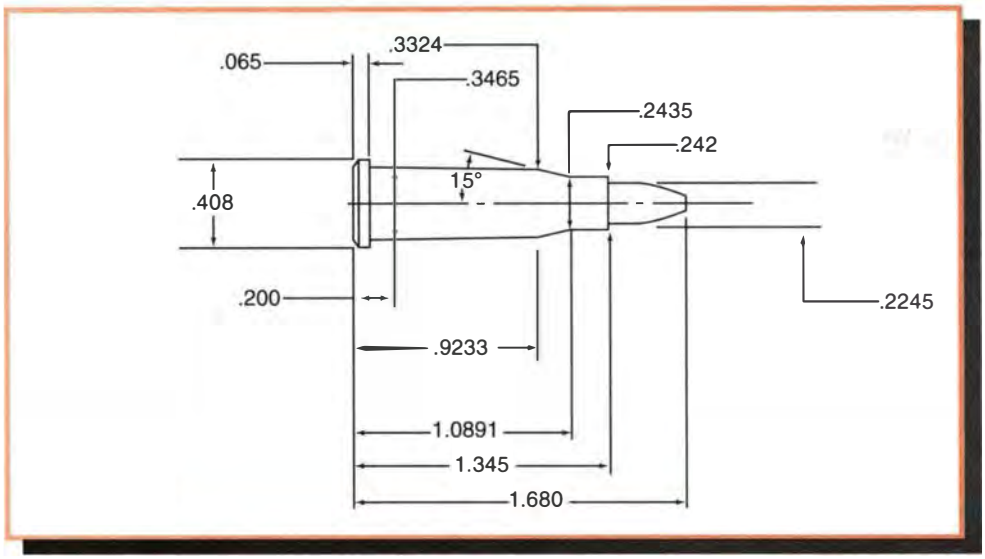


**Comments:**

The reloader cannot generally duplicate advertised factory ballistics with canister powders currently available. When loading ammo for use in tubular magazines DO NOT USE ANY SHARP NOSED bullets. Cartridges for tubular magazines must be loaded only with bullets having blunt noses.

Hornet style bullets must be used if expansion is to be certain. IMR 4227 seems the best powder to begin with, along with bullets of 45-grains.

Accuracy in lever action rifles is seldom impressive but when used in a bolt or single shot action the 218 Bee often gives accuracy approaching that of the 22 Hornet.

**Test Components:**

Cases . . . . . .Remington
Trim-to Length . . . . . .1.335"
Primers . . . . . .Remington 6½
Primer Size . . . . . .Small Rifle
Lyman Shell Holder . . . . . .No. 10
Jacketed Bullets Used . . . . .Speer Sp. SP #1017, 40gr.
Sierra Varminter #1210, 45gr.
Sierra SMP #1320, 50gr.
Speer HP #1035, 52 gr.
Sierra SMP #1350, 55gr.
Cast Bullets Used . . . . . .(sized to .223" dia)
*gas check bullets *#225415, 55gr.

**Test Specifications:**
**(Velocity Only)**

Firearm Used . . . . . .Winchester Low Wall
Marlin Over/Under
Barrel Length . . . . . .Winchester; 20"
Marlin; 26"
Twist . . . . . .1-16"
Groove Dia. . . . . ..223"

**40 gr. Jacketed Sp. SP**
1.680" OAL
**BC:** .144
**SD:** .114

| Powder | Sugg Starting Grains | Velocity fps | Pressure C.U.P. | Max Load Grains | Velocity fps | Pressure C.U.P. |
|---|---|---|---|---|---|---|
| 2400 | 11.0 | 2645 | — | 12.5 | 2906 | — |
| **IMR-4227** | 11.0 | 2457 | — | **13.5** | **2932** | — |
| IMR-4198 | 14.0 | 2564 | — | 15.0+ | 2762 | — |

**45 gr. Jacketed Varminter**
1.680" OAL
**BC:** .137
**SD:** .128

| Powder | Sugg Starting Grains | Velocity fps | Pressure C.U.P. | Max Load Grains | Velocity fps | Pressure C.U.P. |
|---|---|---|---|---|---|---|
| 2400 | 10.5 | 2463 | — | 12.0 | 2777 | — |
| **IMR-4227** | 11.5 | 2481 | — | **13.0** | **2754** | — |
| IMR-4198 | 13.0 | 2309 | — | 14.0 | 2564 | — |

**Note:** Loads shown in shaded panels are maximum.
Loads shown in bold designate potentially most accurate load.
+Designates a compressed powder charge.

**50 gr. Jacketed SMP**
1.680" OAL
**BC:** .190
**SD:** .142

| Powder | Sugg Starting Grains | Velocity fps | Pressure C.U.P. | Max Load Grains | Velocity fps | Pressure C.U.P. |
|---|---|---|---|---|---|---|
| 2400 | 10.0 | 2331 | — | 11.5 | 2617 | — |
| **IMR-4227** | 11.0 | 2331 | — | **12.5** | **2617** | — |
| IMR-4198 | 12.0 | 2105 | — | 13.0 | 2325 | — |

**52 gr. Jacketed HP**
1.680" OAL
**BC:** .225
**SD:** .147

| Powder | Sugg Starting Grains | Velocity fps | Pressure C.U.P. | Max Load Grains | Velocity fps | Pressure C.U.P. |
|---|---|---|---|---|---|---|
| 2400 | 9.5 | 2178 | — | 10.5 | 2487 | — |
| **IMR-4227** | 10.5 | 2159 | — | **11.5** | **2506** | — |
| IMR-4198 | 12.0 | 2083 | — | 13.5 | 2267 | — |

**55 gr. Jacketed SMP**
1.680" OAL
**BC:** .212
**SD:** .157

| Powder | Sugg Starting Grains | Velocity fps | Pressure C.U.P. | Max Load Grains | Velocity fps | Pressure C.U.P. |
|---|---|---|---|---|---|---|
| 2400 | 9.5 | 2183 | — | 10.5 | 2369 | — |
| **IMR-4227** | 10.0 | 2087 | — | **11.5** | **2380** | — |
| IMR-4198 | 12.0 | 2145 | — | 13.2 | 2309 | — |

**#225415**
55 gr. (#2 Alloy) 1.595" OAL
**BC:** .116
**SD:** .157

| Powder | Sugg Starting Grains | Velocity fps | Pressure C.U.P. | Max Load Grains | Velocity fps | Pressure C.U.P. |
|---|---|---|---|---|---|---|
| *Red Dot | 2.8 | 1295 | — | 4.7 | 1805 | — |
| ***700x** | 2.8 | 1310 | — | **4.7** | **1805** | — |
| *Green Dot | 3.3 | 1410 | — | 5.2 | 1915 | — |
| *PB | 3.3 | 1365 | — | 5.2 | 1845 | — |
| *Unique | 3.7 | 1450 | — | 5.7 | 1960 | — |
| *SR-7625 | 3.8 | 1480 | — | 6.0 | 2005 | — |

**Note:** Loads shown in shaded panels are maximum.
Loads shown in bold designate potentially most accurate load.
*Tested in a Winchester Low Wall

# 222 Remington

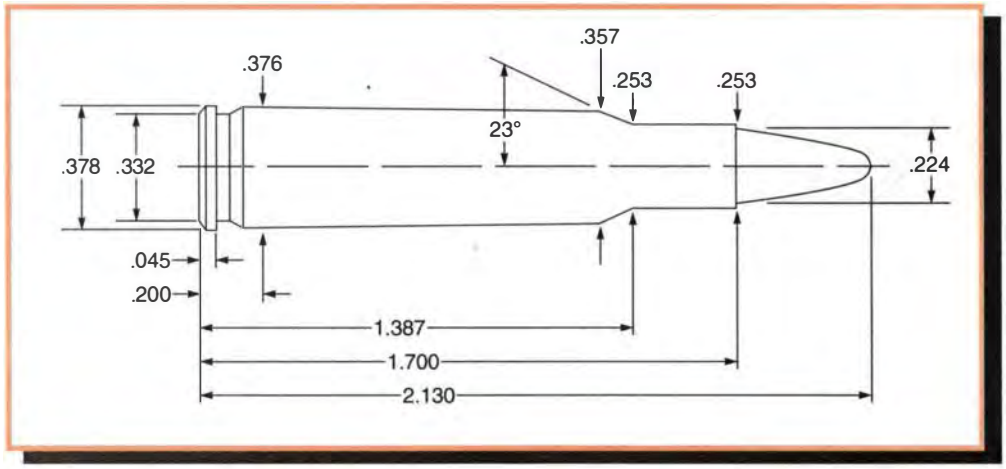


**Comments:**

Remington introduced their 222 in 1950 as an entirely new design not based on any existing case. The .378" diameter rimless cartridge constituted something entirely new to the American shooter. Its inherent accuracy helped establish the 222 Remington as a top-notch varmint cartridge which soon dethroned the older, rimmed 219 Zipper and Wasp cartridges on the Benchrest circuit. The "triple-deuce" has itself been overtaken in Benchrest by the PPC family of cartridges and has lost ground to the 223 Remington elsewhere. Despite this, the cartridge still has its die-hard followers and offers a lot to those who load for it. 50 or 55-grain bullets with a proper charge of H-322 make a potent combination out to 250 yards. Cast bullets should be cast hard, at least 15 BHN, and kept below 2300 feet per second. The 222 Remington is notable as the basis of several latter cartridges including the 222 Remington Magnum, 223 Remington, 221 Fireball, and 17 Remington along with numerous wildcats.

**Test Components:**

Cases . . . . . .Remington
Trim-to Length . . . . . .1.690"
Primers . . . . . .Remington 7½
Primer Size . . . . . .Small Rifle
Lyman Shell Holder . . . . . .No. 26
Jacketed Bullets Used . . . .Speer Sp. SP #1017, 40 gr.
Sierra SPT #1310, 45 gr.
Sierra Blitz #1340, 50 gr.
Sierra HP Match King #1400, 53 gr.
Sierra SPT #1360, 55 gr.
Hornady HP #2275, 60 gr.
Sierra SMP #1370, 63 gr.
Cast Bullets Used . . . . . .(sized to .224" dia)
*gas check bullets *#225415, 55 gr.
*#225646, 55 gr.

**Test Specifications:**
**(Velocity & Pressure)**

Firearm Used . . . . . .Universal Receiver
Barrel Length . . . . . .26"
Twist . . . . . .1-14"
Groove Dia. . . . . ..224"

**40 gr. Jacketed Sp. SP**
2.040" OAL
**BC:** .144
**SD:** .114

| Powder | Sugg Starting Grains | Velocity fps | Pressure C.U.P. | Max Load Grains | Velocity fps | Pressure C.U.P. |
|---|---|---|---|---|---|---|
| IMR-4198 | 18.0 | 2688 | 24,000 | 22.0+ | 3460 | 44,600 |
| XMR-2015 | 21.6 | 2963 | 34,800 | 24.0+ | 3277 | 45,300 |
| RX7 | 19.8 | 2919 | 29,900 | 22.0 | 3295 | 44,100 |
| IMR-3031 | 20.0 | 2283 | 19,200 | 23.5+ | 3076 | 33,500 |
| H322 | 22.1 | 2883 | 30,000 | 24.5+ | 3264 | 44,300 |
| **AA2230** | **24.5** | **3250** | 42,000 | 27.2+ | 3586 | 45,100 |
| H335 | 23.0 | 2884 | 29,400 | 25.5 | 3234 | 43,000 |
| IMR-4895 | 21.0 | 2590 | 26,400 | 25.0+ | 3125 | 36,400 |
| IMR-4064 | 21.0 | 2481 | 25,200 | 23.6+ | 2848 | 30,500 |
| IMR-4320 | 22.0 | 2583 | 27,600 | 26.0+ | 3067 | 36,900 |

**45 gr. Jacketed SPT**
2.125" OAL
**BC:** .210
**SD:** .128

| Powder | Sugg Starting Grains | Velocity fps | Pressure C.U.P. | Max Load Grains | Velocity fps | Pressure C.U.P. |
|---|---|---|---|---|---|---|
| IMR-4198 | 18.0 | 2672 | 24,600 | 21.5+ | 3333 | 45,400 |
| XMR2015 | 21.3 | 2810 | 31,800 | 23.7+ | 3152 | 44,700 |
| RX7 | 18.9 | 2896 | 32,700 | 21.0 | 3106 | 42,200 |
| IMR-3031 | 20.0 | 2538 | 27,600 | 23.5+ | 3134 | 39,400 |
| H322 | 21.6 | 2811 | 29,400 | 24.0+ | 3280 | 44,400 |
| AA2230 | 23.4 | 3037 | 41,500 | 26.0+ | 3342 | 45,500 |
| **H335** | **23.6** | **2925** | **34,200** | 26.2+ | 3234 | 45,300 |
| IMR-4895 | 21.0 | 2583 | 27,000 | 25.0+ | 3115 | 39,400 |
| IMR-4064 | 20.0 | 2331 | 24,600 | 23.6+ | 2857 | 32,000 |
| IMR-4320 | 22.0 | 2570 | 27,000 | 26.0+ | 3039 | 37,700 |

**Note:** Loads shown in shaded panels are maximum.
Loads shown in bold designate potentially most accurate load.
+Designates a compressed powder charge.

# 222 Remington

### 50 gr. Jacketed Blitz
2.125" OAL

**BC:** .222
**SD:** .142

| Powder | Sugg Starting Grains | Velocity fps | Pressure C.U.P. | Max Load Grains | Velocity fps | Pressure C.U.P. |
|---|---|---|---|---|---|---|
| IMR-4198 | 18.0 | 2717 | 28,200 | 20.5 | 3205 | 45,900 |
| XMR-2015 | 20.7 | 2875 | 32,600 | 23.9 | 3267 | 46,200 |
| RX7 | 19.4 | 2703 | 28,600 | 21.5 | 3060 | 43,900 |
| IMR-3031 | 20.0 | 2538 | 26,400 | 23.5+ | 3115 | 42,000 |
| **H322** | 21.6 | 2852 | 32,700 | **24.0+** | **3090** | **45,600** |
| H335 | 23.0 | 2797 | 33,000 | 25.5 | 3143 | 45,300 |
| IMR-4895 | 22.0 | 2762 | 31,500 | 25.0+ | 3105 | 42,400 |
| AA2460 | 21.0 | 2749 | 32,400 | 23.5 | 3050 | 43,000 |
| 748 | 22.0 | 2691 | 26,800 | 25.0+ | 3032 | 38,900 |
| IMR-4064 | 20.0 | 2314 | 23,400 | 23.6+ | 2849 | 34,000 |
| Varget | 22.5 | 2648 | 30,500 | 25.0+ | 2947 | 37,500 |
| IMR-4320 | 23.0 | 2754 | 34,000 | 26.0+ | 3048 | 42,400 |

### 53 gr. Jacketed HP Match King
2.130" OAL

**BC:** .224
**SD:** .151

| Powder | Sugg Starting Grains | Velocity fps | Pressure C.U.P. | Max Load Grains | Velocity fps | Pressure C.U.P. |
|---|---|---|---|---|---|---|
| IMR-4198 | 17.1 | 2705 | 31,700 | 19.5 | 3025 | 45,500 |
| XMR-2015 | 19.2 | 2703 | 32,200 | 22.1 | 3084 | 45,500 |
| IMR-3031 | 20.0 | 2544 | 27,600 | 23.5+ | 3039 | 41,100 |
| **H-322** | 19.8 | 2738 | 34,300 | **22.5+** | **3083** | **45,500** |
| AA2230 | 20.2 | 2601 | 29,200 | 23.5 | 3060 | 46,200 |
| H-335 | 22.1 | 2744 | 34,200 | 24.5 | 3051 | 45,600 |
| IMR-4895 | 22.0 | 2747 | 34,000 | 25.0+ | 3058 | 45,900 |
| AA2460 | 19.0 | 2410 | 23,900 | 23.6 | 3004 | 45,900 |
| 748 | 21.5 | 2651 | 29,000 | 24.5 | 3024 | 44,600 |
| IMR-4064 | 20.0 | 2341 | 25,800 | 23.6+ | 2840 | 36,900 |
| Varget | 22.1 | 2590 | 29,100 | 24.5+ | 2930 | 40,900 |
| IMR-4320 | 20.3 | 2409 | 27,800 | 23.0+ | 2807 | 39,500 |

### 55 gr. Jacketed Spt
2.130" OAL

**BC:** .237
**SD:** .157

| Powder | Sugg Starting Grains | Velocity fps | Pressure C.U.P. | Max Load Grains | Velocity fps | Pressure C.U.P. |
|---|---|---|---|---|---|---|
| IMR-4198 | 17.0 | 2538 | 27,000 | 19.5 | 2980 | 45,100 |
| XMR-2015 | 19.0 | 2605 | 26,200 | 22.1 | 3098 | 46,700 |
| IMR-3031 | 20.0 | 2531 | 28,800 | 23.5+ | 3048 | 45,400 |
| H-322 | 19.3 | 2609 | 27,800 | 22.0 | 2990 | 45,500 |
| AA-2230 | 19.6 | 2550 | 27,700 | 23.0 | 2975 | 45,900 |
| **H-335** | 21.6 | 2639 | 32,200 | **24.0** | **2974** | **44,600** |
| IMR-4895 | 20.7 | 2454 | 28,000 | 23.5+ | 2837 | 38,800 |
| AA2460 | 20.2 | 2555 | 30,200 | 23.2 | 2943 | 46,100 |
| 748 | 21.8 | 2539 | 31,000 | 24.2+ | 2885 | 44,200 |
| IMR-4064 | 20.0 | 2347 | 25,800 | 23.6+ | 2849 | 37,700 |
| Varget | 22.1 | 2651 | 31,500 | 24.5+ | 2863 | 35,700 |
| IMR-4320 | 20.2 | 2394 | 26,300 | 23.0+ | 2744 | 39,000 |

### 60 gr. Jacketed HP
2.130" OAL

**BC:** .271
**SD:** .171

| Powder | Sugg Starting Grains | Velocity fps | Pressure C.U.P. | Max Load Grains | Velocity fps | Pressure C.U.P. |
|---|---|---|---|---|---|---|
| IMR-4198 | 16.3 | 2473 | 30,000 | 18.5 | 2787 | 44,300 |
| XMR-2015 | 18.5 | 2527 | 30,300 | 21.5 | 2907 | 46,000 |
| H-322 | 19.8 | 2539 | 33,200 | 22.0 | 2818 | 45,200 |
| AA-2230 | 19.6 | 2462 | 31,000 | 23.0 | 2923 | 45,400 |
| **H-335** | 20.5 | 2528 | 31,400 | **23.0** | **2889** | **45,400** |
| IMR-4895 | 20.5 | 2469 | 32,000 | 23.0+ | 2748 | 38,700 |
| AA-2460 | 19.0 | 2366 | 30,000 | 22.1 | 2749 | 43,600 |
| 748 | 21.0 | 2423 | 32,300 | 23.0 | 2745 | 45,000 |
| IMR-40 4 | 19.5 | 2267 | 28,200 | 23.6+ | 2785 | 41,600 |
| Varget | 22.1 | 2572 | 32,000 | 24.5+ | 2830 | 42,400 |
| IMR-4320 | 21.5 | 2450 | 34,000 | 23.0+ | 2680 | 37,200 |
| RX15 | 21.2 | 2487 | 32,200 | 23.5+ | 2779 | 43,500 |

### 63 gr. Jacketed SMP
2.130" OAL

**BC:** .235
**SD:** .179

| Powder | Sugg Starting Grains | Velocity fps | Pressure C.U.P. | Max Load Grains | Velocity fps | Pressure C.U.P. |
|---|---|---|---|---|---|---|
| IMR-4198 | 17.5 | 2629 | 35,700 | 19.3 | 2798 | 43,020 |
| XMR-2015 | 17.8 | 2394 | 28,800 | 21.0 | 2836 | 45,200 |
| IMR-3031 | 19.0 | 2325 | 29,400 | 21.0+ | 2648 | 35,500 |
| H-322 | 20.3 | 2598 | 32,200 | 22.0+ | 2926 | 45,500 |
| AA-2230 | 19.0 | 2384 | 28,800 | 22.3 | 2777 | 45,400 |
| IMR-4895 | 20.0 | 2364 | 30,000 | 23.0+ | 2747 | 40,000 |
| **AA-2460** | **20.8** | **2542** | **36,700** | 23.1 | 2824 | 45,800 |
| IMR-4064 | 19.0 | 2141 | 25,200 | 23.6+ | 2785 | 40,700 |
| Varget | 22.7 | 2682 | 33,800 | 25.2+ | 2950 | 42,600 |
| RX15 | 21.8 | 2591 | 34,300 | 24.2+ | 2898 | 44,700 |

### #225415
55 gr. (#2 Alloy) 2.107" OAL

**BC:** .116
**SD:** .157

| Powder | Sugg Starting Grains | Velocity fps | Pressure C.U.P. | Max Load Grains | Velocity fps | Pressure C.U.P. |
|---|---|---|---|---|---|---|
| Red Dot | 5.1 | 1785 | 25,200 | 7.4 | 2217 | 39,000 |
| 700x | 4.7 | 1709 | 27,000 | 6.4 | 2053 | 39,900 |
| Green Dot | 5.3 | 1779 | 26,400 | 7.7 | 2232 | 40,700 |
| PB | 5.2 | 1718 | 25,800 | 7.0 | 2024 | 39,400 |
| Unique | 6.0 | 1972 | 25,800 | 8.0 | 2358 | 36,000 |
| SR-7625 | 5.7 | 1785 | 24,000 | 7.0 | 2016 | 35,500 |
| Herco | 6.5 | 1956 | 27,000 | 8.8 | 2336 | 40,700 |
| SR-4756 | 6.0 | 1769 | 21,600 | 8.7 | 2267 | 40,300 |
| 2400 | 11.0 | 2153 | 15,500 | 15.8 | 2835 | 31,300 |
| **SR-4759** | **12.2** | **2185** | **15,300** | 16.5 | 2895 | 36,700 |
| IMR-4227 | 13.0 | 2314 | 19,700 | 15.9 | 2751 | 24,200 |
| 748 | 17.0 | 2019 | 12,100 | 25.0 | 2881 | 25,400 |

**Note:** Loads shown in shaded panels are maximum.
Loads shown in bold designate potentially most accurate load.
\+ Designates a compressed powder charge.

# 222 Remington

**#225646**
55 gr. (#2 Alloy) 2.130" OAL

**BC:** .155
**SD:** .157

| Powder | Sugg Starting Grains | Velocity fps | Pressure C.U.P. | Max Load Grains | Velocity fps | Pressure C.U.P. |
|---|---|---|---|---|---|---|
| Red Dot | 5.5 | 1658 | 22,600 | 7.5 | 2033 | 38,300 |
| 700x | 5.6 | 1728 | 23,700 | 7.6 | 2109 | 42,200 |
| Green Dot | 5.9 | 1728 | 21,800 | 7.7 | 2077 | 42,100 |
| PB | 5.7 | 1639 | 21,800 | 7.5 | 1958 | 41,100 |
| Unique | 6.2 | 1754 | 21,000 | 8.0 | 2115 | 36,400 |
| SR-7625 | 5.6 | 1607 | 23,900 | 8.0 | 1988 | 41,000 |
| Herco | 6.2 | 1741 | 20,000 | 8.5 | 2172 | 39,700 |
| SR-4756 | 6.0 | 1630 | 19,000 | 8.3 | 2045 | 41,800 |
| 2400 | 10.5 | 2170 | 21,800 | 12.1 | 2436 | 35,800 |
| SR-4759 | 12.0 | 2261 | 26,200 | 14.0 | 2569 | 42,800 |
| 748 | 20.0 | 2261 | 17,100 | 26.0 | 3058 | 42,700 |

**Note:** Loads shown in shaded panels are maximum.
Loads shown in bold designate potentially most accurate load.

# 22 PPC

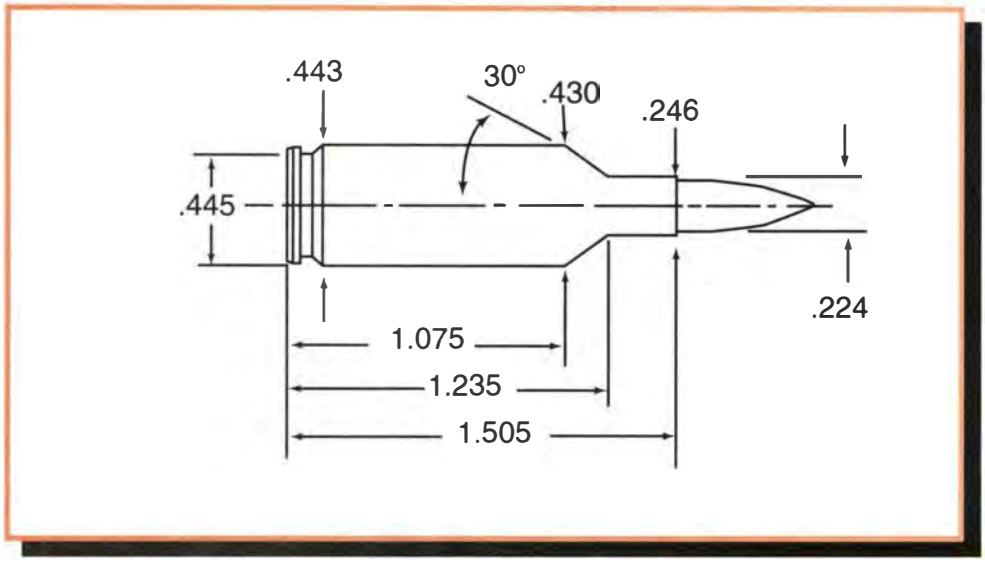


**Comments:**

The 22 PPC is the necked down version of the 6 mm PPC. It is identical to the 6mm PPC except for the cartridge neck and bullet diameters. This is without doubt the second most accurate cartridge available, being bested only by its 6mm near twin.

The PPC nomenclature is taken from the initials of its designers: Pindell, Palmisano Cartridge. It has won many benchrest shoots, but the 6mm version is the real champ in competition. This round makes a good selection for varmint shooting. Hodgdon's H322 is the single best propellant selection for jacketed bullets, though all listed types will shoot very well indeed. Match grade bullets are required to get all that this cartridge can deliver.

If you use cases other than Sako PPC, USA, approach all loads with extreme caution.

**Test Components:**

Cases . . . . . .SAKO
Trim-to Length . . . . . .1.495"
Primers . . . . . .Remington 7½
Primer Size . . . . . .Small Rifle
Lyman Shell Holder . . . . . .No. 3
Jacketed Bullets Used . . . . . .Speer HP #1030, 50 gr.
Sierra HPBT #1410, 52 gr.
Sierra SPT #1360, 55 gr.
Hornady HP #2275, 60 gr.

**Test Specifications:**
**(Velocity & Pressure)**

Firearm Used . . . . . .Universal Receiver
Barrel Length . . . . . .22"
Twist . . . . . .1-14"
Groove Dia. . . . . ..2245"

**50 gr. Jacketed HP** — 2.025" OAL — **BC:** .223 **SD:** .142

| Powder | Sugg Starting Grains | Velocity fps | Pressure C.U.P. | Max Load Grains | Velocity fps | Pressure C.U.P. |
|---|---|---|---|---|---|---|
| N-130 | 22.7 | 3030 | 35,900 | 25.3 | 3385 | 47,800 |
| IMR-4198 | 21.0 | 2959 | 31,400 | 23.0 | 3295 | 44,200 |
| XMR-2015 | 22.0 | 2991 | 29,200 | 25.5 | 3391 | 41,300 |
| H-322 | 23.0 | 3030 | 30,200 | 26.0 | 3359 | 41,200 |
| AA2230 | 25.0 | 3039 | 29,700 | 28.0 | 3388 | 41,500 |
| IMR-4895 | 25.0 | 2979 | 30,300 | 28.0+ | 3353 | 42,400 |
| BL-C(2) | 27.0 | 3051 | 32,600 | 30.0 | 3350 | 43,200 |
| 748 | 27.0 | 3028 | 29,400 | 30.0 | 3396 | 42,500 |
| **Varget** | 27.0 | 3122 | 36,600 | **30.0+** | **3456** | **46,400** |

**52 gr. Jacketed HPBT** — 2.025" OAL — **BC:** .225 **SD:** .148

| Powder | Sugg Starting Grains | Velocity fps | Pressure C.U.P. | Max Load Grains | Velocity fps | Pressure C.U.P. |
|---|---|---|---|---|---|---|
| N130 | 22.0 | 2989 | 37,500 | 24.5 | 3260 | 47,300 |
| IMR-4198 | 20.0 | 2995 | 33,000 | 23.0 | 3338 | 48,200 |
| XMR-2015 | 22.0 | 2957 | 31,200 | 25.5 | 3382 | 43,700 |
| H-322 | 23.0 | 3038 | 34,400 | 26.0 | 3369 | 45,900 |
| AA-2230 | 24.5 | 3007 | 32,600 | 27.5 | 3340 | 44,100 |
| IMR-4895 | 25.0 | 2993 | 32,200 | 28.0+ | 3378 | 47,200 |
| BL-C(2) | 27.0 | 3043 | 35,200 | 30.0 | 3335 | 46,800 |
| 748 | 27.0 | 3053 | 33,200 | 30.0 | 3405 | 45,900 |
| **Varget** | 26.1 | 3029 | 35,400 | **29.0+** | **3358** | **46,900** |

**Note:** Loads shown in shaded panels are maximum.
Loads shown in bold designate potentially most accurate load.
+Designates a compressed owder charge.

# 22 PPC

**55 gr. Jacketed SPT**
2.025" OAL
**BC:** .237
**SD:** .157

| Powder | Sugg Starting Grains | Velocity fps | Pressure C.U.P. | Max Load Grains | Velocity fps | Pressure C.U.P. |
|---|---|---|---|---|---|---|
| **N130** | **22.0** | **2934** | **37,500** | 24.5 | 3229 | 47,500 |
| IMR-4198 | 20.0 | 2979 | 35,400 | 23.0 | 3307 | 49,500 |
| XMR-2015 | 23.0 | 2914 | 31,600 | 26.0 | 3313 | 43,700 |
| H-322 | 23.0 | 3040 | 38,100 | 25.5 | 3281 | 45,400 |
| AA-2230 | 24.0 | 2854 | 30,200 | 27.5 | 3311 | 45,700 |
| IMR-4895 | 25.5 | 2923 | 32,400 | 28.5+ | 3338 | 46,300 |
| BL-C(2) | 27.5 | 3030 | 36,800 | 30.0 | 3320 | 48,600 |
| 748 | 26.5 | 2913 | 30,400 | 29.5 | 3262 | 41,700 |
| Varget | 26.1 | 2997 | 36,600 | 29.0 | 3311 | 46,200 |

**60 gr. Jacketed HP**
2.115" OAL
**BC:** .271
**SD:** .171

| Powder | Sugg Starting Grains | Velocity fps | Pressure C.U.P. | Max Load Grains | Velocity fps | Pressure C.U.P. |
|---|---|---|---|---|---|---|
| **N130** | **21.1** | **2784** | **36,700** | 23.5 | 3052 | 47,800 |
| IMR-4198 | 19.0 | 2668 | 34,200 | 22.0 | 2998 | 46,400 |
| XMR-2015 | 21.5 | 2767 | 34,000 | 25.3 | 3194 | 48,000 |
| RX7 | 19.0 | 2617 | 35,100 | 22.2 | 2920 | 45,800 |
| H-322 | 22.5 | 2814 | 37,000 | 26.0 | 3176 | 49,200 |
| AA-2230 | 23.5 | 2760 | 34,200 | 27.2 | 3162 | 46,200 |
| IMR-4895 | 23.5 | 2681 | 29,200 | 27.3 | 3187 | 48,500 |
| BL-C (2) | 24.7 | 2739 | 33,400 | 29.5 | 3205 | 48,100 |
| 748 | 25.5 | 2827 | 32,800 | 29.4 | 3184 | 45,600 |
| Varget | 25.0 | 2854 | 35,600 | 27.8 | 3167 | 47,200 |

**Note:** Loads shown in shaded panels are maximum.
Loads shown in bold designate potentially most accurate load.
+Designates a compressed powder charge.

# 222 Remington Magnum

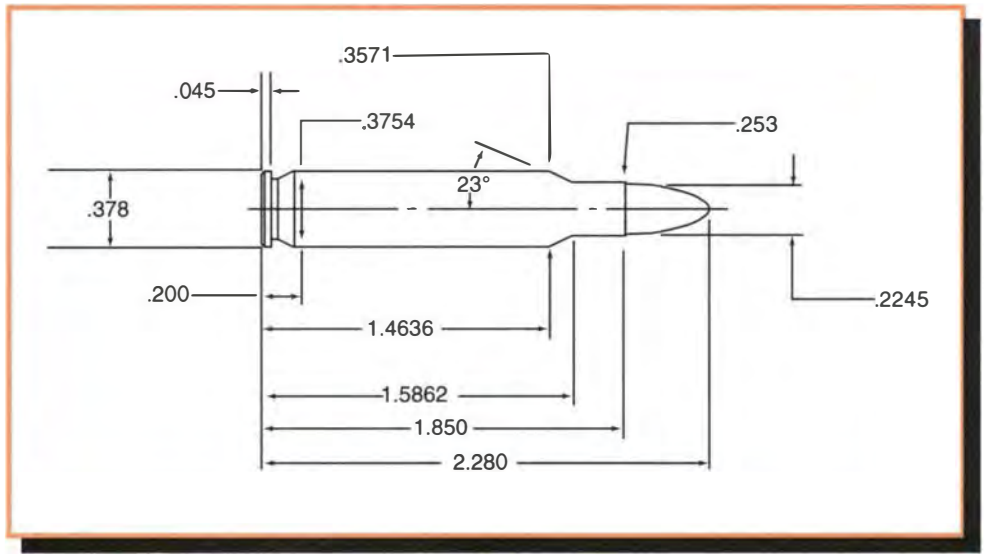


**Comments:**

This cartridge is all but obsolete, having been the forerunner to the 223 Remington. Owners of rifles chambered for both the Remington 223 and 222 Magnum cartridges must use extreme care not to use the wrong ammo in a rifle.

Powders such as IMR 4198, IMR 4895, Reloder 7, and H335 are all good choices with jacketed bullets from 52 to 60 grains.

Cast bullets driven at 2,000 to 2,300 fps. perform best, especially when lubed with Lyman Alox and gas checked.

**Test Components:**

Cases . . . . . .Remington
Trim-to Length . . . . . .1.840"
Primers . . . . . .Remington 7½
Primer Size . . . . . .Small Rifle
Lyman Shell Holder . . . . . .No. 26
Jacketed Bullets Used . . . .Speer Sp. SP #1017, 40 gr.
Sierra SPT # 1310, 45 gr.
Sierra SPT # 1330, 50 gr.
Speer HP #1035, 52 gr.
Hornady SP # 2265, 55 gr.
Sierra SMP #1370, 63 gr.
Cast Bullets Used . . . . . .(sized to .224" dia)
*gas check bullets *#225415, 55 gr.

**Test Specifications: (Velocity Only)**

Firearm Used . . . . . .Remington 700, Jacketed Bullets
Remington 722, Cast Bullets
Barrel Length . . . . . .24"
Twist . . . . . .1-14"
Groove Dia. . . . . ..224"

**40 gr. Jacketed Sp. SP**
2.200" OAL
**BC:** .144
**SD:** .114

| Powder | Sugg Starting Grains | Velocity fps | Pressure C.U.P. | Max Load Grains | Velocity fps | Pressure C.U.P. |
|---|---|---|---|---|---|---|
| IMR-4198 | 22.0 | 3322 | — | 24.5 | 3787 | — |
| RX7 | 22.0 | 3333 | — | 24.0 | 3598 | — |
| IMR-3031 | 23.0 | 3012 | — | 26.5+ | 3636 | — |
| H-335 | 26.0 | 3205 | — | 29.0 | 3597 | — |
| BL-C (2) | 26.0 | 3125 | — | 29.0 | 3497 | — |
| IMR-4895 | 25.0 | 3086 | — | 27.0+ | 3427 | — |
| IMR-4064 | 24.0 | 2754 | — | 27.0+ | 3322 | — |
| IMR-4320 | 26.0 | 3144 | — | 28.0+ | 3448 | — |

**45 gr. Jacketed SPT**
2.220" OAL
**BC:** .210
**SD:** .128

| Powder | Sugg Starting Grains | Velocity fps | Pressure C.U.P. | Max Load Grains | Velocity fps | Pressure C.U.P. |
|---|---|---|---|---|---|---|
| IMR-4198 | 22.0 | 3278 | — | 24.0 | 3663 | — |
| RX7 | 22.0 | 3236 | — | 23.5 | 3427 | — |
| IMR-3031 | 23.0 | 3039 | — | 26.5+ | 3546 | — |
| H-335 | 25.0 | 2906 | — | 28.5 | 3484 | — |
| BL-C (2) | 25.0 | 2958 | — | 28.5 | 3333 | — |
| **IMR-4895** | **24.0** | **2840** | — | 27.0+ | 3333 | — |
| IMR-4064 | 24.0 | 2739 | — | 27.0+ | 3247 | — |
| IMR-4320 | 25.0 | 2873 | — | 28.0+ | 3367 | — |

**Note:** Loads shown in shaded panels are maximum.
Loads shown in bold designate potentially most accurate load.
+Designates a compressed powder charge.

# 222 Remington Magnum

**50 gr. Jacketed SPT**
2.250" OAL
**BC:** .222
**SD:** .142

| Powder | Sugg Starting Grains | Velocity fps | Pressure C.U.P. | Max Load Grains | Velocity fps | Pressure C.U.P. |
|---|---|---|---|---|---|---|
| RX7 | 21.0 | 3030 | — | 23.0 | 3300 | — |
| IMR-3031 | 23.0 | 2967 | — | 26.5+ | 3497 | — |
| H-335 | 25.0 | 2976 | — | 28.0 | 3378 | — |
| BL-C (2) | 25.0 | 2906 | — | 28.0 | 3300 | — |
| **IMR-4895** | 24.0 | 2857 | — | **27.0+** | **3311** | — |
| IMR-4064 | 24.0 | 2770 | — | 27.0+ | 3225 | — |
| IMR-4320 | 25.0 | 2873 | — | 27.2+ | 3236 | — |

**52 gr. Jacketed HP**
2.250" OAL
**BC:** .225
**SD:** .147

| Powder | Sugg Starting Grains | Velocity fps | Pressure C.U.P. | Max Load Grains | Velocity fps | Pressure C.U.P. |
|---|---|---|---|---|---|---|
| RX7 | 20.0 | 2890 | — | 22.8 | 3268 | — |
| IMR-3031 | 23.0 | 2941 | — | 25.5+ | 3367 | — |
| H-335 | 24.0 | 2652 | — | 27.5 | 3236 | — |
| BL-C (2) | 24.0 | 2680 | — | 27.5 | 3125 | — |
| **IMR-4895** | 24.0 | 2808 | — | **27.0+** | **3279** | — |
| IMR-4064 | 24.0 | 2564 | — | 27.0+ | 3194 | — |
| IMR-4320 | 24.0 | 2754 | — | 26.2+ | 3225 | — |

**55 gr. Jacketed SP**
2.310" OAL
**BC:** .235
**SD:** .157

| Powder | Sugg Starting Grains | Velocity fps | Pressure C.U.P. | Max Load Grains | Velocity fps | Pressure C.U.P. |
|---|---|---|---|---|---|---|
| RX7 | 20.0 | 2890 | — | 22.5 | 3194 | — |
| IMR-3031 | 23.0 | 2949 | — | 25.0+ | 3290 | — |
| H-335 | 24.0 | 2793 | — | 27.2 | 3194 | — |
| BL-C (2) | 24.0 | 2724 | — | 27.0 | 3125 | — |
| **IMR-4895** | 24.0 | 2840 | — | **26.5** | **3247** | — |
| IMR-4064 | 24.0 | 2762 | — | 27.0+ | 3236 | — |
| IMR-4320 | 23.0 | 2617 | — | 25.5 | 3076 | — |

**63 gr. Jacketed SMP**
2.280" OAL
**BC:** .231
**SD:** .179

| Powder | Sugg Starting Grains | Velocity fps | Pressure C.U.P. | Max Load Grains | Velocity fps | Pressure C.U.P. |
|---|---|---|---|---|---|---|
| RX7 | 20.0 | 2816 | — | 22.0 | 3039 | — |
| IMR-3031 | 21.0 | 2659 | — | 23.0 | 2915 | — |
| H-335 | 23.0 | 2702 | — | 26.5 | 3086 | — |
| BL-C (2) | 23.0 | 2659 | — | 26.5 | 3021 | — |
| IMR-4895 | 23.0 | 2672 | — | 25.5 | 3303 | — |
| IMR-4064 | 22.0 | 2506 | — | 25.5+ | 3012 | — |
| IMR-4320 | 23.0 | 2631 | — | 24.5 | 2865 | — |

**#225415**
55 gr. (#2 Alloy) 2.150" OAL
**BC:** .116
**SD:** .157

| Powder | Sugg Starting Grains | Velocity fps | Pressure C.U.P. | Max Load Grains | Velocity fps | Pressure C.U.P. |
|---|---|---|---|---|---|---|
| Red Dot | 5.6 | 1800 | — | 9.1 | 2335 | — |
| 700X | 5.6 | 1800 | — | 8.0 | 2175 | — |
| Green Dot | 6.2 | 1870 | — | 9.2 | 2295 | — |
| PB | 6.3 | 1800 | — | 9.0 | 2190 | — |
| Unique | 6.8 | 1925 | — | 9.7 | 2325 | — |
| SR-7625 | 6.7 | 1855 | — | 9.1 | 2205 | — |

**Note:** Loads shown in shaded panels are maximum.
Loads shown in bold designate potentially most accurate load.
+Designates a compressed powder charge.

# 223 Remington

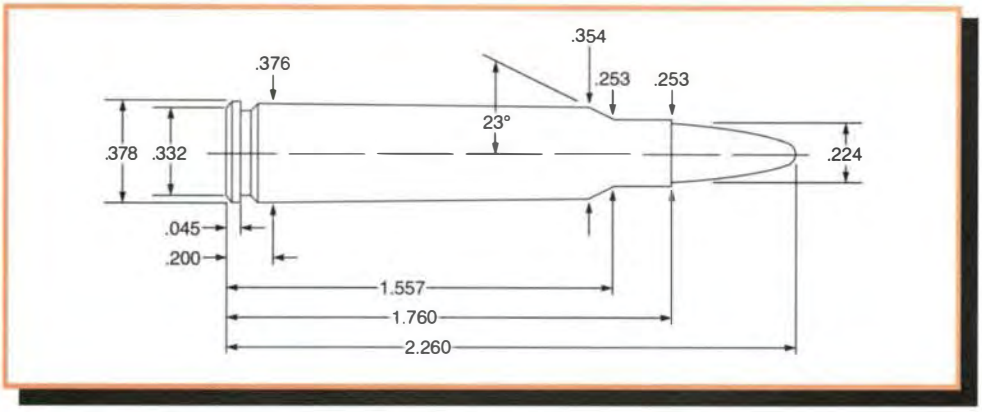


**Comments:**

The 223 Remington/5.56 NATO has become one of the most popular and versatile commercial cartridges in the United States over the last forty years. It works well with a wide number of components and is easy and economical to reload. Remington introduced this cartridge to the commercial market in 1964 soon after its adoption by the U.S. Army as the 5.56 NATO. Much like the 7.62/308 and the earlier 30-06, ready availability of surplus GI brass nurtured its popularity. The 223 Remington is similar to the older 222 Remington Magnum but is .090" shorter in length and has the shoulder set back approximately .030" Although the 223 Remington cartridges will chamber in 222 Magnum rifles, ***shooters should not fire the 223 Remington cartridge in any rifle chambered in 222 Magnum.*** The 223 Remington has been chambered for a wide variety of firearms over the years including the T/C Contender pistol. In addition to its military service, the cartridge has been used for varmints, small game and target shooting with great success along with use by law enforcement agencies. The 223 Remington should not be considered a deer cartridge. Many states mandate the 6mm/.243" bore size as the minimum caliber for whitetails.

Part of the versatility enjoyed by this cartridge revolves around the wide range of usable bullet weights. Best results with a particular bullet however requires use of a barrel with the appropriate rate of twist. This cartridge was originally introduced by different manufacturers in both 1-12" and 1-14" twist barrels. These twist rates work well for bullets weighing 40 to 55-grains. IMR-3031, H-322, H-335, 748, and XMR-2015 are all great powders in this category. This cartridge has also come a long way in recent years due to development of heavy weight bullets featuring high ballistic coefficients for long-range match competition. The introduction of 80-grain bullets by several different manufacturers allowed the AR-15/M16 series of rifles to compete head to head (shooters of the "black gun" have demonstrated) with the older 30-caliber M14/M1A rifles on the 600 yard stage of the National Match course.

Use of the 77 or 80-grain Sierra MatchKings require a 1-7" or 1-8" twist barrel for proper stabilization. The 80-grain MatchKing has a long, slender ogive and will need to be seated to an overall length longer than the 2.260" specified as maximum. The 80-grain bullet should not be seated to the 2.260" magazine length. Excessive pressures will result from the reduction in available case volume with an 80-grain bullet seated so deeply. Shooters are best advised to use a bullet length comparator (such as those made by Stoney Point) to determine distance of the bullet ogive's engagement to the lands. Bullets should be seated off the lands at least .005"–sometimes more–for best accuracy. The shooter should begin with the bullet approximately .025" off the lands and work closer to the lands of the rifling in .005" increments. This will produce a cartridge OAL around 2.550" in Colt manufactured rifles, shorter in most custom barrels. HBar rifles as manufactured by Colt have a throat approximately .100" longer than other commercially manufactured rifles. Cartridges loaded with 80-grain bullets must be loaded and fired singly. This is no handicap as the 600 yard stage is a slow fire event. These heavier bullets works best with slower burning propellants than what are usually associated with the 223 Remington. H-4895 often gives excellent accuracy with the 80-grainer while N140 and Varget also work well. The 77-grain MatchKing's ogive is more blunt and can be loaded to 2.260" magazine length as can their 69-grain MatchKing. Some shooters do report good results with 75-grain bullets in 1-9" twist barrels, while many shooters have successfully used the 52-grain Sierra MatchKing in 1-7" barrels on the reduced 200-yard course. Sierra's 69-grain MatchKing is suitable for 1-7" to 1-10" barrels.

Cast bullets velocities should be kept between 1,900 and 2,300 feet per second for best accuracy. Bullets should be cast of a hard alloy measuring at least 15 bhn such as Lyman's # 2 alloy. Bullet #225646 gave good results around 2,100 feet per second.

**Test Components:**

Cases . . . . . Remington
Trim-to Length . . . . . 1.750"
Primers . . . . . Remington 7½
Primer Size . . . . . Small Rifle
Lyman Shell Holder . . . . . No. 26
Jacketed Bullets Used . . Hornady V-Max, #22241, 40 gr.
Sierra SPT #1310, 45 gr.
Sierra Blitz #1340, 50 gr.
Sierra HPBT #1410, 52 gr.
Sierra SPT #1360, 55 gr.
Hornady V-Max #22281, 60 gr.
Sierra SMP #1370, 63 gr.
Sierra HPBT #1380, 69 gr.
Hornady A-Max #22792, 75 gr.
Sierra HPBT #9377, 77 gr.
Sierra HPBT #9390, 80 gr.
Cast Bullets Used . . . . . (sized to .224" dia.)
*gas check bullets *#225415, 55 gr.
*#225646, 55 gr.

**Test Specifications:**
**(Velocity & Pressure)**

Firearm Used . . . . . Universal Receiver
Colt AR15
Barrel Length . . . . . Universal Receiver: 24"
Colt AR15: 20"
Twist . . . . . Universal Receiver: 1-12"
Colt AR15: 1-7"
Groove Dia. . . . . .224

# 223 Remington

**40 gr. Jacketed V-Max** — 2.215" OAL — **BC:** .200 **SD:** .114

| Powder | Sugg Starting Grains | Velocity fps | Pressure C.U.P. | Max Load Grains | Velocity fps | Pressure C.U.P. |
|---|---|---|---|---|---|---|
| IMR-4198 | 20.6 | 3170 | 34,300 | 22.9 | 3545 | 46,900 |
| XMR-2015 | 24.4 | 3253 | 32,300 | 27.0 | 3760 | 49,700 |
| RX7 | 21.6 | 3163 | 32,300 | 24.0 | 3583 | 47,400 |
| IMR-3031 | 23.4 | 2957 | 31,600 | 26.0+ | 3395 | 44,500 |
| Benchmark | 25.2 | 3276 | 38,800 | 28.0+ | 3627 | 50,400 |
| H322 | 24.3 | 3095 | 32,000 | 27.0+ | 3619 | 49,000 |
| **AA-2230** | **24.3** | **3156** | **36,800** | 27.0 | 3649 | 50,200 |
| IMR-4895 | 25.0 | 3001 | 34,500 | 27.8+ | 3444 | 47,700 |
| H335 | 25.5 | 3135 | 33,200 | 28.3 | 3640 | 50,000 |
| BL-C (2) | 27.3 | 3207 | 37,800 | 30.3 | 3685 | 50,400 |
| Varget | 25.6 | 3042 | 31,000 | 28.0+ | 3383 | 38,900 |

**45 gr. Jacketed SPT** — 2.240" OAL — **BC:** .210 **SD:** .128

| Powder | Sugg Starting Grains | Velocity fps | Pressure C.U.P. | Max Load Grains | Velocity fps | Pressure C.U.P. |
|---|---|---|---|---|---|---|
| IMR-4198 | 20.6 | 3171 | 36,600 | 22.9 | 3542 | 51,800 |
| XMR-2015 | 23.8 | 3083 | 35,100 | 25.5 | 3558 | 50,900 |
| RX7 | 21.7 | 3114 | 35,000 | 24.2 | 3537 | 51,700 |
| IMR-3031 | 22.9 | 2798 | 31,200 | 25.5+ | 3346 | 46,700 |
| Benchmark | 24.7 | 3173 | 40,200 | 27.5 | 3480 | 48,700 |
| **H322** | **24.4** | **3274** | **40,300** | 27.2+ | 3571 | 50,900 |
| AA-2230 | 24.3 | 3166 | 36,600 | 27.6 | 3659 | 51,700 |
| IMR-4895 | 25.2 | 3009 | 32,600 | 28.1+ | 3420 | 47,700 |
| H335 | 26.1 | 3200 | 37,300 | 29.4 | 3678 | 51,700 |
| BL-C (2) | 26.0 | 3218 | 37,800 | 29.0 | 3641 | 51,300 |
| 748 | 27.0 | 3211 | 36,300 | 30.0 | 3592 | 47,600 |
| Varget | 25.2 | 3023 | 28,600 | 28.0+ | 3369 | 40,700 |

**50 gr. Jacketed Blitz** — 2.235" OAL — **BC:** .222 **SD:** .142

| Powder | Sugg Starting Grains | Velocity fps | Pressure C.U.P. | Max Load Grains | Velocity fps | Pressure C.U.P. |
|---|---|---|---|---|---|---|
| IMR-4198 | 20.0 | 2739 | — | 22.0 | 3115 | — |
| **XMR-2015** | **23.2** | **3069** | **32,200** | 25.0 | 3480 | 49,200 |
| RX7 | 21.7 | 3009 | 34,200 | 24.1 | 3330 | 47,600 |
| IMR-3031 | 22.0 | 2688 | — | 25.5+ | 3257 | — |
| Benchmark | 23.8 | 3043 | 36.400 | 26.5 | 3332 | 48,400 |
| AA2230 | 23.8 | 3080 | 36,800 | 26.0 | 3453 | 50,300 |
| IMR-4895 | 23.0 | 2570 | — | 26.5+ | 3115 | — |
| H335 | 24.8 | 3025 | 34,300 | 27.7 | 3459 | 51,600 |
| BL-C (2) | 24.0 | 2666 | — | 27.5 | 3076 | — |
| AA2460 | 23.9 | 2964 | 38,800 | 26.6 | 3303 | 49,900 |
| 748 | 26.1 | 2977 | 33,300 | 29.0 | 3401 | 46,500 |
| IMR-4064 | 23.0 | 2538 | — | 26.0+ | 2967 | — |
| Varget | 25.4 | 3010 | 32,800 | 28.2+ | 3376 | 45,400 |
| IMR-4320 | 24.0 | 2638 | — | 27.5 | 3134 | — |

**52 gr. Jacketed HPBT** — 2.250" OAL — **BC:** .225 **SD:** .148

| Powder | Sugg Starting Grains | Velocity fps | Pressure C.U.P. | Max Load Grains | Velocity fps | Pressure C.U.P. |
|---|---|---|---|---|---|---|
| IMR-4198 | 19.0 | 2666 | — | 21.6 | 3039 | — |
| XMR-2015 | 22.8 | 2965 | 32,300 | 25.3 | 3396 | 48,600 |
| IMR-3031 | 22.0 | 2645 | — | 25.0+ | 3125 | — |
| **Benchmark** | 23.1 | 2932 | 37,100 | **25.7** | **3251** | **49,400** |
| AA2230 | 22.9 | 2868 | 34,300 | 25.5 | 3299 | 48,800 |
| IMR-4895 | 23.0 | 2538 | — | 26.5+ | 3086 | — |
| H335 | 24.5 | 2950 | 34,200 | 27.2 | 3361 | 51,500 |
| BL-C (2) | 24.0 | 2564 | — | 27.0 | 2915 | — |
| AA2460 | 23.9 | 2907 | 39,500 | 26.5 | 3228 | 50,200 |
| 748 | 25.2 | 2974 | 36,300 | 28.0 | 3318 | 49,200 |
| IMR-4064 | 23.0 | 2512 | — | 26.0+ | 2941 | — |
| Varget | 25.6 | 3019 | 35,500 | 28.0+ | 3377 | 48,700 |
| IMR-4320 | 24.0 | 2659 | — | 27.5+ | 3125 | — |

**55 gr. Jacketed SPT** — 2.260" OAL — **BC:** .237 **SD:** .157

| Powder | Sugg Starting Grains | Velocity fps | Pressure C.U.P. | Max Load Grains | Velocity fps | Pressure C.U.P. |
|---|---|---|---|---|---|---|
| IMR-4198 | 19.0 | 2645 | — | 21.7 | 3067 | — |
| XMR-2015 | 22.5 | 2970 | 33,800 | 25.0 | 3353 | 50,800 |
| IMR-3031 | 21.0 | 2506 | — | 24.5+ | 3076 | — |
| Benchmark | 22.7 | 2793 | 33,100 | 25.3 | 3137 | 48,000 |
| AA2230 | 22.5 | 2891 | 37,000 | 25.0 | 3272 | 50,600 |
| IMR-4895 | 23.0 | 2564 | — | 26.0+ | 3030 | — |
| H335 | 24.3 | 3142 | 35,200 | 27.0 | 3270 | 49,100 |
| BL-C (2) | 23.0 | 2525 | — | 26.5 | 2949 | — |
| AA2460 | 23.7 | 2853 | 36,700 | 26.3 | 3182 | 49,900 |
| 748 | 25.0 | 2849 | 33,500 | 27.8 | 3228 | 49,600 |
| IMR-4064 | 23.0 | 2531 | — | 26.0+ | 2949 | — |
| **Varget** | **25.0** | **2977** | **34,700** | 27.8+ | 3346 | 51,400 |
| IMR-4320 | 24.0 | 2672 | — | 27.5+ | 3144 | — |

**60 gr. Jacketed V-Max** — 2.260" OAL — **BC:** .265 **SD:** .171

| Powder | Sugg Starting Grains | Velocity fps | Pressure C.U.P. | Max Load Grains | Velocity fps | Pressure C.U.P. |
|---|---|---|---|---|---|---|
| **XMR-2015** | 22.0 | 2882 | 35,500 | **24.5** | **3217** | **52,000** |
| IMR-3031 | 21.4 | 2648 | 35,000 | 23.8 | 3047 | 48,300 |
| Benchmark | 22.0 | 2678 | 34,900 | 24.5 | 3018 | 48,200 |
| AA2230 | 22.0 | 2749 | 37,300 | 24.5 | 3134 | 51,800 |
| IMR-4895 | 22.9 | 2900 | 37,300 | 25.5 | 3023 | 49,500 |
| H335 | 23.2 | 2728 | 34,700 | 25.8 | 3121 | 51,200 |
| BL-C (2) | 23.4 | 2673 | 33,200 | 26.0 | 3035 | 47,800 |
| AA-2460 | 22.5 | 2678 | 38,700 | 25.0 | 2997 | 50,600 |
| 748 | 23.4 | 2608 | 32,200 | 26.0 | 3030 | 49,400 |
| IMR-4064 | 23.8 | 2725 | 35,500 | 26.0+ | 3074 | 49,900 |
| Varget | 24.4 | 2854 | 36,300 | 27.2+ | 3170 | 49,300 |
| IMR-4320 | 23.3 | 2663 | 36,300 | 25.9 | 2995 | 49,900 |
| RX15 | 23.8 | 2783 | 36,800 | 26.5+ | 3098 | 47,300 |

**Note:** Loads shown in shaded panels are maximum.
Loads shown in bold designate potentially most accurate load.
+Designates a compressed powder charge.

# 223 Remington

### 63 gr. Jacketed SMP
2.260" OAL

**BC:** .231
**SD:** .179

| Powder | Sugg Starting Grains | Velocity fps | Pressure C.U.P. | Max Load Grains | Velocity fps | Pressure C.U.P. |
|---|---|---|---|---|---|---|
| IMR-4198 | 18.0 | 2487 | — | 20.0 | 2544 | — |
| XMR-2015 | 22.0 | 2773 | 35,100 | 24.5 | 3088 | 50,500 |
| IMR-3031 | 20.0 | 2403 | — | 22.5 | 2777 | — |
| Benchmark | 21.8 | 2648 | 34,400 | 24.3 | 2943 | 46,400 |
| **AA2230** | 23.5 | 2926 | 37,300 | **26.1** | **3250** | **50,400** |
| IMR-4895 | 22.0 | 2444 | — | 25.0 | 2865 | — |
| H335 | 23.7 | 2800 | 32,900 | 26.4 | 3139 | 48,700 |
| BL-C (2) | 23.0 | 2544 | — | 26.0 | 2840 | — |
| AA2460 | 23.4 | 2739 | 34,700 | 26.0 | 3103 | 50,400 |
| 748 | 24.7 | 2768 | 32,600 | 27.5 | 3142 | 49,300 |
| IMR-4064 | 22.0 | 2409 | — | 25.0+ | 2808 | — |
| Varget | 25.0 | 2891 | 36,000 | 27.0 | 3231 | 49,700 |
| IMR-4320 | 22.0 | 2421 | — | 25.5 | 2881 | — |
| RX15 | 24.7 | 2892 | 36,500 | 27.5 | 3210 | 51,200 |

### 69 gr. Jacketed HPBT
2.260" OAL

**BC:** .301
**SD:** .196

| Powder | Sugg Starting Grains | Velocity fps | Pressure C.U.P. | Max Load Grains | Velocity fps | Pressure C.U.P. |
|---|---|---|---|---|---|---|
| XMR-2015 | 21.6 | 2677 | 36,600 | 24.0 | 2958 | 49,000 |
| AA2230 | 22.5 | 2717 | 34,200 | 25.0 | 3063 | 48,400 |
| IMR-4895 | 22.5 | 2614 | 38,400 | 25.0 | 2896 | 50,800 |
| H335 | 22.9 | 2593 | 32,700 | 25.5 | 2994 | 51,400 |
| BL-C (2) | 23.4 | 2525 | 32,100 | 26.5 | 3018 | 50,700 |
| AA-2460 | 22.5 | 2613 | 36,400 | 25.0 | 2928 | 49,300 |
| 748 | 23.6 | 2584 | 34,500 | 26.3 | 2994 | 51,100 |
| IMR-4064 | 22.9 | 2603 | 37,100 | 25.5 | 2930 | 48,800 |
| **Varget** | 23.4 | 2654 | 33,700 | **26.0+** | **2922** | **40,500** |
| IMR-4320 | 23.9 | 2682 | 37,200 | 26.5+ | 2946 | 47,100 |
| N140 | 23.4 | 2650 | 34,300 | 26.0+ | 2926 | 45,800 |
| RX15 | 23.9 | 2721 | 36,700 | 26.5+ | 2975 | 45,000 |

### 75 gr. Jacketed A-Max
2.390" OAL

**BC:** .435
**SD:** .214

| Powder | Sugg Starting Grains | Velocity fps | Pressure C.U.P. | Max Load Grains | Velocity fps | Pressure C.U.P. |
|---|---|---|---|---|---|---|
| XMR-2015 | 20.3 | 2548 | 36,500 | 22.6 | 2797 | 49,100 |
| AA-2230 | 20.7 | 2462 | 35,300 | 23.0 | 2758 | 48,300 |
| IMR-4895 | 21.6 | 2390 | 33,800 | 24.0 | 2720 | 49,100 |
| H335 | 22.5 | 2577 | 37,000 | 25.1 | 2850 | 52,000 |
| BL-C (2) | 23.0 | 2545 | 36,300 | 25.6 | 2845 | 48,800 |
| AA-2460 | 21.6 | 2495 | 39,300 | 24.0 | 2719 | 49,200 |
| 748 | 23.0 | 2490 | 35,700 | 25.5 | 2810 | 50,600 |
| IMR-4064 | 22.2 | 2458 | 37,500 | 24.7 | 2767 | 49,000 |
| **Varget** | **23.0** | **2606** | **37,200** | 25.6 | 2843 | 48,600 |
| IMR-4320 | 22.1 | 2408 | 36,800 | 24.6 | 2724 | 50,000 |
| N140 | 22.7 | 2557 | 38,700 | 25.2 | 2773 | 49,000 |
| RX15 | 23.4 | 2652 | 39,300 | 26.1 | 2923 | 52,400 |

### 77 gr. Jacketed HPBT
2.260" OAL

**BC:** .362
**SD:** .219

| Powder | Sugg Starting Grains | Velocity fps | Pressure C.U.P. | Max Load Grains | Velocity fps | Pressure C.U.P. |
|---|---|---|---|---|---|---|
| XMR-2015 | 20.2 | 2443 | 35,000 | 22.5+ | 2724 | 48,600 |
| AA2230 | 21.7 | 2589 | 38,800 | 24.2 | 2880 | 49,600 |
| IMR-4895 | 22.0 | 2469 | 35,400 | 24.5+ | 2771 | 46,100 |
| H335 | 22.5 | 2551 | 36,500 | 25.0 | 2851 | 51,200 |
| BL-C (2) | 23.0 | 2473 | 31,600 | 24.7 | 2858 | 50,400 |
| AA-2460 | 21.9 | 2470 | 36,100 | 24.3 | 2788 | 51,000 |
| 748 | 22.6 | 2417 | 31,900 | 24.1 | 2800 | 50,300 |
| IMR-4064 | 22.5 | 2475 | 34,600 | 25.0+ | 2772 | 46,200 |
| Varget | 22.5 | 2591 | 39,000 | 25.0+ | 2788 | 44,500 |
| IMR-4320 | 22.0 | 2497 | 34,600 | 24.5+ | 2742 | 46,900 |
| N140 | 22.2 | 2463 | 35,800 | 24.7+ | 2758 | 48,500 |
| **RX15** | **22.0** | **2544** | **36,900** | 24.5+ | 2803 | 46,400 |

### 80 gr. Jacketed HPBT
2.550" OAL

**BC:** .420
**SD:** .228

| Powder | Sugg Starting Grains | Velocity fps | Pressure C.U.P. | Max Load Grains | Velocity fps | Pressure C.U.P. |
|---|---|---|---|---|---|---|
| XMR-2015 | 19.8 | 2495 | 38,200 | 22.2 | 2769 | 51,100 |
| AA-2230 | 21.5 | 2518 | 32,700 | 24.0 | 2849 | 47,500 |
| IMR-4895 | 22.0 | 2467 | 33,200 | 24.5+ | 2789 | 47,500 |
| **H4895** | 21.8 | 2536 | 36,600 | **23.2+** | **2757** | **43,700** |
| H335 | 22.5 | 2464 | 32,400 | 25.0 | 2834 | 48,600 |
| BL-C (2) | 23.4 | 2522 | 33,800 | 25.0 | 2860 | 48,600 |
| AA-2460 | 21.7 | 2467 | 33,900 | 24.1 | 2744 | 48,500 |
| 748 | 21.8 | 2443 | 31,900 | 24.0 | 2799 | 50,100 |
| IMR-4064 | 22.0 | 2451 | 33,700 | 24.0+ | 2833 | 49,500 |
| Varget | 23.0 | 2595 | 38,300 | 25.0+ | 2823 | 46,500 |
| IMR-4320 | 22.5 | 2460 | 34,000 | 25.0+ | 2777 | 48,400 |
| N140 | 22.0 | 2453 | 34,000 | 24.5+ | 2734 | 46,200 |

### *69 gr. Jacketed HPBT
2.260" OAL

**BC:** .301
**SD:** .196

| Powder | Sugg Starting Grains | Velocity fps | Pressure C.U.P. | Max Load Grains | Velocity fps | Pressure C.U.P. |
|---|---|---|---|---|---|---|
| XMR-2015 | 21.6 | 2596 | — | 24.0 | 2936 | — |
| AA-2230 | 22.5 | 2629 | — | 25.0 | 2979 | — |
| IMR-4895 | 22.5 | 2475 | — | 25.0 | 2786 | — |
| H335 | 22.9 | 2498 | — | 25.5 | 2839 | — |
| BL-C (2) | 23.4 | 2442 | — | 26.5 | 2861 | — |
| AA-2460 | 22.5 | 2511 | — | 25.0 | 2883 | — |
| 748 | 23.6 | 2468 | — | 26.3 | 2834 | — |
| IMR-4064 | 22.4 | 2344 | — | 25.5 | 2743 | — |
| **Varget** | 23.4 | 2589 | — | **26.0+** | **2832** | — |
| IMR-4320 | 23.9 | 2595 | — | 26.5+ | 2922 | — |
| N140 | 23.4 | 2581 | — | 26.0+ | 2897 | — |
| RX15 | 23.9 | 2632 | — | 26.5+ | 2933 | — |

**Note:** Loads shown in shaded panels are maximum.
Loads shown in bold designate potentially most accurate load.
+Designates a compressed owder charge.
*Fired for velocity in 20" barrel, 1-7" twist.

# 223 Remington

***77 gr. Jacketed HPBT** — 2.260" OAL — **BC:** .362 **SD:** .219

| Powder | Sugg Starting Grains | Velocity fps | Pressure C.U.P. | Max Load Grains | Velocity fps | Pressure C.U.P. |
|---|---|---|---|---|---|---|
| XMR-2015 | 20.2 | 2395 | — | 22.5 | 2680 | — |
| AA-2230 | 21.7 | 2512 | — | 24.2 | 2827 | — |
| IMR-4895 | 22.0 | 2441 | — | 24.5+ | 2721 | — |
| H335 | 22.5 | 2458 | — | 25.0 | 2821 | — |
| BL-C (2) | 23.0 | 2342 | — | 24.7 | 2745 | — |
| AA-2460 | 21.9 | 2433 | — | 24.3 | 2716 | — |
| 748 | 22.6 | 2348 | — | 24.1 | 2697 | — |
| IMR-4064 | 22.5 | 2393 | — | 25.0+ | 2736 | — |
| Varget | 22.5 | 2460 | — | 25.0+ | 2705 | — |
| IMR-4320 | 22.0 | 2334 | — | 24.5+ | 2663 | — |
| N140 | 22.2 | 2422 | — | 24.7+ | 2696 | — |
| **RX15** | **22.0** | **2472** | — | 24.5+ | 2741 | — |

***80 gr. Jacketed HPBT** — 2.550" OAL — **BC:** .420 **SD:** .228

| Powder | Sugg Starting Grains | Velocity fps | Pressure C.U.P. | Max Load Grains | Velocity fps | Pressure C.U.P. |
|---|---|---|---|---|---|---|
| XMR-2015 | 19.8 | 2348 | — | 22.2 | 2742 | — |
| AA2230 | 21.5 | 2548 | — | 24.0 | 2795 | — |
| IMR-4895 | 22.0 | 2483 | — | 24.5+ | 2669 | — |
| **H4895** | 21.8 | 2430 | — | **23.2+** | **2723** | — |
| H335 | 22.5 | 2471 | — | 25.0 | 2752 | — |
| BL-C (2) | 23.4 | 2417 | — | 25.0 | 2791 | — |
| AA-2460 | 21.7 | 2383 | — | 24.1 | 2681 | — |
| 748 | 21.8 | 2332 | — | 24.0 | 2697 | — |
| IMR-4064 | 22.0 | 2413 | — | 24.0+ | 2654 | — |
| Varget | 23.0 | 2499 | — | 25.0+ | 2761 | — |
| N140 | 22.0 | 2348 | — | 24.5+ | 2644 | — |

**#225415** — 55 gr. (#2 Alloy) 2.060" OAL — **BC:** .116 **SD:** .157

| Powder | Sugg Starting Grains | Velocity fps | Pressure C.U.P. | Max Load Grains | Velocity fps | Pressure C.U.P. |
|---|---|---|---|---|---|---|
| Red Dot | 5.6 | 1795 | 23,400 | 9.0 | 2280 | 40,700 |
| 700X | 5.6 | 1790 | 23,400 | 7.7 | 2080 | 39,400 |
| Green Dot | 6.2 | 1855 | 23,400 | 9.2 | 2270 | 39,000 |
| PB | 6.3 | 1775 | 24,000 | 8.7 | 2120 | 39,400 |
| Unique | 6.8 | 1900 | 20,400 | 9.5 | 2300 | 35,000 |
| SR-7625 | 6.6 | 1820 | 24,000 | 8.8 | 2120 | 39,900 |
| SR-4759 | 9.3 | 1762 | 18,000 | 11.3 | 2195 | 24,200 |
| **XMP-5744** | **11.0** | **1765** | **18,000** | 14.5 | 2234 | 26,600 |
| IMR-4227 | 11.0 | 1762 | 18,000 | 14.0 | 2193 | 23,200 |

**#225646** — 55 gr. (#2 Alloy) 2.260" OAL — **BC:** .155 **SD:** .157

| Powder | Sugg Starting Grains | Velocity fps | Pressure C.U.P. | Max Load Grains | Velocity fps | Pressure C.U.P. |
|---|---|---|---|---|---|---|
| Unique | 6.2 | 1753 | 26,700 | 9.0 | 2209 | 41,400 |
| SR-7625 | 6.7 | 1763 | 26,800 | 9.5 | 2205 | 43,900 |
| AA9 | 7.8 | 1749 | 17,500 | 11.0 | 2198 | 28,900 |
| 2400 | 8.0 | 1753 | 18,000 | 11.5 | 2206 | 27,100 |
| SR-4759 | 8.5 | 1751 | 17,500 | 11.5 | 2206 | 27,300 |
| XMP-5744 | 10.3 | 1757 | 17,000 | 14.0 | 2186 | 27,000 |
| IMR-4227 | 10.0 | 1766 | 17,000 | 13.0 | 2180 | 26,200 |
| AA-1680 | 10.9 | 1756 | 16,000 | 14.3 | 2181 | 23,500 |
| IMR-4198 | 10.7 | 1756 | 17,000 | 14.5 | 2223 | 25,200 |
| **RX7** | **11.5** | **1758** | **17,000** | 15.6 | 2226 | 25,300 |

**Note:** Loads shown in shaded panels are maximum.
Loads shown in bold designate potentially most accurate load.
*Fired for velocity in 20" barrel, 1–7" twist.

# 225 Winchester

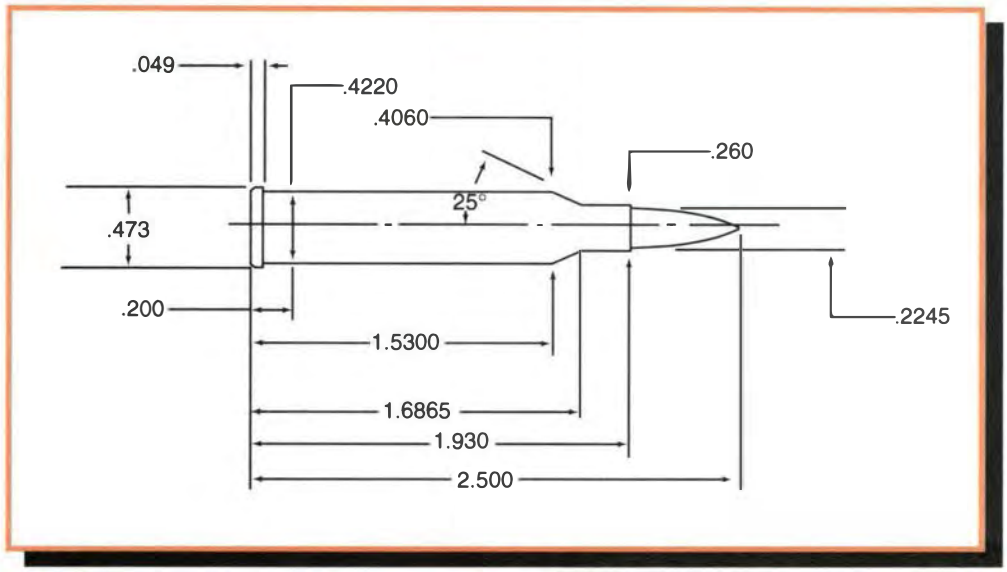


**Comments:**

Winchester announced their 225 Winchester in 1964 as a replacement for the 220 Swift. Remington's simultaneous introduction of the long popular 22-250 wildcat as a factory offering grabbed the shooting public's attention and the 225 never really took off. Ironically, the Swift has made a comeback while many Model 70s chambered in 225 have been re-barreled to other calibers. Although given up for dead as a commercial cartridge, the 225 Winchester has served as the parent case for several wildcats in recent years. The 225 is a semi-rimmed case but it headspaces on the shoulder. Those loading for this cartridge should be served well by bullets weighing between 50 and 55-grains with IMR-4064 or IMR-4320.

**Test Components:**

Cases . . . . . .Winchester
Trim-to Length . . . . . .1.920"
Primers . . . . . .WLR
Primer Size . . . . . .Large Rifle
Lyman Shell Holder . . . . . .No. 5
Jacketed Bullets Used . . .Speer Spire SP #1017, 40 gr.
Sierra SPT #1310, 45 gr.
Sierra SPT #1340, 50 gr.
Speer HP #1035, 52 gr.
Hornady SP #2265, 55 gr.
Sierra SMP #1370, 63 gr.
Cast Bullets Used . . . . . .(sized to .224" dia)
*gas check bullets *#225415, 55 gr.

**Test Specifications: (Velocity Only)**

Firearm Used . . . . . .Winchester Model 70
Barrel Length . . . . . .22"
Twist . . . . . .1-14"
Groove Dia. . . . . ..224"

**40 gr. Jacketed SP** — 2.370" OAL — **BC:** .144 **SD:** .114

| Powder | Sugg Starting Grains | Velocity fps | Pressure C.U.P. | Max Load Grains | Velocity fps | Pressure C.U.P. |
|---|---|---|---|---|---|---|
| IMR-4198 | 23.0 | 3086 | — | 26.0 | 3484 | — |
| **IMR-3031** | 26.0 | 3086 | — | **29.0** | **3497** | — |
| IMR-4895 | 27.0 | 2849 | — | 30.0 | 3268 | — |
| IMR-4064 | 31.0 | 3333 | — | 34.0 | 3846 | — |
| IMR-4320 | 29.0 | 3067 | — | 31.0 | 3345 | — |
| H-380 | 34.0 | 3356 | — | 38.0+ | 3786 | — |

**45 gr. Jacketed SPT** — 2.390" OAL — **BC:** .210 **SD:** .128

| Powder | Sugg Starting Grains | Velocity fps | Pressure C.U.P. | Max Load Grains | Velocity fps | Pressure C.U.P. |
|---|---|---|---|---|---|---|
| IMR-4198 | 22.0 | 2865 | — | 25.0 | 3215 | — |
| IMR-3031 | 25.0 | 2849 | — | 28.0 | 3257 | — |
| IMR-4895 | 26.0 | 2710 | — | 29.0 | 3144 | — |
| IMR-4064 | 30.0 | 3164 | — | 33.5 | 3745 | — |
| **IMR-4320** | 28.0 | 2857 | — | **31.0** | **3300** | — |
| H-380 | 33.0 | 3184 | — | 37.5+ | 3571 | — |

**Note:** Loads shown in shaded panels are maximum.
Loads shown in bold designate potentially most accurate load.
+Designates a compressed powder charge.

# 225 Winchester

**50 gr. Jacketed SPT**
2.400" OAL
**BC:** .222
**SD:** .142

| Powder | Sugg Starting Grains | Velocity fps | Pressure C.U.P. | Max Load Grains | Velocity fps | Pressure C.U.P. |
|---|---|---|---|---|---|---|
| IMR-4198 | 21.0 | 2710 | — | 23.0 | 2941 | — |
| IMR-3031 | 25.0 | 2865 | — | 28.0 | 3225 | — |
| IMR-4895 | 26.0 | 2732 | — | 29.0 | 3125 | — |
| IMR-4064 | 30.0 | 3174 | — | 33.0 | 3636 | — |
| **IMR-4320** | 27.0 | 2808 | — | **30.0** | **3194** | — |
| H-380 | 33.0 | 3174 | — | 37.0+ | 3497 | — |

**52 gr. Jacketed HP**
2.500" OAL
**BC:** .225
**SD:** .147

| Powder | Sugg Starting Grains | Velocity fps | Pressure C.U.P. | Max Load Grains | Velocity fps | Pressure C.U.P. |
|---|---|---|---|---|---|---|
| IMR-4198 | 20.0 | 2645 | — | 22.5 | 2906 | — |
| IMR-3031 | 24.0 | 2793 | — | 27.0 | 3030 | — |
| IMR-4895 | 25.0 | 2666 | — | 28.0 | 3012 | — |
| IMR-4064 | 29.0 | 3067 | — | 32.5 | 3610 | — |
| **IMR-4320** | 26.0 | 2710 | — | **29.0** | **3048** | — |
| H-380 | 32.0 | 3076 | — | 36.5+ | 3436 | — |

**55 gr. Jacketed SP**
2.420" OAL
**BC:** .235
**SD:** .157

| Powder | Sugg Starting Grains | Velocity fps | Pressure C.U.P. | Max Load Grains | Velocity fps | Pressure C.U.P. |
|---|---|---|---|---|---|---|
| IMR-4198 | 20.0 | 2638 | — | 22.0 | 2857 | — |
| IMR-3031 | 23.0 | 2652 | — | 26.0 | 2976 | — |
| IMR-4895 | 25.0 | 2659 | — | 28.0 | 2976 | — |
| **IMR-4064** | 29.0 | 3048 | — | **32.0** | **3534** | — |
| IMR-4320 | 25.0 | 2610 | — | 28.0 | 2906 | — |
| H-380 | 32.0 | 3039 | — | 36.0+ | 3401 | — |

**63 gr. Jacketed SMP**
2.440" OAL
**BC:** .231
**SD:** .179

| Powder | Sugg Starting Grains | Velocity fps | Pressure C.U.P. | Max Load Grains | Velocity fps | Pressure C.U.P. |
|---|---|---|---|---|---|---|
| IMR-4198 | 19.0 | 2487 | — | 21.0 | 2695 | — |
| IMR-3031 | 22.0 | 2544 | — | 25.0 | 2849 | — |
| IMR-4895 | 24.0 | 2557 | — | 27.0 | 2832 | — |
| IMR-4064 | 28.0 | 2923 | — | 31.5 | 3378 | — |
| **IMR-4320** | 24.0 | 2518 | — | **27.0** | **2816** | — |
| H-380 | 31.0 | 2915 | — | 35.0 | 3215 | — |

**#225415**
55 gr. (#2 Alloy) 2.235" OAL
**BC:** .116
**SD:** .157

| Powder | Sugg Starting Grains | Velocity fps | Pressure C.U.P. | Max Load Grains | Velocity fps | Pressure C.U.P. |
|---|---|---|---|---|---|---|
| Red Dot | 6.0 | 1770 | — | 9.0 | 2235 | — |
| **700X** | **6.0** | **1775** | — | 9.0 | 2185 | — |
| Green Dot | 6.5 | 1845 | — | 9.5 | 2280 | — |
| PB | 6.5 | 1760 | — | 9.5 | 2170 | — |
| Unique | 7.0 | 1880 | — | 10.0 | 2315 | — |
| SR-7625 | 7.0 | 1825 | — | 10.0 | 2195 | — |

**Note:** Loads shown in shaded panels are maximum.
Loads shown in bold designate potentially most accurate load.
+Designates a compressed powder charge.

# 224 Weatherby Magnum

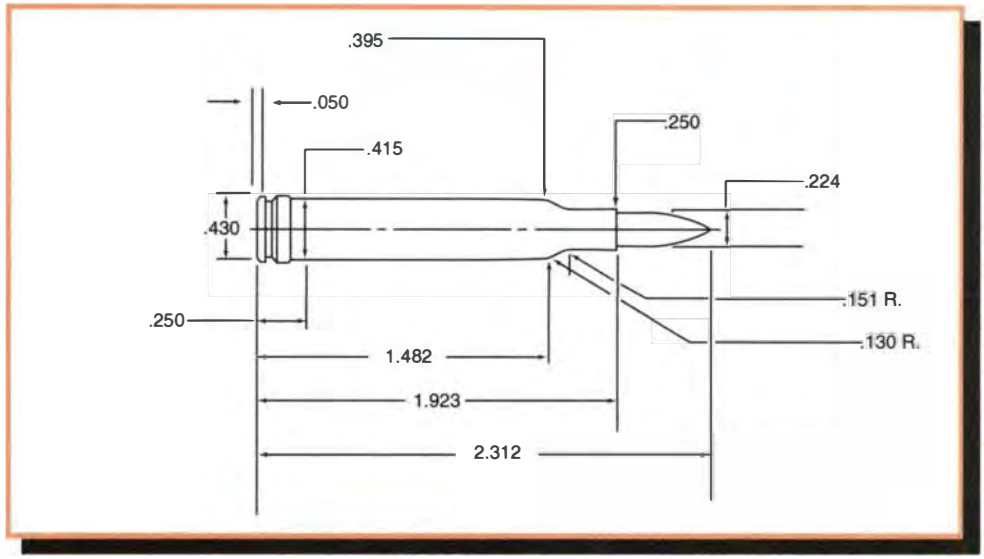


**Comments:**

This is a very accurate cartridge which has never gained a great deal of popularity. Perhaps this is due to the fact that only Weatherby rifles have generally been chambered for the round and only Weatherby supplies ammo or brass. Do not use magnum style primers with this case as dangerous pressures will result. Jacketed bullets of 50 to 60 grains are the best choices. Use only bullets designed for high velocities to prevent premature bullet break up. Our recommended powder choice is IMR-4198.

**Test Components:**

Cases . . . . . .Weatherby
Trim-to Length . . . . . .1.915"
Primers . . . . . .Remington 9½
Primer Size . . . . . .Large Rifle
Lyman Shell Holder . . . . . .No. 3
Jacketed Bullets Used . . .Speer Spire SP #1017, 40 gr.
Sierra SPT #1310, 45 gr.
Sierra SPT #1340, 50 gr.
Speer HP #1035, 52 gr.
Hornady V-Max #22271, 55 gr.
Sierra SMP #1370, 63 gr.

**Test Specifications:**
**(Velocity Only)**

Firearm Used . . . . . .Weatherby Varmint Master
Barrel Length . . . . . .26"
Twist . . . . . .1-14"
Groove Dia. . . . . ..224"

**40 gr. Jacketed SP**
2.310" OAL
**BC:** .144
**SD:** .114

| Powder | Sugg Starting Grains | Velocity fps | Pressure C.U.P. | Max Load Grains | Velocity fps | Pressure C.U.P. |
|---|---|---|---|---|---|---|
| **IMR-4198** | **25.0** | **3521** | — | 28.5 | 4098 | — |
| IMR-3031 | 29.0 | 3597 | — | 32.5+ | 4149 | — |
| IMR-4895 | 30.0 | 3497 | — | 33.5+ | 4000 | — |
| IMR-4064 | 30.0 | 3448 | — | 33.0+ | 3875 | — |
| IMR-4320 | 32.0 | 3663 | — | 35.0+ | 4115 | — |

**45 gr. Jacketed SPT**
2.310" OAL
**BC:** .210
**SD:** .128

| Powder | Sugg Starting Grains | Velocity fps | Pressure C.U.P. | Max Load Grains | Velocity fps | Pressure C.U.P. |
|---|---|---|---|---|---|---|
| **IMR-4198** | **25.0** | **3448** | — | 28.0 | 3891 | — |
| IMR-3031 | 29.0 | 3584 | — | 32.0+ | 3984 | — |
| IMR-4895 | 30.0 | 3546 | — | 33.0+ | 3875 | — |
| IMR-4064 | 30.0 | 3460 | — | 33.0+ | 3816 | — |
| IMR-4320 | 31.0 | 3509 | — | 34.5+ | 3891 | — |

**Note:** Loads shown in shaded panels are maximum.
Loads shown in bold designate potentially most accurate load.
+Designates a compressed powder charge.

# 224 Weatherby Magnum

**50 gr. Jacketed SPT**
2.310" OAL
**BC:** .222
**SD:** .142

| Powder | Sugg Starting Grains | Velocity fps | Pressure C.U.P. | Max Load Grains | Velocity fps | Pressure C.U.P. |
|---|---|---|---|---|---|---|
| **IMR-4198** | 24.0 | 3247 | — | **27.5** | **3708** | — |
| IMR-3031 | 28.0 | 3356 | — | 31.5+ | 3831 | — |
| IMR-4895 | 29.0 | 3322 | — | 32.5+ | 3745 | — |
| IMR-4064 | 30.0 | 3484 | — | 33.0+ | 3802 | — |
| IMR-4320 | 31.0 | 3460 | — | 34.0+ | 3802 | — |

**52 gr. Jacketed HP**
2.310" OAL
**BC:** .225
**SD:** .147

| Powder | Sugg Starting Grains | Velocity fps | Pressure C.U.P. | Max Load Grains | Velocity fps | Pressure C.U.P. |
|---|---|---|---|---|---|---|
| **IMR-4198** | **24.0** | **3215** | — | 27.0 | 3623 | — |
| IMR-3031 | 28.0 | 3356 | — | 31.0+ | 3773 | — |
| IMR-4895 | 29.0 | 3247 | — | 32.0+ | 3650 | — |
| IMR-4064 | 30.0 | 3413 | — | 33.0+ | 3759 | — |
| IMR-4320 | 30.0 | 3322 | — | 33.5+ | 3717 | — |

**55 gr. Jacketed V-Max**
2.350" OAL
**BC:** .255
**SD:** .157

| Powder | Sugg Starting Grains | Velocity fps | Pressure C.U.P. | Max Load Grains | Velocity fps | Pressure C.U.P. |
|---|---|---|---|---|---|---|
| IMR-4198 | 23.0 | 3095 | — | 26.5 | 3509 | — |
| IMR-3031 | 27.0 | 3225 | — | 30.5+ | 3677 | — |
| IMR-4895 | 28.0 | 3164 | — | 31.5 | 3597 | — |
| **IMR-4064** | 29.0 | 3279 | — | **32.8+** | **3717** | — |
| IMR-4320 | 30.0 | 3311 | — | 33.0+ | 3650 | — |

**63 gr. Jacketed SMP**
2.310" OAL
**BC:** .231
**SD:** .179

| Powder | Sugg Starting Grains | Velocity fps | Pressure C.U.P. | Max Load Grains | Velocity fps | Pressure C.U.P. |
|---|---|---|---|---|---|---|
| **IMR-4198** | **23.0** | **2967** | — | 26.0 | 3356 | — |
| IMR-3031 | 26.0 | 3039 | — | 29.5 | 3472 | — |
| IMR-4895 | 27.0 | 3003 | — | 30.5 | 3413 | — |
| IMR-4064 | 29.0 | 3247 | — | 32.0+ | 3559 | — |
| IMR-4320 | 29.0 | 3144 | — | 32.0+ | 3484 | — |

**Note:** Loads shown in shaded panels are maximum.
Loads shown in bold designate potentially most accurate load.
+Designates a compressed powder charge.

# 22-250 Remington

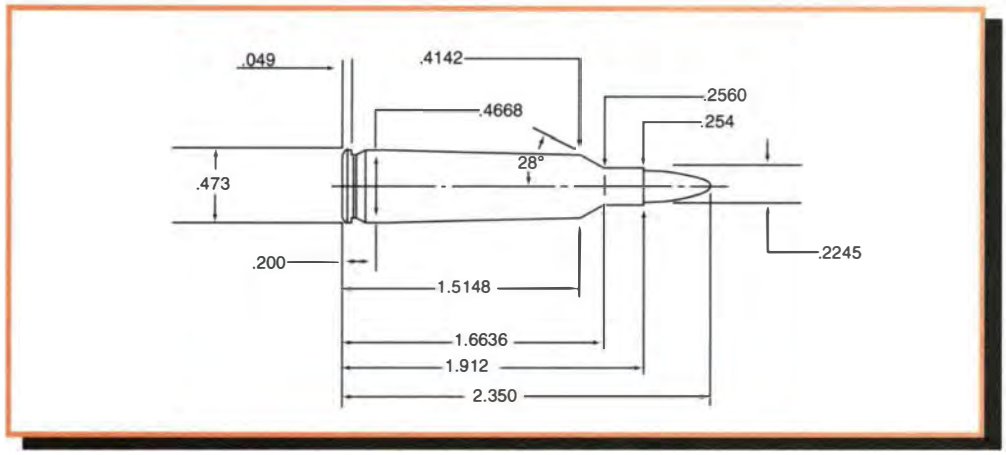


**Comments:**

This is one of the best choices for a long range 22 caliber varmint rifle. Accuracy is generally excellent and its flat trajectory makes hitting small targets easier - even up to 300 yards.

Jacketed bullets of 50 grains or heavier are best. First recommendation on powder would be Hodgdon H380. In fact, a charge of 38.0 grains with a 55 grain bullet has become legendary. It began when Bruce Hodgdon first tried it and found it so accurate that he named the powder after the 38.0 grain charge - H380.

The data listed are intended only for standard chambers as manufactured to current industry specifications. Early chambers marked 22-250 or Varminter may differ from current standards by a substantial amount, to the point that this data may prove unsafe in such firearms.

Cast bullet #225646 at about 2,100 fps. is the best choice for lead bullet use in this cartridge, as it is in several other 22 caliber cartridges.

**Test Components:**

Cases . . . . . .Winchester
Trim-to Length . . . . . .1.902"
Primers . . . . . .WLR
Primer Size . . . . . .Large Rifle
Lyman Shell Holder . . . . . .No. 2
Jacketed Bullets Used .Hornady V-Max #22241, 40 gr.
Sierra SPT #1310, 45 gr.
Sierra Blitz #1340, 50 gr.
Hornady A-Max #22492, 52 gr.
Hornady V-Max #22271, 55 gr.
Hornady HP #2275, 60 gr.
Sierra SMP 1370, 63 gr.
Cast Bullets Used . . . . . .(sized to .224" dia)
*gas check bullets *#225415, 55 gr.
*#225646, 55 gr.

**Test Specifications:**
**(Velocity & Pressure)**

Firearm Used . . . . . .Universal Receiver
Barrel Length . . . . . .24"
Twist . . . . . .1-14"
Groove Dia. . . . . ..224"

**40 gr. Jacketed V-Max** — 2.350" OAL — **BC:** .200 **SD:** .114

| Powder | Sugg Starting Grains | Velocity fps | Pressure C.U.P. | Max Load Grains | Velocity fps | Pressure C.U.P. |
|---|---|---|---|---|---|---|
| RX7 | 29.0 | 3709 | 39,400 | 33.0 | 4130 | 52,800 |
| IMR-3031 | 32.5 | 3367 | 32,800 | 36.0 | 3982 | 50,500 |
| AA-2230 | 33.3 | 3510 | 34,500 | 37.0 | 4106 | 50,900 |
| IMR-4895 | 34.2 | 3402 | 35,500 | 37.0 | 3919 | 51,300 |
| AA-2460 | 34.7 | 3496 | 35,700 | 38.0 | 3981 | 49,600 |
| **IMR-4064** | 34.7 | 3365 | 34,300 | **38.5+** | **3920** | **49,900** |
| Varget | 36.0 | 3690 | 38,600 | 40.0 | 4130 | 52,000 |
| IMR-4320 | 34.0 | 3566 | 41,600 | 38.5 | 4003 | 53,200 |
| N140 | 35.6 | 3552 | 37,600 | 39.0 | 3953 | 49,900 |
| RX15 | 34.5 | 3493 | 36,000 | 38.0+ | 4017 | 50,800 |
| H380 | 38.2 | 3394 | 32,300 | 42.0+ | 3770 | 51,900 |
| IMR-4350 | 36.0 | 2992 | 28,800 | 40.0+ | 3458 | 39,000 |

**45 gr. Jacketed SPT** — 2.310" OAL — **BC:** .210 **SD:** .128

| Powder | Sugg Starting Grains | Velocity fps | Pressure C.U.P. | Max Load Grains | Velocity fps | Pressure C.U.P. |
|---|---|---|---|---|---|---|
| IMR-3031 | 31.0 | 3545 | 40,300 | 35.5 | 3965 | 50,800 |
| AA-2230 | 33.3 | 3512 | 35,800 | 36.5 | 3973 | 49,100 |
| IMR-4895 | 32.5 | 3353 | 36,400 | 36.5 | 3901 | 52,000 |
| AA-2460 | 34.0 | 3486 | 37,400 | 37.2 | 3899 | 51,500 |
| IMR-4064 | 33.0 | 3373 | 34,500 | 37.5+ | 3945 | 52,400 |
| Varget | 36.0 | 3538 | 36,400 | 39.5+ | 3982 | 51,300 |
| IMR-4320 | 33.0 | 3390 | 38,600 | 37.5 | 3836 | 50,000 |
| N140 | 35.0 | 3424 | 35,500 | 38.5 | 3887 | 51,800 |
| **RX15** | 33.6 | 3465 | 35,300 | **37.0** | **3947** | **51,500** |
| H380 | 37.0 | 3741 | 41,100 | 41.0 | 4055 | 51,600 |
| IMR-4350 | 36.0 | 3239 | 33,500 | 40.0+ | 3613 | 43,300 |
| **SR-4759 | 15.0 | 2476 | 24,700 | 19.5 | 3052 | 33,700 |
| **XMP-5744 | 18.0 | 2436 | 23,200 | 23.5 | 3007 | 30,900 |

**Note:** Loads shown in shaded panels are maximum.
Loads shown in bold designate potentially most accurate load.

+Designates a compressed powder charge.
**Designates a reduced load.

# 22-250 Remington

### 50 gr. Jacketed Blitz
2.310" OAL

**BC:** .222
**SD:** .142

| Powder | Sugg Starting Grains | Velocity fps | Pressure C.U.P. | Max Load Grains | Velocity fps | Pressure C.U.P. |
|---|---|---|---|---|---|---|
| RX7 | 28.0 | 3478 | 41,100 | 31.5 | 3779 | 52,400 |
| XMR-2015 | 29.7 | 3229 | 37,000 | 34.0 | 3716 | 50,600 |
| IMR-3031 | 30.0 | 3181 | 33,000 | 35.3 | 3861 | 52,400 |
| AA2230 | 31.8 | 3290 | 40,500 | 35.4 | 3626 | 47,000 |
| **IMR-4895** | **33.5** | **3230** | **34,800** | 37.0+ | 3704 | 50,900 |
| AA-2460 | 31.4 | 3154 | 37,300 | 36.2 | 3693 | 52,400 |
| 748 | 34.3 | 3391 | 36,800 | 39.0 | 3811 | 50,700 |
| IMR-4064 | 32.0 | 3210 | 32,000 | 37.0+ | 3854 | 52,400 |
| AA-2520 | 32.5 | 3319 | 39,100 | 37.0 | 3724 | 51,200 |
| IMR-4320 | 33.0 | 3408 | 40,700 | 37.0 | 3742 | 51,200 |
| H-380 | 36.0 | 3569 | 39,400 | 40.0 | 3912 | 52,000 |
| N150 | 33.6 | 3433 | 37,400 | 37.5+ | 3814 | 49,800 |
| H414 | 37.8 | 3200 | 36,500 | 41.5+ | 3693 | 50,100 |
| IMR-4350 | 36.0 | 3182 | 34,000 | 40.0+ | 3591 | 45,000 |

### 52 gr. Jacketed A-Max
2.350" OAL

**BC:** .247
**SD:** .148

| Powder | Sugg Starting Grains | Velocity fps | Pressure C.U.P. | Max Load Grains | Velocity fps | Pressure C.U.P. |
|---|---|---|---|---|---|---|
| RX7 | 27.0 | 3333 | 39,900 | 31.2 | 3561 | 52,200 |
| XMR-2015 | 28.9 | 3151 | 36,900 | 33.8 | 3631 | 52,000 |
| IMR-3031 | 31.7 | 3206 | 34,000 | 35.2 | 3692 | 50,800 |
| AA-2230 | 31.0 | 3330 | 35,500 | 34.0 | 3789 | 50,100 |
| IMR-4895 | 32.6 | 3157 | 34,000 | 36.2 | 3604 | 50,000 |
| AA-2460 | 32.4 | 3285 | 37,200 | 35.0 | 3648 | 50,900 |
| IMR-4064 | 32.3 | 3123 | 33,500 | 36.0 | 3657 | 51,200 |
| **Varget** | 33.5 | 3367 | 37,400 | **38.0** | **3764** | **50,500** |
| IMR-4320 | 32.0 | 3153 | 36,400 | 36.7 | 3645 | 51,200 |
| RX15 | 32.3 | 3239 | 35,200 | 36.0 | 3666 | 48,900 |
| H380 | 36.9 | 3218 | 34,200 | 41.0+ | 3584 | 43,800 |
| N150 | 33.0 | 3414 | 40,900 | 37.0 | 3794 | 52,400 |
| 760 | 37.8 | 3267 | 37,300 | 41.0+ | 3701 | 51,300 |
| IMR-4350 | 36.0 | 3024 | 32,600 | 40.0+ | 3396 | 45,000 |

### 55 gr. Jacketed V-Max
2.345" OAL

**BC:** .255
**SD:** .157

| Powder | Sugg Starting Grains | Velocity fps | Pressure C.U.P. | Max Load Grains | Velocity fps | Pressure C.U.P. |
|---|---|---|---|---|---|---|
| XMR-2015 | 29.0 | 3131 | 38,300 | 33.9 | 3602 | 52,500 |
| AA2230 | 31.1 | 3096 | 37,400 | 35.0 | 3536 | 51,000 |
| IMR-4895 | 32.0 | 3152 | 34,500 | 35.5 | 3576 | 50,200 |
| AA2460 | 30.0 | 3298 | 39,800 | 34.8 | 3588 | 49,500 |
| IMR-4064 | 32.0 | 3221 | 36,200 | 35.5 | 3634 | 51,500 |
| Varget | 34.0 | 3325 | 39,100 | 37.0 | 3696 | 51,600 |
| AA-2520 | 32.0 | 3276 | 41,900 | 36.0 | 3613 | 51,800 |
| IMR-4320 | 32.0 | 3163 | 36,400 | 36.5 | 3630 | 52,000 |
| RX15 | 31.7 | 3306 | 38,500 | 35.5 | 3694 | 51,400 |
| H380 | 36.9 | 3213 | 36,900 | 41.0+ | 3553 | 47,000 |
| **N150** | 32.7 | 3343 | 42,400 | **36.5** | **3663** | **51,900** |
| IMR-4350 | 36.0 | 3021 | 33,500 | 40.0+ | 3368 | 43,900 |
| **SR-4759 | 16.0 | 2472 | 28,900 | 20.0 | 2933 | 42,700 |
| **XMP-5744 | 18.5 | 2406 | 25,000 | 24.5 | 3034 | 36,800 |

### 60 gr. Jacketed HP
2.350" OAL

**BC:** .271
**SD:** .171

| Powder | Sugg Starting Grains | Velocity fps | Pressure C.U.P. | Max Load Grains | Velocity fps | Pressure C.U.P. |
|---|---|---|---|---|---|---|
| XMR-2015 | 27.2 | 2936 | 37,100 | 32.4 | 3460 | 53,000 |
| AA2230 | 30.1 | 2973 | 37,900 | 34.8 | 3460 | 52,400 |
| IMR-4895 | 33.0 | 3141 | 36,300 | 36.0+ | 3581 | 51,500 |
| AA2460 | 28.9 | 2859 | 34,600 | 35.0 | 3467 | 52,100 |
| IMR-4064 | 31.0 | 3128 | 36,400 | 35.5 | 3589 | 52,000 |
| Varget | 32.5 | 3165 | 37,700 | 36.0 | 3493 | 48,800 |
| AA2520 | 29.8 | 2882 | 35,700 | 34.7 | 3392 | 52,300 |
| IMR-4320 | 31.0 | 3064 | 37,300 | 36.0+ | 3503 | 51,600 |
| RX15 | 31.8 | 3242 | 39,600 | 35.0 | 3610 | 51,100 |
| H-380 | 34.5 | 3362 | 44,200 | 38.0 | 3622 | 52,400 |
| **N150** | 32.0 | 3186 | 40,400 | **35.5** | **3507** | **50,800** |
| H-414 | 35.4 | 3136 | 38,400 | 38.5+ | 3540 | 51,700 |
| IMR-4350 | 36.0 | 3136 | 38,600 | 40.0+ | 3497 | 50,400 |
| RX19 | 36.9 | 2922 | 34,000 | 41.0+ | 3268 | 44,600 |

### 63 gr. Jacketed SMP
2.350" OAL

**BC:** .231
**SD:** .179

| Powder | Sugg Starting Grains | Velocity fps | Pressure C.U.P. | Max Load Grains | Velocity fps | Pressure C.U.P. |
|---|---|---|---|---|---|---|
| XMR-2015 | 26.8 | 2814 | 37,600 | 32.0 | 3311 | 52,000 |
| IMR-4895 | 30.0 | 3056 | 36,900 | 34.5 | 3479 | 52,400 |
| AA2460 | 27.7 | 2729 | 35,300 | 33.8 | 3309 | 51,800 |
| IMR-4064 | 31.0 | 3090 | 36,400 | 35.0 | 3490 | 50,800 |
| Varget | 32.6 | 3139 | 40,500 | 36.0 | 3447 | 51,000 |
| IMR-4320 | 31.0 | 3011 | 36,900 | 35.8 | 3480 | 52,800 |
| RX15 | 30.5 | 3162 | 40,100 | 34.5 | 3508 | 51,400 |
| **H380** | **34.0** | **3268** | **43,700** | 37.5 | 3554 | 52,800 |
| N150 | 31.4 | 3096 | 42,800 | 35.0 | 3380 | 51,400 |
| H414 | 35.0 | 3128 | 38,500 | 38.0+ | 3510 | 52,100 |
| IMR-4350 | 36.0 | 3149 | 40,700 | 40.0+ | 3464 | 51,200 |
| RX19 | 37.4 | 2999 | 36,300 | 41.0+ | 3350 | 47,300 |

### #225415
55 gr. (#2 Alloy) 2.325" OAL

**BC:** .116
**SD:** .157

| Powder | Sugg Starting Grains | Velocity fps | Pressure C.U.P. | Max Load Grains | Velocity fps | Pressure C.U.P. |
|---|---|---|---|---|---|---|
| Red Dot | 7.2 | 1981 | 22,800 | 9.5 | 2323 | 35,000 |
| 700X | 7.0 | 1850 | 18,000 | 9.0 | 2268 | 33,500 |
| Green Dot | 7.5 | 1992 | 21,000 | 10.0 | 2356 | 34,500 |
| PB | 7.5 | 1920 | 18,000 | 9.5 | 2188 | 31,000 |
| SR-7625 | 8.0 | 1981 | 20,400 | 10.0 | 2237 | 36,900 |
| SR-4756 | 8.0 | 1915 | 18,000 | 11.0 | 2308 | 32,000 |
| SR-4759 | 14.5 | 2176 | 13,000 | 19.0 | 2820 | 26,900 |
| **XMP-5744** | **15.3** | **2032** | 13,000 | 17.0 | 2219 | 20,500 |
| IMR-4198 | 16.9 | 2173 | 12,100 | 22.1 | 2867 | 23,900 |
| 748 | 22.3 | 2175 | 13,600 | 28.5 | 2814 | 21,500 |

**Note:** Loads shown in shaded panels are maximum.
Loads shown in bold designate potentially most accurate load.

+Designates a compressed powder charge.
**Designates a reduced load.

**#225646**
55 gr. (#2 Alloy) 2.350" OAL

**BC:** .155
**SD:** .157

| Powder | Sugg Starting Grains | Velocity fps | Pressure C.U.P. | Max Load Grains | Velocity fps | Pressure C.U.P. |
|---|---|---|---|---|---|---|
| Red Dot | 7.7 | 1797 | 22,100 | 10.4 | 2165 | 33,900 |
| 700X | 8.0 | 1887 | 24,500 | 11.0 | 2286 | 40,200 |
| Green Dot | 8.2 | 1862 | 23,200 | 11.5 | 2292 | 39,700 |
| PB | 9.0 | 1892 | 27,300 | 11.0 | 2128 | 38,900 |
| SR-7625 | 9.2 | 1905 | 26,700 | 11.7 | 2219 | 42,700 |
| SR-4756 | 10.2 | 1986 | 26,700 | 12.6 | 2271 | 38,100 |
| SR-4759 | 16.5 | 2218 | 22,000 | 18.5 | 2543 | 35,200 |
| IMR-4227 | 16.5 | 2274 | 23,500 | 21.0 | 2754 | 36,200 |
| **XMP-5744** | 16.2 | 2065 | 18,000 | **18.0** | **2243** | **22,400** |
| IMR-4198 | 18.5 | 2172 | 18,400 | 24.6 | 2913 | 37,100 |
| 748 | 28.5 | 2380 | 19,000 | 34.0 | 3100 | 38,000 |

**Note:** Loads shown in shaded panels are maximum.
Loads shown in bold designate potentially most accurate load.

# 220 Swift

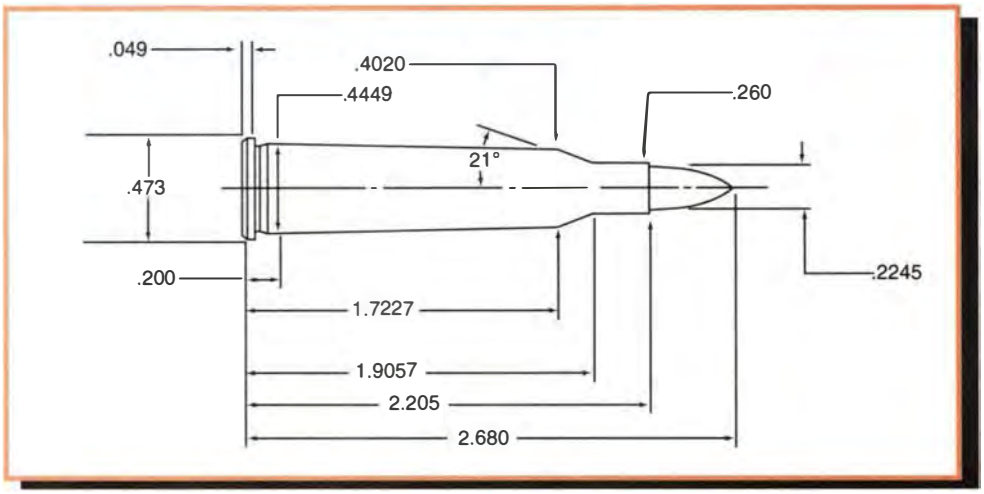


**Comments:**

Winchester introduced the 220 Swift in 1935 as a high performance varmint cartridge. Nearly 70 years later, it is still the fastest factory offering among the 22 caliber center-fire cartridges. he Swift is based on the old 6mm Lee Navy necked down to accept .224" bullets. Controversy has followed the Swift throughout its history. Most of this controversy has focused around barrel life. Technology at the time of its introduction handicapped the full potential of the Swift. However, latter-day developments of better quality steel and slower burning powders combined with sensible handloading have improved the life expectancy of a Swift barrel. Shooters should not overheat the barrel with sustained fire and avoid fouling by frequent cleaning—preferably with a coated rod and a good bore-guide. Some shooters opt to keep loads below maximum velocities to prolong barrel life. Handloaders seeking 4,000 feet per second with 50-grain bullets are not doing their Swift any favors. Winchester discontinued the Swift in favor of a new cartridge, the 225 Winchester. While the 225 only lasted for several years before fading away, the 220 Swift remains fairly popular with varmint hunters. Remington and Ruger both currently offer rifles chambered for the Swift. Several different VihtaVuori powders produced uniform results during our testing but IMR-4064 has been a favorite among Swift shooters for many years.

**Test Components:**

Cases . . . . . .Winchester
Trim-to Length . . . . . .2.195"
Primers . . . .Remington 9½, Winchester WLR, CCI 200
Primer Size . . . . . .Large Rifle
Lyman Shell Holder . . . . . .No. 5
Jacketed Bullets Used .Speer Spire Point #1017, 40 gr.
Sierra SPT #1310, 45 gr.
Sierra SP Blitz #1340, 50 gr.
Sierra SPT #1360, 55 gr.
Hornady V-Max #22281, 60 gr.
Sierra SMP #1370, 63 gr.
Speer SP #1053, 70 gr.
Cast Bullets Used . . . . . .(sized to .224" dia)
*gas check bullet *#225415, 55gr.

**Test Specifications: (Velocity & Pressure)**

Firearm Used . . . . . .Winchester Model 70 Universal Receiver
Barrel Length . . . . . .Winchester, 26"
Universal Receiver, 24"
Twist . . . . . .1-14"
Groove Dia. . . . . .224"

****40 gr. Jacketed SP** — BC: .144 SD: .114
2.650" OAL

| Powder | Sugg Starting Grains | Velocity fps | Pressure C.U.P. | Max Load Grains | Velocity fps | Pressure C.U.P. |
|---|---|---|---|---|---|---|
| **IMR-3031** | **35.0** | **3906** | — | 39.0 | 4385 | — |
| IMR-4064 | 37.0 | 3891 | — | 41.0+ | 4347 | — |
| IMR-4895 | 35.0 | 3663 | — | 39.0 | 4166 | — |
| IMR-4320 | 37.0 | 3861 | — | 41.0 | 4291 | — |
| H-380 | 40.0 | 3831 | — | 44.0+ | 4166 | — |
| IMR-4350 | 39.0 | 3546 | — | 43.0+ | 3968 | — |

**45 gr. Jacketed SPT** — BC: .210 SD: .128
2.660" OAL

| Powder | Sugg Starting Grains | Velocity fps | Pressure C.U.P. | Max Load Grains | Velocity fps | Pressure C.U.P. |
|---|---|---|---|---|---|---|
| **IMR-3031 | 34.0 | 3717 | — | 38.5 | 4219 | — |
| **IMR-4895 | 34.0 | 3559 | — | 38.5 | 4065 | — |
| **IMR-4064 | 36.0 | 3626 | — | 40.5+ | 4184 | — |
| **IMR-4320 | 36.0 | 3663 | — | 40.5 | 4166 | — |
| ***N140 | 36.0 | 3638 | 42,000 | 40.0 | 4042 | 51,900 |
| ***RX15 | 36.5 | 3708 | 43,300 | 40.5 | 4121 | 52,200 |
| **H-380 | 39.0 | 3663 | — | 43.0 | 3984 | — |
| *****N150** | **36.5** | **3689** | **43,100** | 40.5 | 4044 | 53,200 |
| ***AA2700 | 40.5 | 3681 | 44,500 | 45.0 | 3974 | 53,900 |
| **IMR-4350 | 39.0 | 3521 | — | 43.0+ | 3861 | — |

**Note:** Loads shown in shaded panels are maximum.
Loads shown in bold designate potentially most accurate load.
\+ Designates a compressed powder charge.
** Tested in a Winchester Model 70 with Remington 9½ primers.
*** Tested in a Universal Receiver with Remington 9½ primers.

# 220 Swift

**50 gr. Jacketed Blitz**
2.670" OAL
**BC:** .222
**SD:** .142

| Powder | Sugg Starting Grains | Velocity fps | Pressure C.U.P. | Max Load Grains | Velocity fps | Pressure C.U.P. |
|---|---|---|---|---|---|---|
| **IMR-3031 | 34.0 | 3650 | — | 38.0 | 4065 | — |
| **IMR-4895 | 34.0 | 3559 | — | 38.0 | 3952 | — |
| **IMR-4064 | 36.0 | 3650 | — | 40.0 | 4081 | — |
| **IMR-4320 | 36.0 | 3597 | — | 40.0 | 4000 | — |
| ***N140 | 35.0 | 3537 | 44,400 | 39.0 | 3878 | 53,500 |
| **H-380 | 38.0 | 3571 | — | 42.5 | 3906 | — |
| *****N150** | **34.5** | **3519** | **42,900** | 37.5 | 3839 | 53,300 |
| ***AA2700 | 39.5 | 3519 | 44,200 | 44.0 | 3865 | 53,500 |
| ***760 | 38.7 | 3107 | 33,900 | 44.0 | 3934 | 53,000 |
| **IMR-4350 | 39.0 | 3509 | — | 43.0+ | 3921 | — |
| ***RX19 | 40.5 | 3205 | 39,000 | 45.0+ | 3639 | 48,700 |

**55 gr. Jacketed SPT**
2.675" OAL
**BC:** .237
**SD:** .157

| Powder | Sugg Starting Grains | Velocity fps | Pressure C.U.P. | Max Load Grains | Velocity fps | Pressure C.U.P. |
|---|---|---|---|---|---|---|
| **IMR-3031 | 33.0 | 3509 | — | 37.0 | 3921 | — |
| **IMR-4895 | 33.0 | 3427 | — | 37.0 | 3787 | — |
| **IMR-4064 | 35.0 | 3472 | — | 39.0 | 3906 | — |
| **IMR-4320 | 35.0 | 3460 | — | 39.0 | 3861 | — |
| **H-380 | 38.0 | 3497 | — | 42.0 | 3773 | — |
| ***N150 | 31.5 | 3353 | 44,100 | 35.0 | 3597 | 51,800 |
| ***AA2700 | 39.2 | 3457 | 44,900 | 43.5 | 3729 | 53,400 |
| ***760 | 38.0 | 3382 | 42,800 | 42.0 | 3683 | 52,700 |
| *****N160** | 39.5 | 3388 | 42,500 | **44.0** | **3764** | **51,100** |
| **IMR-4350 | 38.0 | 3356 | — | 42.5+ | 3787 | — |
| ***RX19 | 40.0 | 3334 | 43,800 | 44.5+ | 3643 | 53,300 |

*****60 gr. Jacketed V-Max**
2.680" OAL
**BC:** .265
**SD:** .171

| Powder | Sugg Starting Grains | Velocity fps | Pressure C.U.P. | Max Load Grains | Velocity fps | Pressure C.U.P. |
|---|---|---|---|---|---|---|
| IMR-4064 | 33.3 | 3296 | 45,800 | 37.0 | 3572 | 53,600 |
| Varget | 32.5 | 3288 | 45,700 | 36.0 | 3507 | 53,800 |
| IMR-4320 | 33.0 | 3227 | 43,800 | 37.5 | 3550 | 53,000 |
| H-380 | 36.0 | 3173 | 45,500 | 40.0 | 3389 | 53,800 |
| AA2700 | 37.8 | 3314 | 46,500 | 42.0 | 3466 | 53,000 |
| 760 | 37.5 | 3279 | 43,200 | 41.5 | 3585 | 52,700 |
| **N160** | 37.8 | 3291 | 44,100 | **42.0** | **3568** | **52,300** |
| IMR-4350 | 37.8 | 3236 | 43,500 | 42.0+ | 3559 | 53,100 |
| RX19 | 40.0 | 3255 | 45,800 | 44.5+ | 3540 | 54,000 |
| XMR-3100 | 39.5 | 3163 | 43,300 | 44.0+ | 3497 | 53,800 |

**63 gr. Jacketed SMP**
2.680" OAL
**BC:** .231
**SD:** .179

| Powder | Sugg Starting Grains | Velocity fps | Pressure C.U.P. | Max Load Grains | Velocity fps | Pressure C.U.P. |
|---|---|---|---|---|---|---|
| **IMR-4895 | 30.0 | 3067 | — | 33.5 | 3378 | — |
| **IMR-4064 | 31.0 | 3144 | — | 35.0 | 3472 | — |
| **IMR-4320 | 31.0 | 3105 | — | 35.0 | 3436 | — |
| **H-380 | 37.0 | 3356 | — | 41.0 | 3623 | — |
| ***AA2700 | 36.2 | 3264 | 48,300 | 40.2 | 3417 | 53,000 |
| ***760 | 36.0 | 3170 | 41,500 | 41.0 | 3488 | 52,300 |
| ****IMR-4350** | **37.0** | **3322** | — | 40.0 | 3584 | — |
| ***RX19 | 39.5 | 3241 | 46,200 | 44.0+ | 3530 | 54,000 |

*****70 gr. Jacketed SP**
2.600" OAL
**BC:** .214
**SD:** .199

| Powder | Sugg Starting Grains | Velocity fps | Pressure C.U.P. | Max Load Grains | Velocity fps | Pressure C.U.P. |
|---|---|---|---|---|---|---|
| IMR-4895 | 29.5 | 2987 | 45,000 | 33.0 | 3284 | 53,000 |
| IMR-4064 | 29.5 | 3025 | 47,700 | 33.5 | 3282 | 53,000 |
| IMR-4320 | 29.9 | 2937 | 43,800 | 34.0 | 3251 | 52,500 |
| AA2700 | 33.3 | 2880 | 42,200 | 37.0 | 3198 | 53,000 |
| 760 | 34.3 | 3002 | 44,300 | 39.0 | 3324 | 52,900 |
| **IMR-4350** | **34.3** | **3112** | **44,000** | 39.0 | 3399 | 53,000 |
| XMR-3100 | 37.8 | 3046 | 46,300 | 42.0+ | 3260 | 54,000 |
| RX22 | 38.7 | 3143 | 49,200 | 43.0+ | 3327 | 53,500 |

**#225415**
55 gr. (#2 Alloy) 2.546" OAL
**BC:** .116
**SD:** .156

| Powder | Sugg Starting Grains | Velocity fps | Pressure C.U.P. | Max Load Grains | Velocity fps | Pressure C.U.P. |
|---|---|---|---|---|---|---|
| +++Red Dot | 6.5 | 1730 | — | 10.0 | 2270 | — |
| +++700X | 6.5 | 1710 | — | 10.0 | 2275 | — |
| +++Green Dot | 7.0 | 1800 | — | 10.5 | 2305 | — |
| +++PB | 7.0 | 1680 | — | 10.5 | 2210 | — |
| +++Unique | 7.5 | 1805 | — | 11.0 | 2320 | — |
| +++SR-7625 | 7.5 | 1765 | — | 11.0 | 2280 | — |
| ++2400 | 10.5 | 1772 | 16,500 | 17.4 | 2723 | 31,500 |
| **++SR-4759** | **12.2** | **1748** | **15,500** | 18.5 | 2683 | 30,300 |

**Note:** Loads shown in shaded panels are maximum.
Loads shown in bold designate potentially most accurate load.
+ Designates a compressed powder charge.
** Tested in a Winchester Model 70 with Remington 9½ primers.
*** Tested in a Universal Receiver with Remington 9½ primers.
+++Tested in a Winchester Model 70 with Win. WLR primers.
++Tested in a Universal Receiver with CCI 200 primers.

# 6mm PPC

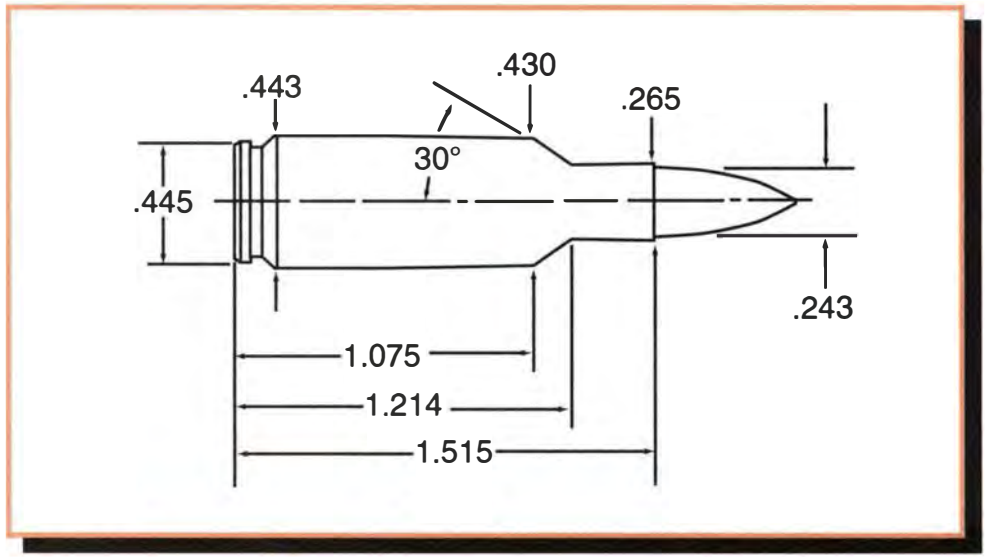


**Comments:**

This cartridge has proven itself the most accurate round ever developed. Its originators, Ferris Pindell and Dr. Louis Palmisano were the first of many bench rest shooters to so prove. Today the "Six" holds more records than any other cartridge.

A group of 10 shots at 100 yards going into a 1/4" center to center group would not get the attention of a serious bench rest shooter with 6mm PPC experience. The cartridge will do better. Naturally such accuracy demands the very best in bullets, loading technique, and the appropriate charge of H322 or perhaps H335. Still, we have fired a production Sako single shot rifle with factory Sako ammunition and obtained frequent 1/4" to 1/2" groups. Nothing else has ever come close to this kind of out-of-the-box performance.

The twist rate of most 6mm PPC's works best with bullets of 68 to 75 grains. Heavier bullets will not always stabilize and poor results may occur.

**Test Components:**

Cases . . . . . .SAKO
Trim-to Length . . . . . .1.505"
Primers . . . . . .Remington 7½
Primer Size . . . . . .Small Rifle
Lyman Shell Holder . . . . . .No. 3
Jacketed Bullets Used . . . . . .Sierra HP #1500, 60 gr.
Sierra HPBT #1505, 70 gr.
Hornady HP #2420, 75 gr.
Sierra HPBT #1530, 85 gr.

**Test Specifications:**
**(Velocity & Pressure)**

Firearm Used . . . . . .Universal Receiver
Barrel Length . . . . . .22"
Twist . . . . . .1-14"
Groove Dia. . . . . ..2435"

**60 gr. Jacketed HP** — 2.050" OAL — **BC:** .182 **SD:** .145

| Powder | Sugg Starting Grains | Velocity fps | Pressure C.U.P. | Max Load Grains | Velocity fps | Pressure C.U.P. |
|---|---|---|---|---|---|---|
| N130 | 21.1 | 2634 | 29,500 | 26.0 | 3168 | 47,900 |
| IMR-4198 | 21.0 | 2734 | 32,200 | 23.5 | 3076 | 46,000 |
| XMR-2015 | 25.0 | 2961 | 34,400 | 27.5 | 3272 | 45,300 |
| H-322 | 24.8 | 2846 | 33,000 | 27.5 | 3200 | 47,200 |
| AA2230 | 26.2 | 2876 | 35,400 | 30.0+ | 3212 | 47,900 |
| H-335 | 26.5 | 2874 | 34,500 | 29.5 | 3208 | 48,500 |
| BL-C(2) | 28.0 | 2803 | 34,400 | 31.2+ | 3092 | 46,400 |
| AA2460 | 26.5 | 2846 | 34,600 | 29.0 | 3133 | 46,600 |
| 748 | 27.6 | 2819 | 32,800 | 31.7 | 3204 | 48,900 |
| **Varget** | **25.4** | **2672** | **29,900** | 30.0+ | 3144 | 42,900 |

**70 gr. Jacketed HPBT** — 2.075" OAL — **BC:** .259 **SD:** .169

| Powder | Sugg Starting Grains | Velocity fps | Pressure C.U.P. | Max Load Grains | Velocity fps | Pressure C.U.P. |
|---|---|---|---|---|---|---|
| N130 | 22.9 | 2753 | 35,900 | 25.5 | 3016 | 48,600 |
| IMR-4198 | 21.0 | 2611 | 32,400 | 23.5+ | 2962 | 48,700 |
| XMR-2015 | 24.5 | 2801 | 35,000 | 27.0 | 3138 | 48,900 |
| H-322 | 24.5 | 2742 | 34,200 | 26.5 | 2999 | 45,500 |
| AA-2230 | 26.0 | 2732 | 34,800 | 29.0 | 3050 | 48,200 |
| **H-335** | 26.1 | 2674 | 33,800 | **29.0** | **2992** | **48,200** |
| BL-C(2) | 27.5 | 2675 | 35,000 | 30.5 | 2962 | 47,400 |
| AA2460 | 26.0 | 2705 | 35,200 | 28.5 | 2980 | 46,300 |
| 748 | 27.5 | 2697 | 34,000 | 31.0+ | 3032 | 47,700 |
| Varget | 25.3 | 2561 | 30,400 | 29.0+ | 2986 | 43,500 |

**Note:** Loads shown in shaded panels are maximum.
Loads shown in bold designate potentially most accurate load.
\+ Designates a compressed powder charge.

# 6mm PPC

**75 gr. Jacketed HP**
2.120" OAL
**BC:** .294
**SD:** .181

| Powder | Sugg Starting Grains | Velocity fps | Pressure C.U.P. | Max Load Grains | Velocity fps | Pressure C.U.P. |
|---|---|---|---|---|---|---|
| N130 | 22.7 | 2639 | 34,500 | 25.2 | 2900 | 45,800 |
| IMR-4198 | 20.5 | 2555 | 34,000 | 23.0+ | 2835 | 46,800 |
| XMR-2015 | 23.2 | 2629 | 33,800 | 26.0 | 2990 | 48,300 |
| **H-322** | **23.8** | **2645** | **35,400** | 26.0 | 2930 | 47,200 |
| AA2230 | 25.0 | 2620 | 33,800 | 28.0 | 2932 | 47,100 |
| H-335 | 26.3 | 2657 | 34,900 | 29.3 | 2978 | 48,500 |
| BL-C(2) | 26.2 | 2533 | 32,400 | 29.5 | 2880 | 47,400 |
| AA2460 | 25.3 | 2570 | 33,200 | 28.5 | 2930 | 48,100 |
| 748 | 26.8 | 2649 | 33,600 | 30.2+ | 2976 | 48,100 |
| Varget | 26.5 | 2587 | 31,900 | 29.5+ | 2974 | 44,500 |

**85 gr. Jacketed HPBT**
2.035" OAL
**BC:** .282
**SD:** .206

| Powder | Sugg Starting Grains | Velocity fps | Pressure C.U.P. | Max Load Grains | Velocity fps | Pressure C.U.P. |
|---|---|---|---|---|---|---|
| **N130** | 21.8 | 2484 | 35,300 | **24.2** | **2716** | **47,300** |
| IMR-4198 | 19.5 | 2366 | 35,000 | 21.5+ | 2622 | 47,300 |
| XMR-2015 | 22.0 | 2483 | 34,400 | 24.5 | 2776 | 46,400 |
| H-322 | 22.5 | 2465 | 35,500 | 24.5 | 2702 | 45,800 |
| AA230 | 24.3 | 2473 | 34,000 | 27.0 | 2739 | 46,700 |
| H-335 | 25.5 | 2494 | 34,000 | 28.4 | 2809 | 49,000 |
| BL-C(2) | 25.2 | 2429 | 34,400 | 28.5 | 2729 | 47,300 |
| AA2460 | 24.0 | 2440 | 34,600 | 27.2 | 2757 | 48,900 |
| 748 | 25.8 | 2500 | 34,400 | 29.0+ | 2790 | 48,000 |
| Varget | 25.6 | 2560 | 36,100 | 28.5+ | 2809 | 45,200 |

**Note:** Loads shown in shaded panels are maximum.
Loads shown in bold designate potentially most accurate load.
\+ Designates a compressed powder charge.

# 243 Winchester

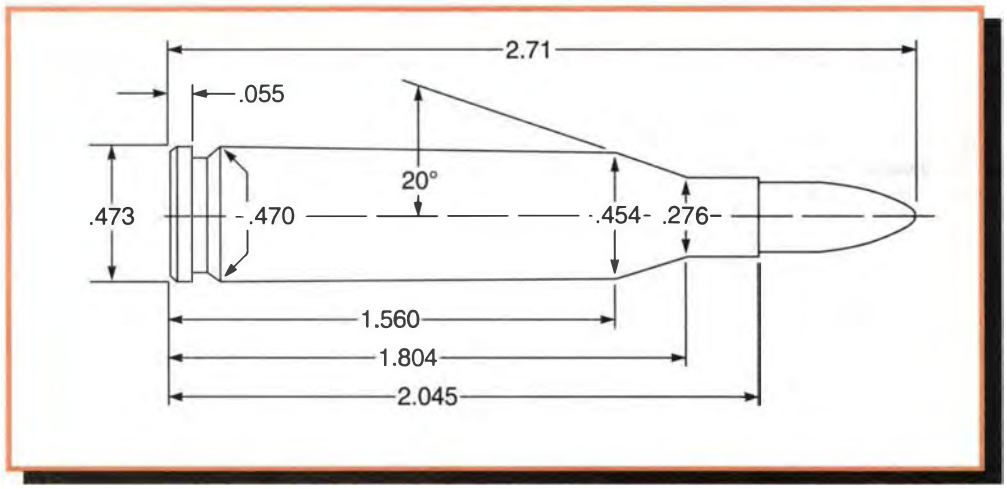


**Comments:**

The 243 Winchester is one of the first cartridges to evolve from the 308 Winchester /7.62 NATO. The late Warren Page is the gunwriter most closely associated with the 243 as a result of his experiments with necking down the 308 during the early 1950s. Winchester's 243 immediately proved suitable not only for smaller varmints but also for deer sized game due to its 1 in 10" twist rate. The 1-12" twist of Remington's concurrently introduced 244 Remington limited it to lighter weight bullets generally unsuitable for deer. Proper shot placement is crucial as the 243/6mm bore size is the minimum allowed for pursuing whitetails in many states. The fairly wide range of .243" diameter bullets available make this a versatile cartridge for the handloader. It is a good all-around cartridge for the more recoil-sensitive shooter. The 243 has also found appeal in recent years with competitors on the High Power Rifle circuit. Its "overbored" nature require use of slower powders normally associated with larger magnum rifles. IMR-4350 and Reloder 22 often produce best results, especially with bullets over 90 grains. Shooters using cast bullets should keep velocities around 2,000 feet per second or below.

**Test Components:**

Cases . . . . . .Remington
Trim-to Length . . . . . .2.035"
Primers . . . . . .Remington 9½
Primer Size . . . . . .Large Rifle
Lyman Shell Holder . . . . . .No. 2
Jacketed Bullets Used .Hornady V-Max #22411, 58 gr.
Sierra HP #1500, 60 gr.
Hornady V-Max #22415, 65 gr.
Sierra HPBT #1505, 70 gr.
Speer HP #1205, 75 gr.
Speer HP #1211, 80 gr.
Sierra HPBT #1530, 85 gr.
Sierra FMJBT #1535, 90 gr.
Hornady, BTSP #2453, 100 gr.
Hornady A-Max #24562, 105 gr.
Cast Bullets Used . . . . . .(sized to .243" dia)
*gas check bullet *245496, 84 gr

**Test Specifications:**
**(Velocity & Pressure)**

Firearm Used . . . . . .Universal Receiver
Barrel Length . . . . . .24"
Twist . . . . . .1-10"
Groove Dia. . . . . ..243"

**58 gr. Jacketed V-Max** — **BC:** .250 **SD:** .140
2.625" OAL

| Powder | Sugg Starting Grains | Velocity fps | Pressure P.S.I. | Max Load Grains | Velocity fps | Pressure P.S.I. |
|---|---|---|---|---|---|---|
| RX7 | 33.3 | 3404 | 45,900 | 37.0 | 3701 | 58,600 |
| IMR-3031 | 38.7 | 3482 | 42,000 | 43.0 | 3884 | 56,900 |
| IMR-4895 | 40.5 | 3490 | 45,000 | 45.0 | 3877 | 59,700 |
| Varget | 40.9 | 3526 | 44,400 | 45.5 | 3891 | 58,800 |
| AA2520 | 38.7 | 3423 | 43,300 | 43.0 | 3747 | 55,500 |
| IMR-4320 | 40.9 | 3531 | 46,800 | 45.5 | 3876 | 59,800 |
| H-380 | 44.6 | 3437 | 42,800 | 49.6 | 3850 | 58,300 |
| H-414 | 45.0 | 3488 | 44,530 | 50.0 | 3824 | 56,900 |
| **IMR-4350** | **45.0** | **3331** | **41,200** | 50.0+ | 3776 | 57,000 |
| H-4831 | 47.7 | 3267 | 38,100 | 53.0+ | 3662 | 52,600 |

**60 gr. Jacketed HP** — **BC:** .182 **SD:** .145
2.600" OAL

| Powder | Sugg Starting Grains | Velocity fps | Pressure C.U.P. | Max Load Grains | Velocity fps | Pressure C.U.P. |
|---|---|---|---|---|---|---|
| IMR-3031 | 36.0 | 3365 | 36,400 | 41.0 | 3773 | 49,600 |
| BL-C(2) | 37.0 | 3323 | 37,300 | 41.5 | 3731 | 50,000 |
| IMR-4064 | 38.0 | 3409 | 38,100 | 42.5 | 3774 | 49,200 |
| IMR-4895 | 38.0 | 3488 | 43,300 | 42.0 | 3772 | 52,000 |
| IMR-4320 | 39.0 | 3385 | 41,100 | 43.5 | 3707 | 50,000 |
| H-380 | 40.0 | 3448 | 42,000 | 45.0 | 3778 | 51,200 |
| IMR-4350 | 42.0 | 3291 | 37,300 | 47.0+ | 3726 | 51,600 |
| H-4831 | 43.0 | 3057 | 34,000 | 49.0+ | 3596 | 48,400 |

**Note:** Loads shown in shaded panels are maximum.
Loads shown in bold designate potentially most accurate load.
\+ Designates a compressed powder charge.

# 243 Winchester

### 65 gr. Jacketed V-Max
2.625" OAL

**BC:** .280
**SD:** .157

| Powder | Sugg Starting Grains | Velocity fps | Pressure P.S.I. | Max Load Grains | Velocity fps | Pressure P.S.I. |
|---|---|---|---|---|---|---|
| RX7 | 30.7 | 3175 | 45,800 | 34.2 | 3445 | 58,000 |
| IMR-3031 | 36.4 | 3360 | 45,900 | 40.5 | 3636 | 57,000 |
| IMR-4895 | 38.7 | 3328 | 45,800 | 43.0 | 3645 | 58,000 |
| Varget | 38.2 | 3342 | 45,100 | 42.0 | 3644 | 57,100 |
| AA2520 | 36.2 | 3329 | 48,000 | 40.5 | 3603 | 58,800 |
| IMR-4064 | 39.6 | 3369 | 45,900 | 44.0 | 3696 | 58,400 |
| IMR-4320 | 39.6 | 3363 | 47,600 | 44.0 | 3676 | 59,400 |
| H-380 | 43.2 | 3346 | 46,500 | 48.0 | 3670 | 59,700 |
| 760 | 43.7 | 3306 | 42,800 | 48.5 | 3685 | 58,300 |
| H414 | 44.0 | 3294 | 43,300 | 49.0 | 3664 | 57,600 |
| **IMR-4350** | **43.2** | **3209** | **42,700** | 48.0 | 3602 | 57,400 |
| H4831 SC | 47.2 | 3260 | 44,100 | 52.5+ | 3607 | 58,500 |

### 75 gr. Jacketed HP
2.600" OAL

**BC:** .234
**SD:** .181

| Powder | Sugg Starting Grains | Velocity fps | Pressure | Max Load Grains | Velocity fps | Pressure |
|---|---|---|---|---|---|---|
| XMR-2015 | 30.0 | 2937 | 40,600 | 34.5 | 3224 | 51,900 C |
| IMR-3031 | 34.0 | 3097 | 38,600 | 38.0 | 3407 | 49,000 C |
| H-335 | 32.6 | 2930 | 46,800 | 37.0 | 3193 | 52,000 C |
| BL-C(2) | 34.0 | 2974 | 41,100 | 38.0 | 3264 | 50,400 C |
| IMR-4895 | 34.0 | 3041 | 37,700 | 39.0 | 3407 | 50,800 C |
| IMR-4064 | 36.0 | 3127 | 39,000 | 40.5 | 3460 | 50,400 C |
| **Varget** | 37.5 | 3181 | 47,900 | **41.0** | **3446** | **59,700 P** |
| IMR-4320 | 37.0 | 3155 | 42,000 | 41.0 | 3437 | 50,000 C |
| H-380 | 36.0 | 3020 | 42,000 | 40.0 | 3294 | 52,000 C |
| 760 | 40.5 | 3027 | 38,000 | 46.0 | 3375 | 51,200 C |
| H-414 | 41.4 | 3077 | 41,300 | 47.0 | 3435 | 51,900 C |
| IMR-4350 | 40.0 | 3160 | 44,200 | 45.0 | 3425 | 51,200 C |
| H4831 | 43.0 | 3099 | 41,100 | 48.0+ | 3486 | 51,600 C |
| RX22 | 42.1 | 3048 | 44,000 | 47.0+ | 3474 | 59,400 P |

### 85 gr. Jacketed HPBT
2.615" OAL

**BC:** .282
**SD:** .206

| Powder | Sugg Starting Grains | Velocity fps | Pressure | Max Load Grains | Velocity fps | Pressure |
|---|---|---|---|---|---|---|
| IMR-4895 | 33.0 | 2883 | 38,600 | 38.0 | 3211 | 49,600 C |
| IMR-4064 | 34.0 | 2824 | 33,500 | 39.0 | 3236 | 49,200 C |
| Varget | 35.2 | 2991 | 48,600 | 39.0 | 3222 | 58,900 P |
| IMR-4320 | 35.0 | 2920 | 38,600 | 40.0 | 3255 | 50,000 C |
| AA2700 | 39.0 | 2937 | 46,700 | 42.5 | 3224 | 59,900 P |
| RX15 | 32.0 | 2787 | 36,800 | 38.0 | 3147 | 50,000 C |
| H-380 | 33.0 | 2686 | 36,400 | 38.5 | 3094 | 50,400 C |
| 760 | 39.2 | 2907 | 41,000 | 44.5 | 3176 | 50,800 C |
| H-414 | 40.0 | 2924 | 41,600 | 45.5 | 3234 | 51,200 C |
| IMR-4350 | 38.0 | 2844 | 36,900 | 44.0 | 3283 | 51,200 C |
| RX19 | 41.0 | 2847 | 42,100 | 46.0 | 3210 | 57,300 P |
| XMR3100 | 42.7 | 2813 | 41,200 | 47.5 | 3198 | 57,700 P |
| **H-4831** | **41.0** | **2832** | **36,400** | 46.5+ | 3266 | 49,600 C |
| RX22 | 41.2 | 2837 | 43,900 | 45.5 | 3250 | 59,000 P |

### 70 gr. Jacketed HPBT
2.625" OAL

**BC:** .259
**SD:** .169

| Powder | Sugg Starting Grains | Velocity fps | Pressure | Max Load Grains | Velocity fps | Pressure |
|---|---|---|---|---|---|---|
| XMR-2015 | 31.0 | 3081 | 36,800 | 37.0 | 3448 | 51,900 C |
| IMR-3031 | 35.0 | 3281 | 41,600 | 39.5 | 3482 | 52,000 C |
| H-335 | 32.6 | 3011 | 42,300 | 37.0 | 3291 | 51,900 C |
| BL-C(2) | 35.0 | 3142 | 41,100 | 39.0 | 3419 | 50,800 C |
| IMR-4895 | 36.0 | 3257 | 41,100 | 40.0 | 3539 | 51,200 C |
| IMR-4064 | 37.0 | 3316 | 42,900 | 41.0 | 3610 | 52,000 C |
| **Varget** | 37.5 | 3301 | 47,900 | **41.7** | **3553** | **58,700 P** |
| AA2520 | 34.0 | 3031 | 38,600 | 39.0 | 3345 | 50,500 C |
| IMR-4320 | 37.0 | 3177 | 38,600 | 42.0 | 3526 | 49,600 C |
| H-380 | 37.0 | 3136 | 39,900 | 41.0 | 3440 | 50,800 C |
| 760 | 41.6 | 3146 | 39,300 | 47.3 | 3492 | 52,000 C |
| H-414 | 43.1 | 3263 | 43,100 | 49.0+ | 3592 | 52,000 C |
| IMR-4350 | 40.0 | 3193 | 39,900 | 45.5 | 3578 | 52,400 C |
| H4831SC | 43.0 | 3142 | 38,100 | 49.0+ | 3552 | 52,000 C |

### 80 gr. Jacketed SP
2.655" OAL

**BC:** .365
**SD:** .193

| Powder | Sugg Starting Grains | Velocity fps | Pressure | Max Load Grains | Velocity fps | Pressure |
|---|---|---|---|---|---|---|
| IMR-4895 | 32.0 | 2873 | 35,000 | 38.5 | 3308 | 50,400 C |
| IMR-4064 | 34.0 | 2958 | 36,400 | 39.5 | 3378 | 49,600 C |
| **AA-2520** | 31.9 | 2861 | 46,900 | **35.5** | **3118** | **58,000P** |
| IMR-4320 | 36.0 | 3057 | 40,700 | 40.5 | 3329 | 49,200 C |
| RX15 | 33.0 | 2951 | 43,100 | 37.0 | 3151 | 51,000 C |
| H-380 | 35.0 | 2956 | 41,600 | 39.0 | 3210 | 51,600 C |
| 760 | 38.2 | 3019 | 48,600 | 42.5 | 3285 | 59,100 P |
| H-414 | 40.0 | 3058 | 46,300 | 45.5 | 3314 | 52,000 C |
| IMR-4350 | 39.0 | 3035 | 39,400 | 41.5 | 3194 | 52,000 C |
| RX19 | 43.0 | 3087 | 42,600 | 48.0 | 3373 | 51,400 C |
| H4831 | 42.0 | 3059 | 41,600 | 47.0+ | 3406 | 51,600 C |
| RX22 | 42.1 | 3064 | 46,000 | 47.0+ | 3413 | 59,400 P |

### 90 gr. Jacketed FMJBT
2.650" OAL

**BC:** .387
**SD:** .218

| Powder | Sugg Starting Grains | Velocity fps | Pressure P.S.I. | Max Load Grains | Velocity fps | Pressure P.S.I. |
|---|---|---|---|---|---|---|
| IMR-4064 | 34.5 | 2887 | 48,600 | 38.5 | 3107 | 57,400 |
| Varget | 34.0 | 2901 | 49,300 | 38.0 | 3121 | 59,380 |
| IMR-4320 | 35.5 | 2952 | 53,200 | 39.0 | 3143 | 59,900 |
| AA2700 | 39.5 | 2830 | 44,900 | 44.0 | 3153 | 59,800 |
| RX15 | 34.2 | 2891 | 49,400 | 38.1 | 3095 | 58,340 |
| H-380 | 35.0 | 2741 | 45,100 | 38.0 | 2996 | 56,900 |
| H-414 | 40.0 | 2953 | 49,900 | 44.0 | 3168 | 57,500 |
| N160 | 40.5 | 2953 | 52,500 | 45.0 | 3147 | 58,800 |
| IMR-4350 | 40.5 | 2934 | 48,400 | 45.0 | 3215 | 59,700 |
| RX19 | 42.7 | 2922 | 46,100 | 47.3 | 3243 | 60,000 |
| XMR-3100 | 41.0 | 2788 | 42,100 | 46.0 | 3179 | 59,700 |
| **H4831** | 43.0 | 2916 | 47,100 | **48.0** | **3174** | **58,600** |
| RX22 | 40.3 | 2807 | 44,800 | 45.0 | 3146 | 56,700 |

**Note:** Loads shown in shaded panels are maximum.
Loads shown in bold designate potentially most accurate load.
\+ Designates a compressed powder charge.
In pressure column, C=Copper Units of Pressure (CUP); P=Pounds per Square Inch (PSI)

# 243 Winchester

**100 gr. Jacketed BTSP**
2.630" OAL
**BC:** .405
**SD:** .242

| Powder | Sugg Starting Grains | Velocity fps | Pressure P.S.I. | Max Load Grains | Velocity fps | Pressure P.S.I. |
|---|---|---|---|---|---|---|
| **Varget** | 31.0 | 2636 | 52,200 | **34.5** | **2845** | **58,800** |
| H-414 | 35.1 | 2613 | 48,800 | 39.0 | 2841 | 56,500 |
| IMR-4350 | 35.5 | 2579 | 48,500 | 39.5 | 2858 | 57,000 |
| XMR-4350 | 36.4 | 2613 | 48,200 | 40.5 | 2876 | 56,000 |
| RX19 | 37.3 | 2600 | 48,100 | 41.5 | 2898 | 57,400 |
| XMR-3100 | 37.8 | 2471 | 46,200 | 42.0 | 2787 | 55,800 |
| RX22 | 39.5 | 2612 | 44,200 | 44.0 | 2931 | 57,000 |

**105 gr. Jacketed A-Max**
2.710" OAL
**BC:** .500
**SD:** .254

| Powder | Sugg Starting Grains | Velocity fps | Pressure P.S.I. | Max Load Grains | Velocity fps | Pressure P.S.I. |
|---|---|---|---|---|---|---|
| Varget | 29.7 | 2545 | 52,300 | 33.0 | 2708 | 57,200 |
| H-414 | 34.2 | 2492 | 47,800 | 38.0 | 2753 | 56,400 |
| N160 | 36.0 | 2566 | 49,500 | 40.0 | 2796 | 56,800 |
| **IMR-4350** | 35.2 | 2468 | 37,300 | **39.2** | **2749** | **55,500** |
| XMR-3100 | 37.3 | 2430 | 46,700 | 41.5 | 2738 | 56,500 |
| RX22 | 37.8 | 2501 | 47,200 | 42.0 | 2793 | 56,400 |

**#245496**
84 gr. (#2 Alloy) 2.480" OAL
**BC:** .202
**SD:** .203

| Powder | Sugg Starting Grains | Velocity fps | Pressure C.U.P. | Max Load Grains | Velocity fps | Pressure C.U.P. |
|---|---|---|---|---|---|---|
| Red Dot | 10.0 | 1845 | 33,000 | 12.0 | 2032 | 40,300 |
| 700X | 8.5 | 1684 | 30,500 | 10.5 | 1904 | 39,000 |
| PB | 9.0 | 1653 | 29,400 | 11.0 | 1836 | 36,400 |
| SR-7625 | 9.5 | 1703 | 30,500 | 11.5 | 1909 | 39,400 |
| SR-4759 | 14.9 | 1668 | 12,800 | 20.0 | 2156 | 21,400 |
| **XMP-5744** | **13.0** | **1605** | **12,800** | 17.5 | 2006 | 19,600 |
| IMR-4227 | 14.5 | 1623 | 11,900 | 19.7 | 2156 | 23,200 |
| IMR-4198 | 16.0 | 1638 | 10,800 | 22.7 | 2175 | 19,200 |
| RX7 | 16.0 | 1676 | 12,400 | 21.0 | 2092 | 20,200 |
| 748 | 26.1 | 2114 | 18,200 | 39.0 | 2906 | 43,800 |
| H-335 | 25.8 | 2191 | 21,200 | 37.8 | 2926 | 46,000 |
| H-4895 | 25.0 | 2126 | 17,300 | 37.2 | 2970 | 47,400 |
| IMR-4320 | 28.2 | 2178 | 20,800 | 40.2 | 2996 | 45,700 |

**Note:** Loads shown in shaded panels are maximum.
Loads shown in bold designate potentially most accurate load.

# 6mm Remington (244 Remington)

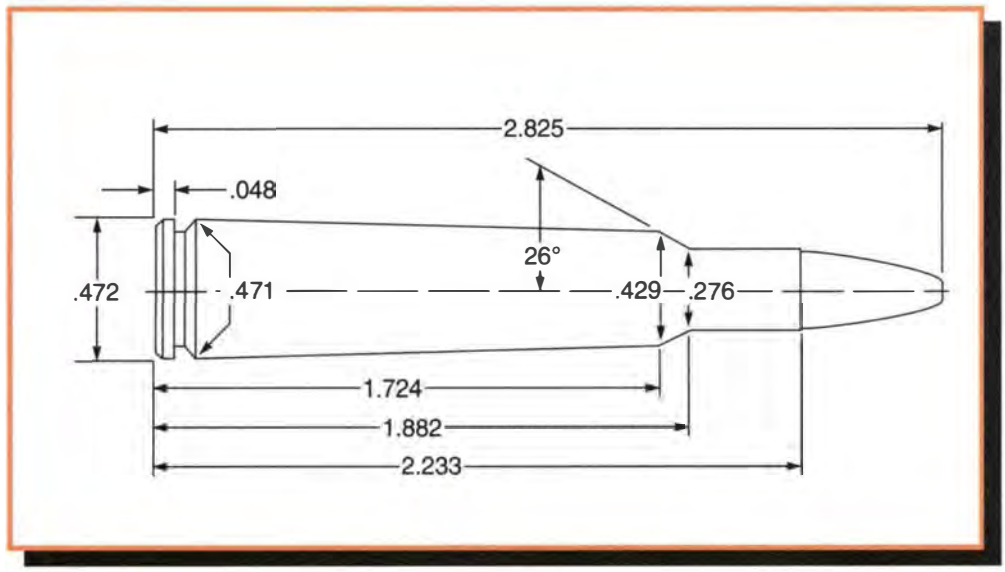


**Comments:**

The 6mm Remington has a slightly larger case capacity than the 243 suggesting a bit more velocity. However since most shooters have found it slightly less accurate than the Winchester round it has never been extremely popular.

Early rifles marked 244 Remington had a 1 in 12" twist and shot best with bullets of 90 grains or less. Rifles with the 6mm Remington markings usually have a 1 in 9" twist and shoot well with bullets up to 100 grains.

IMR 4350 is the ideal first propellant selection for all jacketed bullet weights.

Cast bullet #245496 at 1,700 fps., or less, is the best choice for lead bullet shooting.

**Test Components:**

Cases . . . . . .Remington
Trim-to Length . . . . . .2.225"
Primers . . . . . .Remington 9½
Primer Size . . . . . .Large Rifle
Lyman Shell Holder . . . . . .No. 2
Jacketed Bullets Used . . . . . .Sierra HP #1500, 60 gr.
Sierra HPBT #1505, 70 gr.
S eer HP #1205, 75 gr.
Speer SP #1211, 80 gr.
Sierra HPBT #1530, 85 gr.
Hornady V-Max #22440, 87 gr.
Hornady BTSP #2453, 100 gr.
Cast Bullets Used. . . . . .. (sized to .243" dia)
*gas check bullets *#245496, 84 gr.

**Test Specifications: (Velocity & Pressure)**

Firearm Used . . . . . .Universal Receiver
Barrel Length . . . . . .24"
Twist . . . . . .1-9"
Groove Dia. . . . . ..243"

**60 gr. Jacketed HP** — 2.750" OAL — BC: .182 SD: .145

| Powder | Sugg Starting Grains | Velocity fps | Pressure C.U.P. | Max Load Grains | Velocity fps | Pressure C.U.P. |
|---|---|---|---|---|---|---|
| XMR-2015 | 35.4 | 3374 | 42,700 | 39.5 | 3682 | 51,360 |
| IMR-3031 | 37.0 | 3290 | 39,400 | 41.5 | 3677 | 50,400 |
| IMR-4895 | 38.0 | 3279 | 42,400 | 42.5 | 3623 | 51,200 |
| IMR-4064 | 38.0 | 3164 | 36,900 | 44.0 | 3759 | 52,800 |
| Varget | 39.0 | 3456 | 40,200 | 43.5 | 3700 | 49,600 |
| AA-2520 | 38.0 | 3454 | 42,100 | 42.5 | 3700 | 47,300 |
| IMR-4320 | 39.0 | 3194 | 39,900 | 44.5 | 3663 | 52,400 |
| N140 | 38.5 | 3328 | 41,000 | 43.0 | 3673 | 49,000 |
| H-380 | 40.0 | 3279 | 37,700 | 46.5 | 3759 | 52,000 |
| **IMR-4350** | 42.0 | 3021 | 36,400 | **49.0+** | **3623** | **52,000** |
| H-4831 | 46.0 | 3154 | 39,000 | 50.5+ | 3497 | 48,800 |

**70 gr. Jacketed HPBT** — 2.825" OAL — BC: .259 SD: .169

| Powder | Sugg Starting Grains | Velocity fps | Pressure C.U.P. | Max Load Grains | Velocity fps | Pressure C.U.P. |
|---|---|---|---|---|---|---|
| IMR-3031 | 36.0 | 3105 | 36,400 | 41.0 | 3509 | 49,600 |
| IMR-4895 | 37.0 | 3067 | 38,600 | 42.0 | 3448 | 49,600 |
| H-335 | 35.0 | 3308 | 45,900 | 40.0 | 3598 | 52,000 |
| IMR-4064 | 37.5 | 3067 | 35,000 | 43.5 | 3584 | 51,600 |
| Varget | 36.7 | 3261 | 39,300 | 41.0 | 3555 | 49,300 |
| AA2520 | 33.0 | 2875 | 37,700 | 41.0 | 3423 | 49,300 |
| IMR-4320 | 38.5 | 3105 | 40,300 | 44.0 | 3509 | 52,000 |
| N140 | 37.0 | 3248 | 42,300 | 42.3 | 3530 | 51,200 |
| H-380 | 39.0 | 3095 | 36,400 | 45.0 | 3588 | 52,000 |
| 760 | 40.0 | 3222 | 42,800 | 46.0 | 3611 | 50,700 |
| H-414 | 40.0 | 3299 | 40,300 | 46.0 | 3643 | 51,400 |
| **IMR-4350** | 42.0 | 2976 | 38,600 | **48.5+** | **3484** | **51,200** |
| H-4831 | 45.0 | 2967 | 36,400 | 50.5+ | 3413 | 48,800 |

**Note:** Loads shown in shaded panels are maximum.
Loads shown in bold designate potentially most accurate load.
\+ Designates a compressed powder charge.

# 6mm Remington (244 Remington)

### 75 gr. Jacketed HP
2.825" OAL

BC: .234
SD: .181

| Powder | Sugg Starting Grains | Velocity fps | Pressure C.U.P. | Max Load Grains | Velocity fps | Pressure C.U.P. |
|---|---|---|---|---|---|---|
| IMR-3031 | 36.0 | 3105 | 40,300 | 40.5 | 3485 | 50,700 |
| IMR-4895 | 37.0 | 3105 | 40,300 | 39.0 | 3385 | 51,400 |
| H-335 | 36.3 | 3168 | 44,600 | 40.5 | 3424 | 50,800 |
| IMR-4064 | 37.0 | 3048 | 37,300 | 42.5 | 3448 | 51,600 |
| Varget | 36.3 | 3164 | 40,600 | 40.5 | 3457 | 49,400 |
| AA-2520 | 32.0 | 2790 | 40,000 | 40.5 | 3333 | 52,000 |
| IMR-4320 | 37.5 | 2994 | 37,700 | 41.0 | 3400 | 52,000 |
| **N140** | 36.7 | 3092 | 40,600 | **41.0** | **3398** | **50,300** |
| H-380 | 36.0 | 2865 | 34,500 | 43.5 | 3423 | 48,100 |
| IMR-4350 | 41.5 | 2976 | 37,300 | 48.0+ | 3448 | 52,000 |
| XMR-3100 | 42.0 | 2761 | 37,700 | 48.5+ | 3249 | 50,700 |
| H-4831 | 44.0 | 2941 | 37,700 | 48.0+ | 3288 | 45,000 |

### 80 gr. Jacketed SP
2.825" OAL

BC: .365
SD: .194

| Powder | Sugg Starting Grains | Velocity fps | Pressure C.U.P. | Max Load Grains | Velocity fps | Pressure C.U.P. |
|---|---|---|---|---|---|---|
| IMR-3031 | 35.0 | 2994 | 37,300 | 39.5 | 3412 | 50,600 |
| IMR-4895 | 35.8 | 3107 | 44,000 | 40.0 | 3325 | 49,000 |
| IMR-4064 | 36.5 | 2915 | 36,000 | 42.0 | 3390 | 50,400 |
| **Varget** | **35.4** | **3188** | **44,500** | 39.6 | 3364 | 49,400 |
| IMR-4320 | 36.7 | 3122 | 43,700 | 41.0 | 3376 | 49,900 |
| N140 | 35.8 | 3044 | 42,900 | 40.0 | 3301 | 50,400 |
| H-380 | 35.0 | 2785 | 34,500 | 43.0 | 3290 | 50,800 |
| 760 | 41.3 | 3152 | 40,700 | 47.0 | 3467 | 51,800 |
| H-414 | 40.4 | 3209 | 42,600 | 46.0 | 3447 | 48,900 |
| IMR-4350 | 41.0 | 2873 | 36,000 | 47.0+ | 3367 | 52,000 |
| H-4831 | 44.0 | 2890 | 36,400 | 50.5+ | 3322 | 48,400 |
| RX22 | 40.0 | 2922 | 40,600 | 49.0+ | 3294 | 49,600 |

### 85 gr. Jacketed HPBT
2.825" OAL

BC: .282
SD: .206

| Powder | Sugg Starting Grains | Velocity fps | Pressure C.U.P. | Max Load Grains | Velocity fps | Pressure C.U.P. |
|---|---|---|---|---|---|---|
| IMR-3031 | 34.0 | 2906 | 38,100 | 39.0 | 3354 | 52,000 |
| IMR-4895 | 35.0 | 2915 | 39,900 | 40.0 | 3236 | 51,600 |
| IMR-4064 | 36.0 | 2865 | 37,300 | 41.0 | 3279 | 51,200 |
| Varget | 35.8 | 3075 | 43,200 | 40.0 | 3295 | 50,300 |
| IMR-4320 | 36.0 | 2849 | 36,900 | 42.0 | 3268 | 51,200 |
| **N140** | **36.0** | **3020** | **43,600** | 39.5 | 3270 | 51,400 |
| H-380 | 35.0 | 2770 | 37,300 | 41.0 | 3362 | 52,000 |
| 760 | 39.0 | 3055 | 41,100 | 45.0 | 3417 | 51,700 |
| H414 | 38.0 | 3029 | 41,800 | 45.0 | 3436 | 52,000 |
| IMR-4350 | 40.0 | 2808 | 35,500 | 46.5+ | 3300 | 52,000 |
| RX19 | 42.0 | 2836 | 39,100 | 46.5 | 3211 | 50,800 |
| XMR3100 | 42.5 | 2715 | 39,500 | 47.5 | 3130 | 49,900 |
| H-4831 | 44.0 | 2958 | 38,600 | 47.5+ | 3394 | 51,600 |
| RX22 | 44.0 | 2879 | 38,000 | 49.4 | 3301 | 51,900 |

### 87 gr. Jacketed V-Max
2.825" OAL

BC: .400
SD: .210

| Powder | Sugg Starting Grains | Velocity fps | Pressure C.U.P. | Max Load Grains | Velocity fps | Pressure C.U.P. |
|---|---|---|---|---|---|---|
| IMR-3031 | 35.4 | 3031 | 42,600 | 39.0 | 3276 | 50,100 |
| IMR-4064 | 36.0 | 2948 | 37,900 | 40.0 | 3266 | 48,800 |
| Varget | 35.8 | 3034 | 41,800 | 40.0 | 3278 | 50,000 |
| IMR-4320 | 35.8 | 2954 | 39,500 | 40.0 | 3253 | 49,800 |
| 760 | 40.8 | 2993 | 37,200 | 45.5 | 3335 | 50,200 |
| H-414 | 40.5 | 2979 | 38,300 | 45.2 | 3291 | 48,900 |
| N160 | 42.0 | 2987 | 40,000 | 47.0 | 3320 | 50,000 |
| IMR-4350 | 40.0 | 2882 | 36,400 | 44.7 | 3256 | 49,100 |
| **XMR-3100** | 42.6 | 2882 | 37,900 | **47.5+** | **3251** | **51,200** |
| H4831 | 44.0 | 2979 | 39,000 | 49.0+ | 3300 | 49,300 |
| RX22 | 45.0 | 3091 | 40,400 | 50.0+ | 3435 | 50,700 |

### 100 gr. Jacketed BTSP
2.820" OAL

BC: .405
SD: .242

| Powder | Sugg Starting Grains | Velocity fps | Pressure C.U.P. | Max Load Grains | Velocity fps | Pressure C.U.P. |
|---|---|---|---|---|---|---|
| IMR-4064 | 33.8 | 2811 | 38,500 | 38.5 | 3089 | 50,100 |
| AA2520 | 31.0 | 2457 | 39,500 | 37.2 | 2869 | 51,000 |
| H-380 | 34.0 | 2570 | 39,000 | 38.5 | 2865 | 51,600 |
| 760 | 37.8 | 2800 | 39,600 | 43.0 | 3093 | 48,000 |
| H-414 | 36.9 | 2769 | 36,300 | 43.5 | 3122 | 50,500 |
| N160 | 39.0 | 2852 | 45,500 | 43.5 | 3049 | 50,300 |
| IMR-4350 | 37.4 | 2811 | 39,500 | 42.5 | 3143 | 51,100 |
| RX19 | 38.0 | 2559 | 38,100 | 46.0 | 3058 | 51,700 |
| XMR-3100 | 40.0 | 2576 | 39,400 | 45.0 | 2955 | 51,000 |
| H-4831 | 42.0 | 2883 | 44,200 | 47.0+ | 3131 | 50,900 |
| RX22 | 41.5 | 2723 | 38,300 | 46.6+ | 3084 | 50,300 |
| **IMR-7828** | **43.0** | **2841** | **40,900** | 48.0+ | 3149 | 50,300 |
| H-1000 | 45.7 | 2869 | 40,400 | 51.0+ | 3141 | 49,300 |

### #245496
84 gr. (#2 Alloy) 2.690" OAL

BC: .202
SD: .200

| Powder | Sugg Starting Grains | Velocity fps | Pressure C.U.P. | Max Load Grains | Velocity fps | Pressure C.U.P. |
|---|---|---|---|---|---|---|
| Red Dot | 9.0 | 1726 | 30,500 | 11.5 | 1973 | 40,700 |
| 700X | 8.5 | 1635 | 29,400 | 10.7 | 1879 | 40,700 |
| Green Dot | 9.0 | 1703 | 27,600 | 11.5 | 1947 | 39,900 |
| PB | 9.0 | 1642 | 27,600 | 11.0 | 1829 | 38,600 |
| SR-7625 | 9.0 | 1628 | 29,400 | 11.0 | 1818 | 38,600 |
| SR-4756 | 10.0 | 1725 | 29,400 | 12.5 | 1974 | 40,700 |
| SR-4759 | 13.0 | 1661 | 16,100 | 19.5 | 2202 | 34,000 |
| **IMR-4227** | **13.7** | **1711** | **17,300** | 19.7 | 2181 | 28,200 |
| IMR-4198 | 16.8 | 1828 | 17,000 | 21.0 | 2144 | 22,500 |
| RX7 | 14.5 | 1651 | 17,100 | 20.0 | 2117 | 25,800 |
| 748 | 20.8 | 1772 | 14,700 | 26.0 | 2173 | 23,400 |
| H-4895 | 19.6 | 1760 | 16,300 | 24.5 | 2132 | 23,300 |

**Note:** Loads shown in shaded panels are maximum.
Loads shown in bold designate potentially most accurate load.
\+ Designates a compressed powder charge.

# 240 Weatherby Magnum

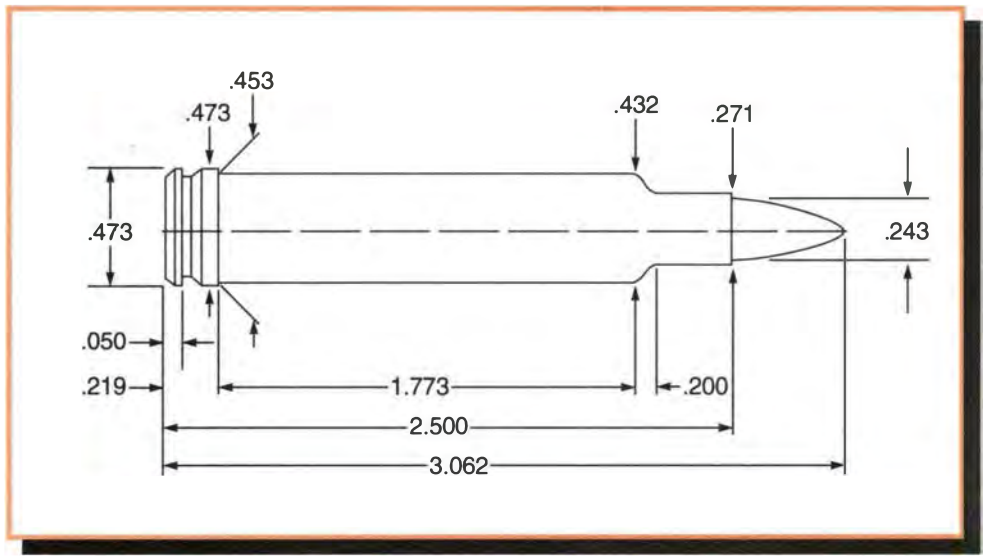


**Comments:**

The 240 Weatherby is very fast, very accurate, and not very popular. Weatherby introduced their 240 Magnum in 1968 as the fastest of the 6mm/243 bore size available in factory form. This cartridge can be thought of as a 30-06 necked down to 6mm, with a belt added to the case. The fact that it is an original case design, which cannot be formed from any other cartridge, has not helped its appeal. The 240 requires slower burning powders for top performance.

IMR-4350 produced best results with bullets up to 90-grains, H-4831 performed best with the 100-grainers. Despite the good availability of .243" diameter varmint bullets, the 240 shouldn't be considered for such as extended shooting would be rough on barrel life. This data is intended for commercially produced and chambered rifles. It is not for use in custom guns which may lack the free bore found in standard Weatherby chambers.

**Test Components:**

Cases . . . . . .Weatherby
Trim-to Length . . . . . .2.490"
Primers . . . . . .Federal 215
Primer Size . . . . . .Large Rifle Magnum
Lyman Shell Holder . . . . . .No. 2
Jacketed Bullets Used . .Hornady V-Max #22420, 75 gr.
Speer SP #1211, 80 gr.
Nosler Partition #16314, 85 gr.
Speer SP #1217, 90 gr.
Hornady BTSP #2453, 100 gr.

**Test Specifications:**
**(Velocity Only)**

Firearm Used . . . . . .Weatherby Mk V
Barrel Length . . . . . .24"
Twist . . . . . .1-10"
Groove Dia. . . . . .243"

**75 gr. Jacketed V-Max** — 3.062" OAL — **BC:** .330 **SD:** .181

| Powder | Sugg Starting Grains | Velocity fps | Pressure | Max Load Grains | Velocity fps | Pressure |
|---|---|---|---|---|---|---|
| H-414 | 46.8 | 3091 | — | 52.0 | 3508 | — |
| N160 | 52.0 | 3444 | — | 54.5 | 3677 | — |
| **IMR-4350** | 50.0 | 3413 | — | **52.5** | **3629** | — |
| RX19 | 48.1 | 3004 | — | 53.5 | 3389 | — |
| H4831SC | 53.0 | 3358 | — | 56.0 | 3522 | — |

**80 gr. Jacketed SP** — 3.062" OAL — **BC:** .365 **SD:** .193

| Powder | Sugg Starting Grains | Velocity fps | Pressure | Max Load Grains | Velocity fps | Pressure |
|---|---|---|---|---|---|---|
| N160 | 50.0 | 3288 | — | 53.5 | 3536 | — |
| **IMR-4350** | **48.0** | **3257** | — | 51.0 | 3462 | — |
| RX19 | 46.8 | 2848 | — | 52.0 | 3264 | — |
| XMR-3100 | 50.4 | 3004 | — | 56.0 | 3422 | — |
| H4831SC | 52.0 | 3246 | — | 55.0 | 3431 | — |

**Note:** Loads shown in shaded panels are maximum.
Loads shown in bold designate potentially most accurate load.

# 240 Weatherby Magnum

**85 gr. Jacketed Partition**
3.062" OAL
**BC:** .315
**SD:** .206

| Powder | Sugg Starting Grains | Velocity fps | Pressure | Max Load Grains | Velocity fps | Pressure |
|---|---|---|---|---|---|---|
| N160 | 49.0 | 3195 | — | 51.5 | 3360 | — |
| IMR-4350 | 48.0 | 3213 | — | 51.0 | 3409 | — |
| **RX19** | 46.8 | 2924 | — | **52.0** | **3296** | — |
| XMR-3100 | 48.6 | 2868 | — | 54.0 | 3280 | — |
| H4831SC | 52.0 | 3219 | — | 54.5 | 3371 | — |

**90 gr. Jacketed SP**
3.062" OAL
**BC:** .385
**SD:** .217

| Powder | Sugg Starting Grains | Velocity fps | Pressure | Max Load Grains | Velocity fps | Pressure |
|---|---|---|---|---|---|---|
| N160 | 47.0 | 3024 | — | 50.0 | 3257 | — |
| **IMR-4350** | **47.0** | **3076** | — | 49.5 | 3265 | — |
| RX19 | 46.0 | 2783 | — | 51.0 | 3142 | — |
| XMR3100 | 48.5 | 2864 | — | 54.0 | 3260 | — |
| H4831SC | 52.0 | 3193 | — | 54.5 | 3355 | — |

**100 gr. Jacketed BTSP**
3.062" OAL
**BC:** .405
**SD:** .242

| Powder | Sugg Starting Grains | Velocity fps | Pressure | Max Load Grains | Velocity fps | Pressure |
|---|---|---|---|---|---|---|
| N160 | 47.0 | 3012 | — | 49.0 | 3125 | — |
| IMR-4350 | 44.0 | 2835 | — | 47.0 | 3047 | — |
| RX19 | 45.0 | 2725 | — | 50.0 | 3072 | — |
| XMR-3100 | 47.0 | 2733 | — | 52.0 | 3103 | — |
| **H4831SC** | **50.0** | **3082** | — | 53.0 | 3241 | — |
| RX22 | 48.0 | 2930 | — | 51.0 | 3135 | — |

**Note:** Loads shown in shaded panels are maximum.
Loads shown in bold designate potentially most accurate load.

# 25-20 Winchester (25WCF)

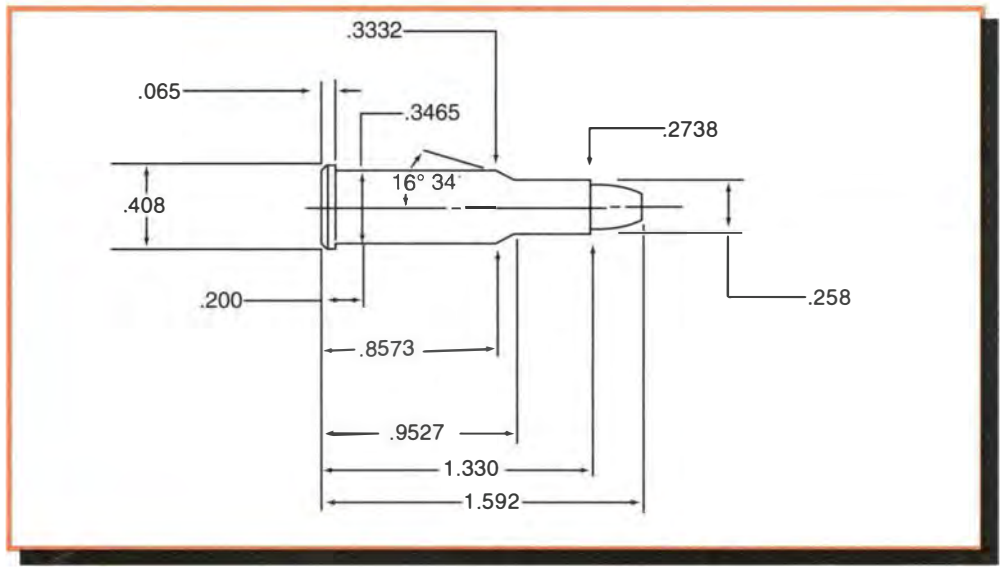


**Comments:**

This data is not for use in old firearms designed for black powder. It is intended only for use in firearms designed for smokeless powder loads and in good condition.

When loading for tubular magazines you must use flat, blunt or round nose bullets. It is suggested that a light crimp be employed in ammo assembly for cartridges that will be used in a tubular magazine.

IMR 4198 is a good first powder choice. Data is brief due to the limited popularity of the cartridge.

**Test Components:**

Cases . . . . . .Remington, Winchester
Trim-to Length . . . . . .1.320"
Primers . . . . . .Remington 6½, Win. WSR
Primer Size . . . . . .Small Rifle
Lyman Shell Holder . . . . . .No. 10
Jacketed Bullets Used . . .Remington SP #22735, 86 gr.

Cast bullets used . . . . . .(sized to .257)
*gas check bullet *257420, 65 gr.

**Test Specifications:**
**(Velocity Only)**

Firearm Used . . . . . .Winchester Model 92
Barrel Length . . . . . .20"+24"
Twist . . . . . .1-14"
Groove Dia. . . . . ..256"

**86 gr. Jacketed SP** — 1.592" OAL — **BC:** .191 **SD:** .186

| Powder | Sugg Starting Grains | Velocity fps | Pressure | Max Load Grains | Velocity fps | Pressure |
|---|---|---|---|---|---|---|
| Unique | 4.5 | 1219 | — | 5.5 | 1508 | — |
| 2400 | 7.0 | 1150 | — | 9.0 | 1610 | — |
| IMR-4227 | 8.0 | 1213 | — | 10.7 | 1713 | — |
| **IMR-4198** | **10.5** | **1283** | — | 13.0+ | 1751 | — |
| H-110 | 7.0 | 1060 | — | 8.0 | 1294 | — |

***257420** — 65 gr. (#2 Alloy) 1.560" OAL — **BC:** .129 **SD:** .140

| Powder | Sugg Starting Grains | Velocity fps | Pressure C.U.P. | Max Load Grains | Velocity fps | Pressure C.U.P. |
|---|---|---|---|---|---|---|
| Red Dot | 3.5 | 1320 | — | 4.5 | 1560 | — |
| 700X | 3.5 | 1345 | — | 4.5 | 1580 | — |
| Green Dot | 4.0 | 1400 | — | 5.0 | 1665 | — |
| PB | 4.0 | 1360 | — | 5.0 | 1605 | — |
| Unique | 4.5 | 1455 | — | 6.0 | 1805 | — |
| SR-7625 | 4.5 | 1480 | — | 5.5 | 1700 | — |

**Note:** Loads shown in shaded panels are maximum.
Loads shown in bold designate potentially most accurate load.
+ Designates a compressed powder charge.
* Fired in a 24" barrel with Winchester cases and primers.

# 250 Savage (250/3000 Savage)

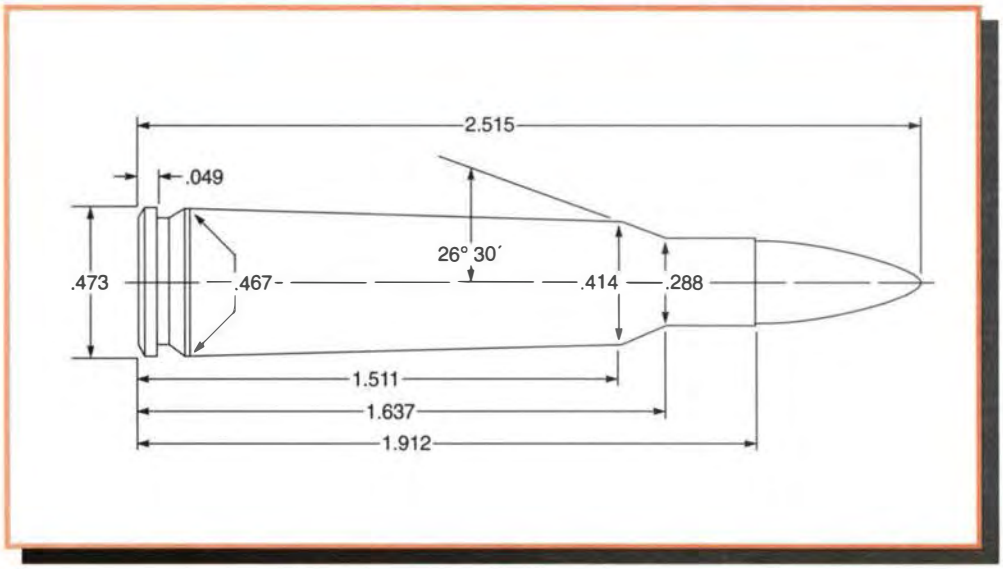


**Comments:**

This cartridge is extremely accurate, but the proper length (weight) bullets must be selected. Early firearms had a 1 in 14" twist because the only factory bullet weight was 87 grains (at 3000 fps.) for the cartridges original name (250/3000). In these barrels 100 grain bullets seldom perform well. When the 100 grain bullet was introduced a twist rate of 1 -10" was adopted. This twist often works with bullets as light as 75 grains and as heavy as 117 grains.

Due to the cases small volume the 100 grain bullet is the best for light big game. Be sure to select a big game style bullet as some 100 grain bullets are of the varmint type. Due to the limited ballistics of the cartridge it would be wise to select a premium grade bullet to optimize performance on light big game.

IMR 3031 is the best choice for accuracy in most rifles with all bullet weights.

When loading for lever action rifles use extra caution in developing a maximum load. Many lever actions will not allow the listed maximum load to be used safely.

**Test Components:**

Cases . . . . . .Remington
Trim-to Length . . . . . .1.902"
Primers . . . . . .Remington 9½
Primer Size . . . . . .Large Rifle
Lyman Shell Holder . . . . . .No. 2
Jacketed Bullets Used . . . . . .Sierra HP #1600, 75 gr.
Speer SP #1241, 87 gr.
Sierra SP #1620, 100 gr.
Sierra SP #1640, 117 gr.

**Test Specifications:**
**(Velocity & Pressure)**

Firearm Used . . . . . .Universal Receiver
Custom Mauser 98
Barrel Length . . . . . .24"
Twist . . . . . .1-14"
Groove Dia. . . . . ..257"

**75 gr. Jacketed HP**
2.450" OAL
**BC:** .189
**SD:** .162

| Powder | Sugg Starting Grains | Velocity fps | Pressure C.U.P. | Max Load Grains | Velocity fps | Pressure C.U.P. |
|---|---|---|---|---|---|---|
| IMR-3031 | 32.0 | 3003 | — | 36.0 | 3472 | — |
| BL-C (2) | 35.0 | 2985 | — | 39.0 | 3300 | — |
| H-335 | 33.0 | 2793 | — | 37.0 | 3058 | — |
| **IMR-4895** | **32.0** | **2612** | **35,700** | 36.0 | 3023 | 44,400 |
| IMR-4064 | 34.0 | 2906 | — | 38.0+ | 3322 | — |
| Varget | 34.0 | 2734 | 33,300 | 38.0+ | 3175 | 44,300 |
| IMR-4320 | 32.0 | 2636 | 36,500 | 36.0 | 2983 | 44,600 |
| N140 | 32.0 | 2669 | 34,500 | 36.0 | 3034 | 43,900 |
| RX15 | 33.0 | 2701 | 33,700 | 37.0 | 3051 | 43,900 |
| H-380 | 38.0 | 2967 | — | 42.0+ | 3164 | — |

**87 gr. Jacketed SP**
2.450" OAL
**BC:** .300
**SD:** .188

| Powder | Sugg Starting Grains | Velocity fps | Pressure C.U.P. | Max Load Grains | Velocity fps | Pressure C.U.P. |
|---|---|---|---|---|---|---|
| IMR-3031 | 31.0 | 2840 | — | 35.0 | 3247 | — |
| BL-C(2) | 33.5 | 2625 | 34,900 | 37.3 | 2972 | 43,900 |
| H-335 | 33.0 | 2645 | — | 36.0 | 2923 | — |
| IMR-4895 | 31.0 | 2467 | 34,500 | 34.5 | 2882 | 44,200 |
| IMR-4064 | 33.0 | 2816 | — | 37.0+ | 3205 | — |
| Varget | 32.4 | 2576 | 35,100 | 36.0 | 2961 | 43,600 |
| IMR-4320 | 31.0 | 2567 | 36,600 | 34.5 | 2835 | 44,300 |
| N140 | 32.0 | 2670 | 36,600 | 36.0 | 2965 | 44,200 |
| **RX15** | **32.0** | **2681** | **38,100** | 35.7 | 2956 | 44,300 |
| H-380 | 37.0 | 2824 | — | 41.0+ | 3012 | — |

**Note:** Loads shown in shaded panels are maximum.
Loads shown in bold designate potentially most accurate load.
+ Designates a compressed powder charge.

# 250 Savage (250/3000 Savage)

**100 gr. Jacketed SP**
2.515" OAL
**BC:** .330
**SD:** .216

| Powder | Sugg Starting Grains | Velocity fps | Pressure C.U.P. | Max Load Grains | Velocity fps | Pressure C.U.P. |
|---|---|---|---|---|---|---|
| IMR-3031 | 30.0 | 2695 | — | 33.0 | 3012 | — |
| BL-C(2) | 31.0 | 2463 | — | 35.0 | 2801 | — |
| H-335 | 32.0 | 2544 | — | 34.0 | 2702 | — |
| IMR-4895 | 31.0 | 2563 | 36,200 | 34.5 | 2823 | 44,100 |
| IMR-4064 | 31.0 | 2577 | — | 35.5 | 3021 | — |
| Varget | 32.0 | 2587 | 37,900 | 35.5 | 2864 | 45,000 |
| IMR-4320 | 31.0 | 2522 | 37,500 | 34.5 | 2768 | 43,600 |
| **RX15** | **31.0** | **2530** | **38,100** | 34.6 | 2831 | 45,000 |
| H-380 | 35.0 | 2645 | — | 39.0 | 2865 | — |

**117 gr. Jacketed SP**
2.515" OAL
**BC:** .388
**SD:** .253

| Powder | Sugg Starting Grains | Velocity fps | Pressure C.U.P. | Max Load Grains | Velocity fps | Pressure C.U.P. |
|---|---|---|---|---|---|---|
| IMR-3031 | 28.0 | 2444 | — | 31.0 | 2672 | — |
| BL-C(2) | 29.0 | 2283 | — | 32.0 | 2481 | — |
| H-335 | 30.0 | 2369 | — | 32.0 | 2506 | — |
| **IMR-4895** | **28.0** | **2304** | **35,200** | 31.0 | 2577 | 45,000 |
| IMR-4064 | 30.0 | 2463 | — | 33.5 | 2710 | — |
| Varget | 29.0 | 2317 | 38,400 | 32.2 | 2534 | 44,700 |
| IMR-4320 | 28.0 | 2246 | 35,500 | 31.8 | 2506 | 44,900 |
| H-380 | 32.0 | 2427 | — | 36.0 | 2702 | — |
| RX19 | 34.0 | 2254 | 36,100 | 38.0 | 2537 | 44,800 |
| H4831SC | 34.6 | 2228 | 36,800 | 38.5+ | 2489 | 44,500 |

**Note:** Loads shown in shaded panels are maximum.
Loads shown in bold designate potentially most accurate load.
+ Designates a compressed powder charge.

# 257 Roberts

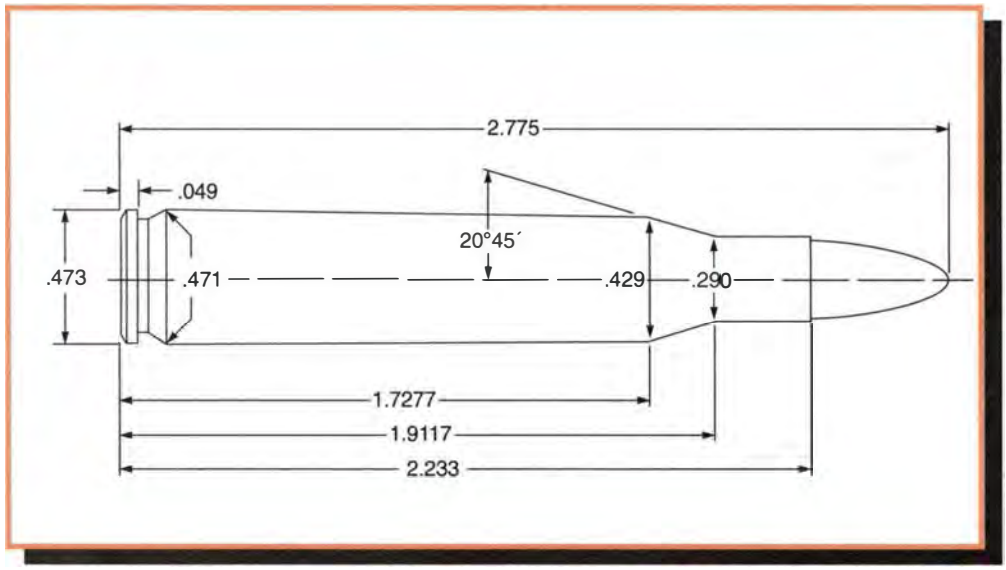


**Comments:**

Noted gun-writer Ned Roberts had experimented with the 7x57mm Mauser cartridge necked down to 25-caliber during the late 1920s and early thirties. Remington introduced the 257 Roberts in 1934 as a standardized version of this wildcat. This was one of the most common deer cartridges before being overshadowed by later developments such as the 243 Winchester. While its popularity has waned over the past few decades, it has had some renewed interest in recent years.

The Roberts is an excellent all-around cartridge, which offers low recoil even in a lightweight rifle. Handloaders can tailor a load for everything from varmints on up to deer sized game. Unfortunately, many older rifles have a long throat while using a short magazine. This can make peak accuracy difficult to attain. Most new rifles have corrected this condition. Shooters may also encounter brass that has two different rim/extractor dimensions. If so, it may be necessary to use two different shell holders. Medium to slower burning powders provide the best accuracy with Varget being perhaps the best choice for all bullet weights.

**Any +P loads listed here should not be used in older guns. They should be used only in modern, recently made rifles approved by the manufacturer for high-pressure +P loads.**

**Test Components:**

Cases . . . . . .Remington
Trim-to Length . . . . . .2.223"
Primers . . . . . .Remington 9½
Primer Size . . . . . .Large Rifle
Lyman Shell Holder . . . . . .No. 2
Jacketed Bullets Used . . . . . .Sierra HP #1600, 75gr.
Speer SP #1241, 87gr.
Sierra SP #1620, 100gr.
Sierra SP #1640, 117gr.

**Test Specifications: (Velocity & Pressure)**

Firearm Used . . . . . .Remington M700 and Universal Receiver
Barrel Length . . . . . .24"
Twist . . . . . .1-10"
Groove Dia. . . . . .257"

**75 gr. Jacketed HP** — 2.735" OAL — **BC:** .189 **SD:** .162

| Powder | Sugg Starting Grains | Velocity fps | Pressure C.U.P. | Max Load Grains | Velocity fps | Pressure C.U.P. |
|---|---|---|---|---|---|---|
| IMR-3031 | 36.0 | 2976 | — | 40.0 | 3311 | — |
| BL-C(2) | 36.0 | 2801 | — | 42.0 | 3311 | — |
| IMR-4895 | 38.0 | 2890 | — | 42.0 | 3268 | — |
| IMR-4064 | 40.0 | 3012 | — | 44.0 | 3509 | — |
| Varget | 39.0 | 2920 | — | 41.0 | 3084 | — |
| IMR-4320 | 38.0 | 2808 | — | 42.0 | 3144 | — |
| AA2700 | 44.0 | 2982 | — | 46.0 | 3143 | — |
| **RX15** | **39.0** | **2967** | — | 41.8 | 3190 | — |
| H-380 | 41.0 | 2906 | — | 45.0 | 3236 | — |
| 760 | 40.2 | 2849 | 33,500 | 45.7 | 3153 | 41,200 |
| H-414 | 42.5 | 3016 | 37,800 | 47.0 | 3330 | 44,900 |
| XMR-4350 | 45.0 | 2728 | — | 47.0 | 2963 | — |

**87 gr. Jacketed SP** — 2.750" OAL — **BC:** .300 **SD:** .188

| Powder | Sugg Starting Grains | Velocity fps | Pressure C.U.P. | Max Load Grains | Velocity fps | Pressure C.U.P. |
|---|---|---|---|---|---|---|
| IMR-3031 | 35.0 | 2840 | — | 39.0 | 3134 | — |
| BL-C(2) | 37.0 | 2824 | — | 41.0 | 3030 | — |
| IMR-4895 | 36.0 | 2724 | — | 40.0 | 3030 | — |
| IMR-4064 | 39.0 | 2932 | — | 43.0 | 3311 | — |
| **Varget** | **38.0** | **2893** | — | 40.2 | 3029 | — |
| IMR-4320 | 36.0 | 2659 | — | 40.0 | 2932 | — |
| AA2700 | 39.5 | 2708 | — | 42.5 | 2853 | — |
| RX15 | 39.0 | 2953 | — | 41.0 | 3101 | — |
| H-380 | 40.0 | 2849 | — | 44.0 | 3086 | — |
| 760 | 41.1 | 2879 | 38,700 | 46.7 | 3092 | 44,200 |
| H-414 | 40.5 | 2896 | 38,500 | 46.0 | 3140 | 44,200 |
| XMR-4350 | 43.0 | 2642 | — | 45.5 | 2814 | — |

**Note:** Loads shown in shaded panels are maximum.
Loads shown in bold designate potentially most accurate load.

# 257 Roberts

**100 gr. Jacketed SP**
2.775" OAL
**BC:** .330
**SD:** .216

| Powder | Sugg Starting Grains | Velocity fps | Pressure C.U.P. | Max Load Grains | Velocity fps | Pressure C.U.P. |
|---|---|---|---|---|---|---|
| IMR-3031 | 34.0 | 2717 | — | 38.0 | 2985 | — |
| BL-C(2) | 36.0 | 2747 | — | 40.0 | 2898 | — |
| IMR-4895 | 34.0 | 2557 | — | 36.5 | 2711 | — |
| IMR-4064 | 36.0 | 2631 | — | 40.0 | 2958 | — |
| **Varget** | **36.0** | **2712** | — | 38.0 | 2841 | — |
| IMR-4320 | 34.0 | 2463 | — | 38.5 | 2793 | — |
| H-380 | 38.0 | 2564 | — | 42.0 | 2857 | — |
| 760 | 38.5 | 2591 | 35,700 | 44.7 | 2928 | 43,200 |
| H-414 | 38.3 | 2683 | 38,000 | 43.5 | 2973 | 45,200 |
| XMR-4350 | 41.0 | 2480 | — | 43.5 | 2654 | — |
| | | | | (+P)46.0 | 2885 | — |
| RX19 | 43.0 | 2644 | — | 45.0 | 2777 | — |
| | | | | (+P)47.5 | 2967 | — |
| XMR-3100 | 43.7 | 2552 | — | 46.0 | 2736 | — |

**117 gr. Jacketed SP**
2.775" OAL
**BC:** .388
**SD:** .253

| Powder | Sugg Starting Grains | Velocity fps | Pressure C.U.P. | Max Load Grains | Velocity fps | Pressure C.U.P. |
|---|---|---|---|---|---|---|
| IMR-3031 | 30.0 | 2341 | — | 33.0 | 2551 | — |
| BL-C(2) | 32.0 | 2380 | — | 35.0 | 2564 | — |
| IMR-4895 | 31.0 | 2288 | — | 34.0 | 2493 | — |
| IMR-4064 | 32.0 | 2347 | — | 36.0 | 2610 | — |
| **Varget** | 33.0 | 2449 | — | **35.0** | **2565** | — |
| IMR-4320 | 33.0 | 2369 | — | 36.0 | 2595 | — |
| H-380 | 34.0 | 2325 | — | 38.0 | 2544 | — |
| 760 | 36.3 | 2319 | 34,300 | 41.2 | 2688 | 44,800 |
| H-414 | 35.0 | 2394 | 36,500 | 39.7 | 2706 | 45,100 |
| XMR-4350 | 40.0 | 2444 | — | 42.5 | 2587 | — |
| | | | | (+P)44.0 | 2729 | — |
| XMR-3100 | 41.8 | 2445 | — | 44.0 | 2640 | — |
| RX22 | 42.0 | 2468 | — | 44.0 | 2580 | — |
| | | | | (+P)45.5 | 2655 | — |

**Note:** Loads shown in shaded panels are maximum.
Loads shown in bold designate potentially most accurate load.

# 25-06 Remington

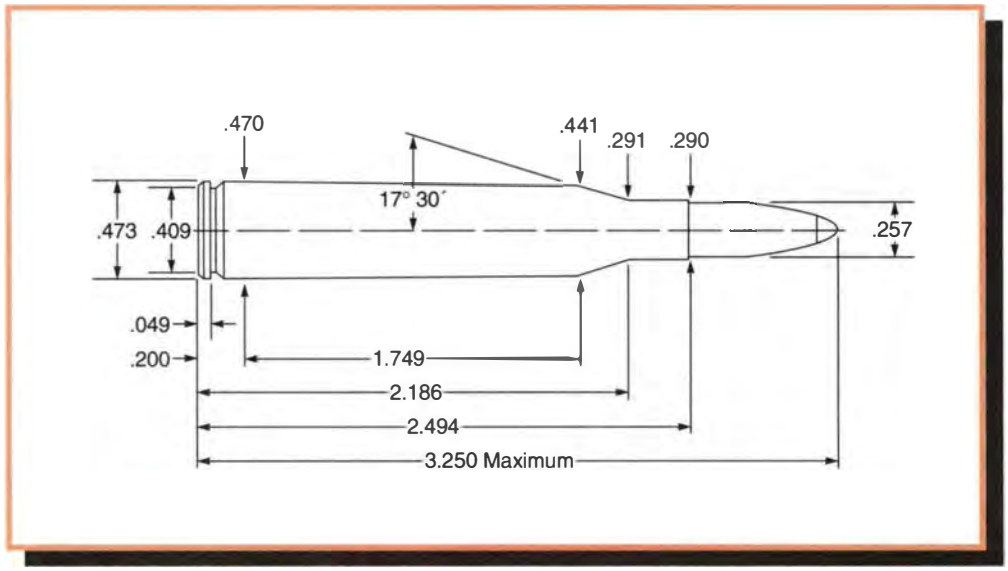


**Comments:**

Gunmaker Adolph O. Niedner first necked down the 30-06 to accept .257" diameter bullets during the 1920s. However, the slow burning powders necessary to maximize the performance of this round were simply not available at the time. The lack of such powders handicapped many wildcat cartridges based on 30-06 cartridges necked down to smaller calibers. The post-World War Two availability of propellants such as H-4831 and IMR-4350 changed all this. Such "over-bore" cartridges now became viable. The 25-06 was a rather popular wildcat for many years before Remington legitimized it as a factory offering in 1969. This data is intended for use in standard commercial rifles originally chambered for this round. Shooters may occasionally encounter custom chambered rifles built before the 25-06 became standardized. If in doubt, a chamber cast by a qualified gunsmith is in order to verify chamber dimensions.

**Test Components:**

Cases . . . . . .Remington
Trim-to Length . . . . . .2.484"
Primers . . . . . .Winchester WLR
Primer Size . . . . . .Large Rifle
Lyman Shell Holder . . . . . .No. 2
Jacketed Bullets Used . . . . . .Sierra HP #1600, 75 gr.
Hornady SP, #2530, 87 gr.
Sierra SP #1620, 100 gr.
Sierra SP #1640, 117 gr.
Hornady HP #2560, 120 gr.

**Test Specifications:**
**(Velocity & Pressure)**

Firearm Used . . . . . .Universal Receiver
Barrel Length . . . . . .26"
Twist . . . . . .1-10"
Groove Dia. . . . . .257"

**75 gr. Jacketed HP** — 3.065" OAL — **BC:** .189 **SD:** .162

| Powder | Sugg Starting Grains | Velocity fps | Pressure C.U.P. | Max Load Grains | Velocity fps | Pressure C.U.P. |
|---|---|---|---|---|---|---|
| IMR-3031 | 43.0 | 3304 | 42,400 | 48.0 | 3632 | 49,600 |
| IMR-4895 | 43.5 | 3170 | 42,000 | 49.0 | 3595 | 50,800 |
| **IMR-4064** | 45.0 | 3304 | 42,000 | **51.0** | **3740** | **52,800** |
| Varget | 45.5 | 3288 | 40,300 | 50.5 | 3667 | 46,200 |
| IMR-4320 | 45.0 | 3199 | 40,700 | 51.5 | 3671 | 52,400 |
| AA2700 | 49.5 | 3375 | 41,200 | 55.0 | 3689 | 50,100 |
| H-380 | 47.0 | 3373 | 42,900 | 52.0 | 3663 | 51,200 |
| 760 | 50.6 | 3160 | 39,300 | 57.5 | 3608 | 51,800 |
| H-414 | 51.3 | 3477 | 45,000 | 57.0 | 3671 | 48,600 |
| IMR-4350 | 50.0 | 3128 | 41,600 | 56.5 | 3575 | 52,000 |
| H4831 | 53.0 | 3105 | 41,100 | 59.0+ | 3559 | 52,400 |

**87 gr. Jacketed SP** — 3.096" OAL — **BC:** .322 **SD:** .188

| Powder | Sugg Starting Grains | Velocity fps | Pressure C.U.P. | Max Load Grains | Velocity fps | Pressure C.U.P. |
|---|---|---|---|---|---|---|
| IMR-3031 | 42.0 | 3113 | 41,600 | 47.0 | 3452 | 50,800 |
| IMR-4064 | 44.0 | 3153 | 42,900 | 49.0 | 3485 | 50,800 |
| Varget | 43.0 | 3304 | 42,800 | 48.0 | 3598 | 50,400 |
| IMR-4320 | 44.0 | 3080 | 41,100 | 49.5 | 3420 | 51,200 |
| RX15 | 43.0 | 2943 | 35,000 | 48.0 | 3554 | 48,800 |
| H-380 | 45.0 | 3111 | 41,600 | 50.0 | 3436 | 52,400 |
| H-414 | 46.4 | 3210 | 43,400 | 51.5 | 3447 | 48,700 |
| **IMR-4350** | **49.0** | **3078** | **41,100** | 55.0 | 3492 | 52,800 |
| RX19 | 50.5 | 2963 | 36,000 | 58.0 | 3509 | 50,400 |
| XMR-3100 | 52.0 | 3011 | 37,200 | 58.0 | 3454 | 50,600 |
| H-4831 | 52.0 | 3015 | 40,300 | 58.0+ | 3407 | 50,400 |

**Note:** Loads shown in shaded panels are maximum.
Loads shown in bold designate potentially most accurate load.
\+ Designates a compressed powder charge.

# 25-06 Remington

**100 gr. Jacketed SP**
3.155" OAL
**BC:** .330
**SD:** .216

| Powder | Sugg Starting Grains | Velocity fps | Pressure C.U.P. | Max Load Grains | Velocity fps | Pressure C.U.P. |
|---|---|---|---|---|---|---|
| IMR-4064 | 40.0 | 2856 | 40,300 | 44.5 | 3158 | 51,200 |
| IMR-4320 | 41.0 | 2822 | 41,600 | 46.5 | 3139 | 50,800 |
| H-380 | 43.0 | 2951 | 45,900 | 47.5 | 3141 | 51,600 |
| **IMR-4350** | 46.5 | 2622 | 37,300 | **52.0** | **3202** | **50,400** |
| RX19 | 51.0 | 2956 | 40,600 | 57.0 | 3307 | 51,100 |
| XMR-3100 | 51.0 | 2878 | 40,000 | 57.0 | 3243 | 50,700 |
| RX22 | 52.7 | 3024 | 42,800 | 58.5+ | 3309 | 50,100 |
| H1000 | 55.8 | 2933 | 38,300 | 62.0+ | 3260 | 48,500 |

**117 gr. Jacketed SP**
3.155" OAL
**BC:** .388
**SD:** .253

| Powder | Sugg Starting Grains | Velocity fps | Pressure C.U.P. | Max Load Grains | Velocity fps | Pressure C.U.P. |
|---|---|---|---|---|---|---|
| IMR-4064 | 37.1 | 2566 | 40,300 | 42.4 | 2866 | 49,600 |
| H-380 | 41.0 | 2681 | 43,300 | 44.5 | 2843 | 51,200 |
| IMR-4350 | 46.0 | 2735 | 41,600 | 51.0 | 3013 | 50,400 |
| RX19 | 48.2 | 2807 | 43,200 | 53.5 | 3058 | 50,100 |
| XMR-3100 | 49.0 | 2675 | 40,500 | 54.3 | 3013 | 49,600 |
| H-4831 | 49.0 | 2772 | 42,600 | 53.5 | 2996 | 50,000 |
| RX22 | 48.2 | 2863 | 46,800 | 53.5 | 3014 | 50,400 |
| IMR-7828 | 49.5 | 2773 | 43,800 | 55.0 | 3019 | 50,600 |
| **H1000** | 52.2 | 2758 | 40,000 | **58.0** | **3038** | **49,600** |

**120 gr. Jacketed HP**
3.250" OAL
**BC:** .394
**SD:** .260

| Powder | Sugg Starting Grains | Velocity fps | Pressure C.U.P. | Max Load Grains | Velocity fps | Pressure C.U.P. |
|---|---|---|---|---|---|---|
| IMR-4064 | 40.0 | 2715 | 43,500 | 44.5 | 2916 | 50,200 |
| IMR-4350 | 44.4 | 2631 | 39,200 | 50.5 | 2963 | 50,600 |
| **RX19** | **48.0** | **2793** | **41,900** | 53.5 | 3051 | 50,500 |
| XMR-3100 | 49.0 | 2715 | 42,000 | 54.0 | 3009 | 52,000 |
| H-4831 | 48.0 | 2781 | 43,500 | 53.5 | 2962 | 50,700 |
| RX22 | 46.8 | 2826 | 47,000 | 52.0 | 2950 | 49,000 |
| IMR-7828 | 49.5 | 2723 | 41,400 | 55.0 | 3009 | 50,500 |
| H1000 | 51.3 | 2787 | 42,600 | 57.0 | 2996 | 49,900 |

**Note:** Loads shown in shaded panels are maximum.
Loads shown in bold designate potentially most accurate load.
\+ Designates a compressed powder charge.

# 257 Weatherby Magnum

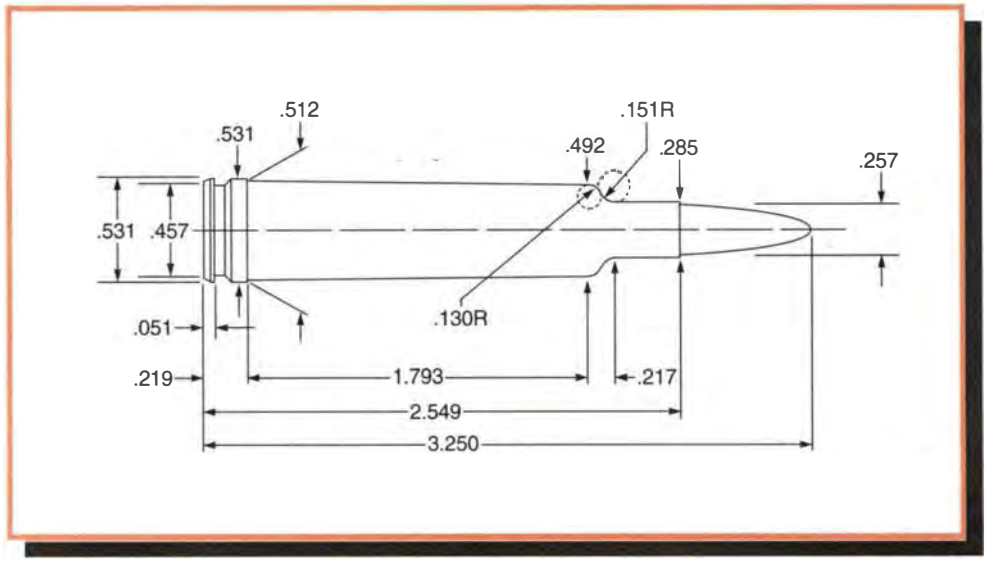


**Comments:**

The 257 Weatherby Magnum is about as much power as one can get in the 25 caliber rifle. It is one of the original Weatherby cartridges developed around 1944 based on the 300 H&H case. Careful handloading can wring around 200 feet per second over the 25-06. It has never been one of Weatherby's more popular offerings despite its impressive performance. This performance level predictably requires use of premium bullets such as the 115-grain Ballistic Silvertip for larger game. The 75 and 87-grain bullets are best left to varmints and smaller game. The "overbored" nature of the 257 mandates the use of slow burning powders. H-4831 has long been the powder of choice and Reloder 25 provided best results with the 115-grain bullet. Shooters should not overheat barrels with extended firing and prevent fouling from accumulating through proper cleaning. This data is intended for commercially produced and chambered rifles. It is not for use in custom guns that may lack the free bore found in standard Weatherby chambers.

**Test Components:**

Cases . . . . . .Weatherby
Trim-to Length . . . . . .2.540"
Primers . . . . . .Federal 215
Primer Size . . . . . .Large Rifle Magnum
Lyman Shell Holder . . . . . .No. 13
Jacketed Bullets Used . . . . . .Sierra HP #1600, 75 gr.
Hornady SP #2530, 87 gr.
Sierra SBT #1620, 100 gr.
Nosler Ballistic Silvertip #51050, 115 gr.

**Test Specifications:**
**(Velocity Only)**

Firearm Used . . . . . .Weatherby Mk V
Barrel Length . . . . . .26"
Twist . . . . . .1-12"
Groove Dia. . . . . .257"

**75 gr. Jacketed HP** — 3.025" OAL — **BC:** .189 **SD:** .162

| Powder | Sugg Starting Grains | Velocity fps | Pressure | Max Load Grains | Velocity fps | Pressure |
|---|---|---|---|---|---|---|
| IMR-4064 | 55.0 | 3367 | — | 61.0 | 3745 | — |
| IMR-4320 | 57.0 | 3460 | — | 63.0 | 3875 | — |
| H-380 | 62.0 | 3472 | — | 68.0 | 3952 | — |
| **IMR-4350** | 64.0 | 3390 | — | **71.0** | **4048** | — |
| XMR-3100 | 69.0 | 3582 | — | 73.0 | 3883 | — |
| H-4831 | 68.0 | 3367 | — | 75.0 | 3891 | — |
| RX22 | 72.0 | 3661 | — | 75.5 | 3975 | — |

**87 gr. Jacketed SP** — 3.185" OAL — **BC:** .322 **SD:** .188

| Powder | Sugg Starting Grains | Velocity fps | Pressure | Max Load Grains | Velocity fps | Pressure |
|---|---|---|---|---|---|---|
| IMR-4064 | 52.0 | 3125 | — | 58.0 | 3521 | — |
| IMR-4320 | 54.0 | 3290 | — | 60.0 | 3597 | — |
| H-380 | 60.0 | 3401 | — | 66.0 | 3690 | — |
| IMR-4350 | 62.0 | 3279 | — | 69.0 | 3759 | — |
| XMR-3100 | 65.0 | 3258 | — | 69.0 | 3541 | — |
| **H-4831** | 66.0 | 3184 | — | **73.0** | **3731** | — |
| RX22 | 69.0 | 3452 | — | 73.0 | 3689 | — |
| IMR-7828 | 71.0 | 3550 | — | 74.5+ | 3762 | — |

**Note:** Loads shown in shaded panels are maximum.
Loads shown in bold designate potentially most accurate load.
+ Designates a compressed powder charge.

# 257 Weatherby Magnum

**100 gr. Jacketed SBT**
3.250" OAL
**BC:** .355
**SD:** .216

| Powder | Sugg Starting Grains | Velocity fps | Pressure | Max Load Grains | Velocity fps | Pressure |
|---|---|---|---|---|---|---|
| IMR-4064 | 50.0 | 2898 | — | 56.0 | 3279 | — |
| IMR-4320 | 52.0 | 3021 | — | 58.0 | 3390 | — |
| H-380 | 58.0 | 3086 | — | 63.0 | 3367 | — |
| **IMR-4350** | 59.0 | 3048 | — | **66.0** | **3472** | — |
| XMR-3100 | 65.5 | 3227 | — | 69.0 | 3467 | — |
| H-4831 | 63.0 | 2923 | — | 70.0 | 3436 | — |
| RX22 | 65.0 | 3237 | — | 69.0 | 3430 | — |
| IMR-7828 | 70.0 | 3445 | — | 73.0 | 3659 | — |
| RX25 | 71.0 | 3322 | — | 75.0 | 3630 | — |

**115 gr. Jacketed BT**
3.250" OAL
**BC:** .453
**SD:** .249

| Powder | Sugg Starting Grains | Velocity fps | Pressure | Max Load Grains | Velocity fps | Pressure |
|---|---|---|---|---|---|---|
| IMR-4831 | 60.0 | 3039 | — | 64.0 | 3247 | — |
| XMR-3100 | 63.2 | 3099 | — | 66.5 | 3294 | — |
| H4831 | 63.0 | 3036 | — | 66.0 | 3209 | — |
| RX22 | 61.5 | 3049 | — | 64.5 | 3158 | — |
| IMR-7828 | 66.5 | 3212 | — | 70.0 | 3392 | — |
| **RX25** | 67.0 | 3069 | — | **71.0** | **3327** | — |
| H870 | 72.0 | 2775 | — | 76.0 | 3058 | — |

**Note:** Loads shown in shaded panels are maximum.
Loads shown in bold designate potentially most accurate load.

# 260 Remington

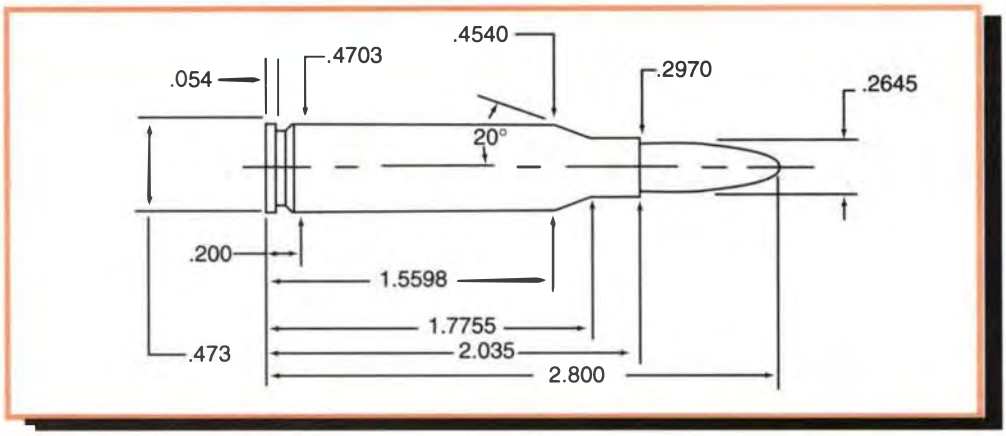


**Comments:**

Many High-Power shooters have used a number of 6.5mm wildcats over recent years to great effect. Various 6.5 wildcats based on the 308 Winchester case had been around for years before Remington standardized the 260 as a factory round in 1997. While ballistically similar to the 6.5x55 Swedish Mauser cartridge, the 260 enjoys the advantage of being loaded to higher pressures due to the absence of older, weaker actions in this chambering. An ideal package of low recoil, high accuracy potential, plus a wide selection of match grade and hunting bullets with good ballistic coefficients offer a very useful combination. The ability to launch the 120-grain Nosler Ballistic Tip at 2,900 feet per second makes a handy whitetail cartridge at the closer "non-magnum" distances found along the east coast. High Power shooters should find the 142-grain Sierra Match King with IMR-4350 a winner. Shooters loading for custom rifles marked 6.5-08, 6.5-308, or any similarly designated rifle — especially semi-autos — should exercise caution as minor dimensional variations can be encountered in such custom chambers. If in doubt, a chamber cast by a competent gunsmith is recommended. Laboratory tests showed good results with most of the VihtaVuori powders as well as Varget and IMR-4350.

**Test Components:**

Cases . . . . . .Remington
Trim-to Length . . . . . .2.025"
Primers . . . . . .Remington 9½
Primer Size . . . . . .Large Rifle
Lyman Shell Holder . . . . . .No. 2
Jacketed Bullets Used . . . . . .Sierra HP #1700, 85 gr.
Hornady V-Max #22601, 95 gr.
Sierra HP #1710, 100 gr.
Nosler Ballistic Tip #26120, 120 gr.
Hornady A-Max #26332, 140 gr.
Sierra HPBT #1742, 142 gr.
Hornady RN #2640, 160 gr.
Cast Bullets Used . . . . . .(sized to .264" dia)
*gas check bullets *#266469, 140 gr.
*#266673, 150 gr.

**Test Specifications: (Velocity & Pressure)**

Firearm Used . . . . . .Universal Receiver
Barrel Length . . . . . .24"
Twist . . . . . .1-9"
Groove Dia. . . . . .2645"

**85 gr. Jacketed HP** — 2.670" OAL — BC: .225 SD: .174

| Powder | Sugg Starting Grains | Velocity fps | Pressure P.S.I. | Max Load Grains | Velocity fps | Pressure P.S.I. |
|---|---|---|---|---|---|---|
| IMR-4064 | 39.0 | 3022 | 40,000 | 44.0 | 3432 | 58,400 |
| Varget | 39.5 | 3097 | 43,600 | 44.0 | 3443 | 59,700 |
| RX15 | 41.0 | 3084 | 42,800 | 45.5 | 3447 | 59,000 |
| **N150** | 40.5 | 3106 | 46,100 | **45.0** | **3376** | **58,300** |
| AA2700 | 44.0 | 2965 | 38,300 | 49.0 | 3384 | 57,900 |
| 760 | 43.5 | 2988 | 37,200 | 48.5 | 3406 | 55,400 |
| H-414 | 45.0 | 2966 | 38,100 | 50.0 | 3387 | 57,800 |
| IMR-4350 | 44.1 | 2813 | 35,600 | 49.0+ | 3190 | 49,000 |
| RX19 | 46.0 | 2777 | 34,600 | 51.0+ | 3159 | 48,200 |
| IMR-4831 | 44.0 | 2797 | 31,800 | 49.0+ | 3079 | 44,600 |
| XMR-3100 | 44.0 | 2603 | 30,200 | 49.0+ | 2944 | 40,900 |
| WXR | 45.0 | 2716 | 32,000 | 50.0+ | 3055 | 43,500 |

**95 gr. Jacketed V-Max** — 2.785" OAL — BC: .365 SD: .195

| Powder | Sugg Starting Grains | Velocity fps | Pressure P.S.I. | Max Load Grains | Velocity fps | Pressure P.S.I. |
|---|---|---|---|---|---|---|
| IMR-4064 | 38.5 | 2899 | 40,100 | 42.5 | 3309 | 59,500 |
| **Varget** | **38.0** | **2987** | **44,800** | 42.5 | 3287 | 58,900 |
| RX15 | 40.0 | 2964 | 43,400 | 44.0 | 3307 | 59,700 |
| N150 | 39.8 | 2928 | 42,900 | 44.2 | 3217 | 57,800 |
| AA2700 | 43.5 | 2958 | 46,600 | 48.2 | 3228 | 58,900 |
| 760 | 44.0 | 2944 | 40,600 | 48.0 | 3312 | 58,400 |
| H-414 | 44.5 | 2882 | 39,400 | 49.5 | 3275 | 57,500 |
| IMR-4350 | 44.0 | 2832 | 40,000 | 48.0+ | 3197 | 55,200 |
| RX19 | 46.0 | 2804 | 39,400 | 51.0+ | 3172 | 54,100 |
| IMR-4831 | 44.0 | 2736 | 36,000 | 49.0+ | 3114 | 50,600 |
| XMR-3100 | 43.0 | 2542 | 31,300 | 48.0+ | 2914 | 44,600 |
| WXR | 44.0 | 2595 | 31,800 | 49.0+ | 2958 | 44,500 |

**Note:** Loads shown in shaded panels are maximum.
Loads shown in bold designate potentially most accurate load.
+ Designates a compressed powder charge.

# 260 Remington

**100 gr. Jacketed HP**
2.710" OAL
**BC:** .259
**SD:** .205

| Powder | Sugg Starting Grains | Velocity fps | Pressure P.S.I. | Max Load Grains | Velocity fps | Pressure P.S.I. |
|---|---|---|---|---|---|---|
| IMR-4064 | 37.5 | 2846 | 41,500 | 41.5 | 3175 | 57,500 |
| Varget | 37.3 | 2895 | 46,000 | 41.7 | 3161 | 58,200 |
| RX15 | 39.0 | 2905 | 45,400 | 43.0 | 3193 | 59,000 |
| **N150** | 39.3 | 2877 | 46,100 | **43.7** | **3126** | **59,300** |
| AA2700 | 42.0 | 2831 | 43,300 | 46.5 | 3116 | 58,600 |
| 760 | 42.7 | 2886 | 42,300 | 47.5 | 3221 | 58,500 |
| H-414 | 44.0 | 2864 | 42,600 | 49.0 | 3213 | 59,700 |
| IMR-4350 | 43.7 | 2766 | 40,000 | 47.5+ | 3156 | 58,100 |
| RX19 | 45.0 | 2745 | 39,300 | 50.0+ | 3106 | 54,700 |
| IMR-4831 | 44.0 | 2695 | 37,000 | 49.0+ | 3095 | 53,300 |
| XMR-3100 | 44.0 | 2582 | 35,400 | 48.0+ | 2950 | 50,600 |
| WXR | 44.0 | 2610 | 34,300 | 48.5+ | 2958 | 47,500 |

**120 gr. Jacketed Ballistic Tip**
2.785" OAL
**BC:** .458
**SD:** .246

| Powder | Sugg Starting Grains | Velocity fps | Pressure P.S.I. | Max Load Grains | Velocity fps | Pressure P.S.I. |
|---|---|---|---|---|---|---|
| Varget | 36.5 | 2619 | 47,500 | 40.5 | 2844 | 58,500 |
| RX15 | 36.5 | 2648 | 48,900 | 40.5 | 2875 | 59,400 |
| **N150** | 36.5 | 2593 | 48,800 | **40.5** | **2799** | **58,900** |
| AA2700 | 38.7 | 2472 | 41,400 | 43.0 | 2799 | 58,900 |
| 760 | 40.5 | 2603 | 42,300 | 45.0 | 2902 | 58,000 |
| H-414 | 40.7 | 2560 | 41,400 | 45.2 | 2892 | 58,700 |
| IMR-4350 | 41.0 | 2589 | 43,900 | 45.7 | 2900 | 59,100 |
| RX19 | 43.0 | 2594 | 42,500 | 47.7+ | 2894 | 56,800 |
| IMR-4831 | 42.0 | 2570 | 41,500 | 46.5+ | 2889 | 56,600 |
| XMR-3100 | 42.3 | 2458 | 39,600 | 47.0+ | 2754 | 52,900 |
| WXR | 42.0 | 2498 | 39,000 | 47.0+ | 2758 | 49,200 |
| IMR-7828 | 40.5 | 2288 | 33,400 | 45.0+ | 2552 | 43,200 |

**140 gr. Jacketed A-Max**
2.785" OAL
**BC:** .550
**SD:** .287

| Powder | Sugg Starting Grains | Velocity fps | Pressure P.S.I. | Max Load Grains | Velocity fps | Pressure P.S.I. |
|---|---|---|---|---|---|---|
| RX15 | 34.7 | 2399 | 45,800 | 38.5 | 2635 | 58,000 |
| AA2700 | 37.8 | 2383 | 45,400 | 42.0 | 2625 | 58,400 |
| 760 | 38.7 | 2412 | 42,500 | 44.0 | 2714 | 58,700 |
| H-414 | 39.0 | 2413 | 42,800 | 43.0 | 2705 | 58,100 |
| RX19 | 38.3 | 2295 | 38,500 | 42.5+ | 2513 | 46,500 |
| **N160** | 37.5 | 2315 | 42,100 | **41.5+** | **2520** | **50,000** |
| IMR-4350 | 37.5 | 2298 | 39,400 | 41.5+ | 2557 | 51,200 |
| IMR-4831 | 37.5 | 2263 | 37,300 | 41.5+ | 2500 | 46,900 |
| XMR-3100 | 37.0 | 2131 | 34,500 | 41.0+ | 2344 | 42,400 |
| WXR | 38.7 | 2276 | 38,500 | 43.0+ | 2485 | 46,000 |
| IMR-7828 | 36.0 | 2006 | 30,000 | 40.0+ | 2220 | 36,200 |
| H1000 | 38.3 | 2049 | 31,100 | 42.5+ | 2229 | 36,000 |

**142 gr. Jacketed HPBT**
2.800" OAL
**BC:** .580
**SD:** .291

| Powder | Sugg Starting Grains | Velocity fps | Pressure P.S.I. | Max Load Grains | Velocity fps | Pressure P.S.I. |
|---|---|---|---|---|---|---|
| Varget | 34.5 | 2457 | 47,300 | 38.5 | 2669 | 57,400 |
| N540 | 35.5 | 3475 | 46,000 | 39.5 | 2712 | 58,000 |
| N550 | 37.3 | 2469 | 42,900 | 41.5 | 2729 | 56,000 |
| AA2700 | 37.7 | 2477 | 45,200 | 42.0 | 2718 | 55,700 |
| H-414 | 39.0 | 2454 | 42,800 | 43.5 | 2755 | 59,300 |
| IMR-4350 | 39.5 | 2546 | 49,000 | 44.0 | 2760 | 57,800 |
| N160 | 40.5 | 2517 | 45,500 | 45.0 | 2763 | 58,000 |
| **N560** | 42.3 | 2473 | 43,100 | **47.0** | **2749** | **56,600** |
| RX19 | 41.5 | 2557 | 47,200 | 46.0 | 2787 | 57,000 |
| IMR-4831 | 40.5 | 2516 | 45,100 | 45.0 | 2767 | 57,200 |
| H4831SC | 42.3 | 2489 | 45,600 | 47.0 | 2723 | 58,200 |
| RX22 | 43.2 | 2523 | 44,500 | 48.0+ | 2819 | 58,800 |

**160 gr. Jacketed RN**
2.840" OAL
**BC:** .283
**SD:** .328

| Powder | Sugg Starting Grains | Velocity fps | Pressure P.S.I. | Max Load Grains | Velocity fps | Pressure P.S.I. |
|---|---|---|---|---|---|---|
| N160 | 35.5 | 2246 | 52,600 | 39.5 | 2409 | 58,900 |
| RX19 | 39.5 | 2334 | 47,300 | 44.0 | 2561 | 58,500 |
| IMR-4831 | 38.3 | 2301 | 47,400 | 42.5 | 2513 | 58,700 |
| XMR-3100 | 39.3 | 2242 | 47,100 | 43.7 | 2466 | 58,700 |
| **RX22** | 41.0 | 2341 | 47,600 | **45.5** | **2566** | **58,300** |
| WXR | 39.5 | 2347 | 50,800 | 44.0 | 2533 | 59,500 |
| **IMR-7828** | 40.5 | 2287 | 47,100 | **45.0+** | **2514** | **58,800** |
| H1000 | 43.0 | 2310 | 47,600 | 48.0+ | 2524 | 59,000 |

**#266469**
140gr. (#2 Alloy) 2.600" OAL
**BC:** .323
**SD:** .286

| Powder | Sugg Starting Grains | Velocity fps | Pressure P.S.I. | Max Load Grains | Velocity fps | Pressure P.S.I. |
|---|---|---|---|---|---|---|
| SR-4759 | 15.0 | 1633 | 22,300 | 24.0 | 2227 | 55,500 |
| XMP-5744 | 17.0 | 1666 | 20,600 | 25.0 | 2194 | 39,000 |
| **IMR-4198** | **17.0** | **1641** | **18,700** | 28.0 | 2326 | 45,900 |
| RX7 | 18.0 | 1651 | 19,900 | 27.0 | 2198 | 37,900 |
| IMR-3031 | 21.5 | 1661 | 17,500 | 30.0 | 2201 | 31,900 |
| IMR-4895 | 22.0 | 1609 | 16,300 | 32.0 | 2261 | 34,400 |

**Note:** Loads shown in shaded panels are maximum.
Loads shown in bold designate potentially most accurate load.
\+ Designates a compressed powder charge.

# 260 Remington

**#266673**
150gr. (#2 Alloy) 2.800" OAL

**BC:** .305
**SD:** .307

| Powder | Sugg Starting Grains | Velocity fps | Pressure P.S.I. | Max Load Grains | Velocity fps | Pressure P.S.I. |
|---|---|---|---|---|---|---|
| **SR-4759** | **18.0** | **1760** | **30,300** | 25.0 | 2167 | 56,300 |
| XMR-5744 | 18.0 | 1645 | 21,100 | 28.0 | 2243 | 46,400 |
| IMR-4198 | 18.0 | 1624 | 19,700 | 28.0 | 2213 | 45,300 |
| RX7 | 20.0 | 1698 | 21,400 | 30.0 | 2247 | 45,700 |
| IMR-3031 | 23.0 | 1659 | 17,900 | 33.0 | 2266 | 40,200 |
| IMR-4895 | 24.0 | 1658 | 18,200 | 33.0 | 2199 | 35,400 |

**Note:** Loads shown in shaded panels are maximum.
Loads shown in bold designate potentially most accurate load.

# 6.5 x 55mm Swedish Mauser

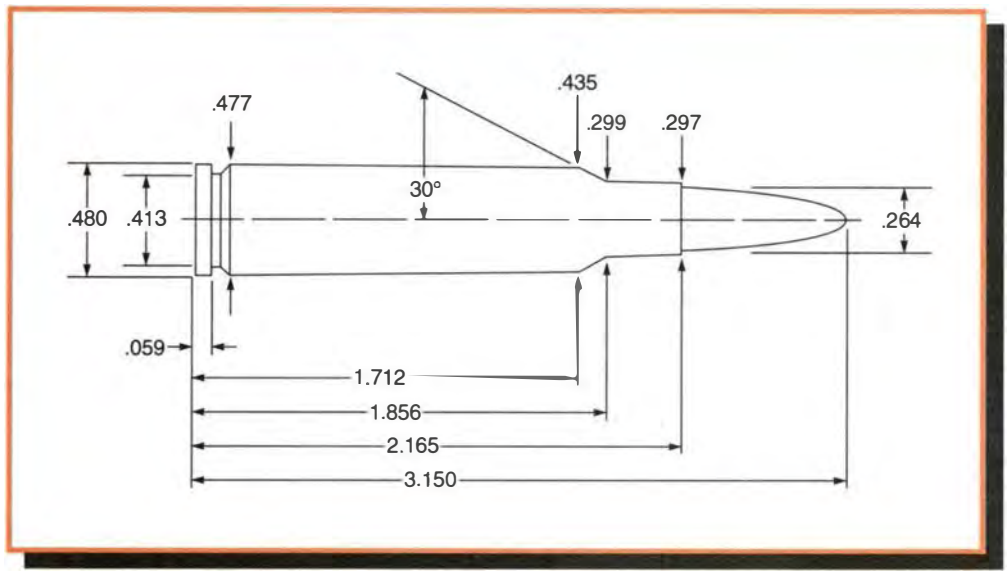


**Comments:**

This was for many years the least known of the Mauser military cartridges to American shooters. Recent importation of large numbers of inexpensive — and well made — Swedish Mausers have popularized this fine old cartridge as never before. The accuracy of many of these rifles rivals that of currently produced factory models. Indeed, most American rifle manufacturers have added this chambering in the past few years. Scandinavian hunters have used this cartridge for many years on game as large as moose as well as a match cartridge. Its combination of excellent accuracy and low recoil have found favor with American shooters as well. The 6.5x55 suffered for many years due to the lack–or great expense–of factory ammo. Shooters loading for the Swede should not under any circumstance attempt to form brass from 30-06 cases. Case diameter of the 30-06 runs .008" to .010" smaller than the Swedish cartridge. Such reformed cases will bulge dramatically when fired, or worse.

All major ammunition manufacturers currently offer loadings for this caliber as well as bulk brass so such case forming operations are unnecessary. Although well made, shooters loading for any of the M94, M96, or M38 Swedish military rifles should work up loads cautiously, observe for pressure signs, and back off accordingly should any arise. The same warning applies to any Norwegian issue Krag-Jorgensen rifle one may be loading for. SAAMI established a Maximum Average Pressure (MAP) of 46,000 CUP in deference to design of these older military actions. Powders in the medium to medium-slow range usually give the best results. IMR-4895 and IMR-4064 usually produce excellent results with bullets up to 140-grains. Many surplus rifles show variation in the groove diameter and the Swedish Mausers are no exception. Shooters should slug their bore and size accordingly.

**Test Components:**

| | |
|---|---|
| Cases | Federal |
| Trim-to Length | 2.155" |
| Primers | Federal 210 |
| Primer Size | Large Rifle |
| Lyman Shell Holder | No. 27 |
| Jacketed Bullets Used | Sierra HP #1710, 100 gr. |
| | Nosler Ballistic Tip #26120, 120 gr. |
| | Hornady SP, #2620, 129 gr. |
| | Sierra HPBT, #1740, 140 gr. |
| | Hornady RN, #2640, 160 gr. |
| Cast Bullets Used | (sized to .264" dia) |
| *gas check bullets | *#266469, 140 gr. |
| | *#266673, 150 gr. |

**Test Specifications:**
**(Velocity Only)**

| | |
|---|---|
| Firearm Used | Swedish Mauser M38 |
| Barrel Length | 24" |
| Twist | 1-7½" |
| Groove Dia. | .264" |

# 6.5 x 55mm Swedish Mauser

**100 gr. Jacketed HP**
2.850" OAL
**BC:** .259
**SD:** .205

| Powder | Sugg Starting Grains | Velocity fps | Pressure | Max Load Grains | Velocity fps | Pressure |
|---|---|---|---|---|---|---|
| IMR-4895 | 39.0 | 2671 | — | 43.5 | 3027 | — |
| IMR-4064 | 39.5 | 2654 | — | 44.0 | 2990 | — |
| Varget | 35.0 | 2351 | — | 39.0 | 2693 | — |
| N150 | 37.0 | 2419 | — | 41.0 | 2745 | — |
| N550 | 39.5 | 2399 | — | 44.0 | 2728 | — |
| AA2700 | 41.5 | 2441 | — | 46.0 | 2790 | — |
| H-414 | 45.0 | 2724 | — | 50.0 | 3034 | — |
| XMR-4350 | 43.0 | 2407 | — | 48.0 | 2784 | — |
| **RX19** | **46.0** | **2612** | — | 51.0+ | 2939 | — |

**129 gr. Jacketed SP**
3.035" OAL
**BC:** .445
**SD:** .264

| Powder | Sugg Starting Grains | Velocity fps | Pressure | Max Load Grains | Velocity fps | Pressure |
|---|---|---|---|---|---|---|
| IMR-4895 | 35.0 | 2301 | — | 39.0 | 2567 | — |
| **IMR-4064** | **36.5** | **2355** | — | 40.5 | 2602 | — |
| H-414 | 39.5 | 2343 | — | 44.0 | 2570 | — |
| N160 | 41.5 | 2353 | — | 46.0 | 2600 | — |
| N560 | 43.5 | 2352 | — | 48.5 | 2603 | — |
| XMR-4350 | 41.0 | 2235 | — | 45.5 | 2547 | — |
| RX19 | 41.5 | 2355 | — | 46.5 | 2615 | — |

**160 gr. Jacketed RN**
3.035" OAL
**BC:** .283
**SD:** .328

| Powder | Sugg Starting Grains | Velocity fps | Pressure | Max Load Grains | Velocity fps | Pressure |
|---|---|---|---|---|---|---|
| H-414 | 37.0 | 2108 | — | 41.0 | 2314 | — |
| N160 | 38.7 | 2125 | — | 43.0 | 2347 | — |
| N560 | 41.5 | 2162 | — | 46.0 | 2370 | — |
| XMR-4350 | 39.5 | 2065 | — | 44.0 | 2330 | — |
| RX19 | 38.7 | 2061 | — | 43.0 | 2317 | — |
| IMR-4831 | 38.7 | 2100 | — | 43.0 | 2339 | — |
| XMR-3100 | 39.5 | 2003 | — | 44.0 | 2269 | — |
| H-4831SC | 41.5 | 2166 | — | 46.0 | 2388 | — |
| **RX22** | 41.5 | 2129 | — | **46.0** | **2361** | — |

**#266673**
150gr. (#2 Alloy) 3.025" OAL
**BC:** .305
**SD:** .307

| Powder | Sugg Starting Grains | Velocity fps | Pressure | Max Load Grains | Velocity fps | Pressure |
|---|---|---|---|---|---|---|
| AA#9 | 13.0 | 1472 | — | 17.0 | 1724 | — |
| 2400 | 13.0 | 1444 | — | 18.0 | 1726 | — |
| **SR-4759** | **16.5** | **1608** | — | 24.0 | 2044 | — |
| IMR-4227 | 17.5 | 1619 | — | 25.0 | 2044 | — |
| XMP-5744 | 18.0 | 1605 | — | 27.0 | 2136 | — |
| IMR-4198 | 18.0 | 1627 | — | 26.0 | 2079 | — |
| RX7 | 18.0 | 1619 | — | 27.0 | 2108 | — |

**120 gr. Jacketed Ballistic Tip**
3.000" OAL
**BC:** .458
**SD:** .246

| Powder | Sugg Starting Grains | Velocity fps | Pressure | Max Load Grains | Velocity fps | Pressure |
|---|---|---|---|---|---|---|
| IMR-4895 | 37.0 | 2474 | — | 41.0 | 2762 | — |
| IMR-4064 | 36.0 | 2406 | — | 40.0 | 2643 | — |
| Varget | 35.0 | 2383 | — | 39.0 | 2606 | — |
| **N150** | 36.5 | 2431 | — | **40.5** | **2652** | — |
| N550 | 39.5 | 2497 | — | 44.0 | 2747 | — |
| AA2700 | 40.0 | 2413 | — | 44.0 | 2652 | — |
| H-414 | 40.0 | 2379 | — | 44.5 | 2664 | — |
| XMR-4350 | 41.5 | 2374 | — | 46.0 | 2657 | — |
| RX19 | 43.0 | 2459 | — | 48.0 | 2740 | — |

**140 gr. Jacketed HPBT**
3.050" OAL
**BC:** .526
**SD:** .287

| Powder | Sugg Starting Grains | Velocity fps | Pressure | Max Load Grains | Velocity fps | Pressure |
|---|---|---|---|---|---|---|
| **IMR-4895** | 32.5 | 2177 | — | **36.5** | **2370** | — |
| IMR-4064 | 33.5 | 2188 | — | 37.5 | 2410 | — |
| Varget | 33.5 | 2251 | — | 37.0 | 2440 | — |
| H-414 | 37.5 | 2222 | — | 41.5 | 2455 | — |
| N160 | 39.5 | 2273 | — | 44.0 | 2512 | — |
| N560 | 42.0 | 2300 | — | 47.0 | 2574 | — |
| IMR-4350 | 37.5 | 2180 | — | 42.0 | 2455 | — |
| XMR-4350 | 39.5 | 2163 | — | 44.0 | 2445 | — |
| RX19 | 40.0 | 2234 | — | 44.5 | 2521 | — |
| XMR-3100 | 41.0 | 2162 | — | 45.5 | 2475 | — |
| H4831SC | 41.5 | 2258 | — | 46.0 | 2508 | — |
| RX22 | 42.3 | 2275 | — | 47.0 | 2576 | — |

**#266469**
140gr. (#2 Alloy) 2.925" OAL
**BC:** .323
**SD:** .286

| Powder | Sugg Starting Grains | Velocity fps | Pressure | Max Load Grains | Velocity fps | Pressure |
|---|---|---|---|---|---|---|
| AA#9 | 12.5 | 1479 | — | 16.5 | 1765 | — |
| 2400 | 12.5 | 1435 | — | 17.0 | 1741 | — |
| SR-4759 | 13.0 | 1375 | — | 25.0 | 2199 | — |
| **IMR-4227** | **17.0** | **1630** | — | 25.0 | 2098 | — |
| XMP-5744 | 18.5 | 1674 | — | 25.5 | 2111 | — |
| IMR-4198 | 15.0 | 1443 | — | 26.0 | 2091 | — |
| RX7 | 15.0 | 1425 | — | 27.0 | 2182 | — |

**Note:** Loads shown in shaded panels are maximum.
Loads shown in bold designate potentially most accurate load.
\+ Designates a compressed powder load.

# 264 Winchester Magnum

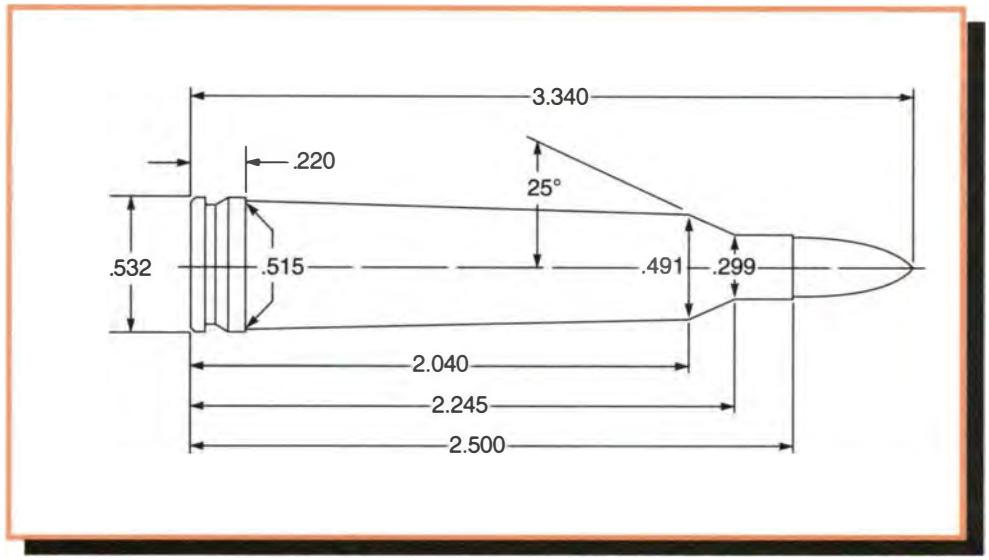


**Comments:**

The 264 Magnum was the smallest of several belted magnums offered by Winchester during the late 1950s. The 264 Winchester Magnum has been regarded by some as ahead of its time. Most American shooters had known the 6.5mm bore size only through ballistically lackluster, foreign military surplus. Its high velocity and flat trajectory necessitated the 26-inch barrel of Winchester's Model 70 Westerner to achieve peak performance. Factory ammunition utilized a unique two-step projectile similar in design to a bore-riding cast bullet.

As with any overbore rifle such as the 264 Winchester, barrel life is an issue. The availability of slow-burning powders for reloading at the time of the 264s introduction was limited. Fortunately, the current selection of powder suitable for the 264 Magnum is quite good and allows the handloader to bring out its full potential. Bullets from after market suppliers are of conventional design and will need to be seated deep in order to clear the rifling.

Remington's introduction of their 7mm Magnum in 1962 immediately outshone the 264 and it never quite recovered. Shooters loading for the 7mm enjoyed a better selection of bullets weighing up to 175-grains. Winchester currently catalogs the 264 as a Custom Shop item.

**Test Components:**

Cases . . . . . .Winchester
Trim-to Length . . . . . .2.490"
Primers . . . . . .Remington 9½ Magnum
Primer Size . . . . . .Large Rifle
Lyman Shell Holder . . . . . .No. 13
Jacketed Bullets Used . . . . .Sierra SBT #1730, 140 gr.

**Test Specifications:**
**(Velocity & Pressure)**

Firearm Used . . . . . .Universal Receiver
Barrel Length . . . . . .24"
Twist . . . . . .1-9"
Groove Dia. . . . . ..264"

**140 gr. Jacketed SBT**
3.340" OAL
**BC:** .495
**SD:** .287

| Powder | Sugg Starting Grains | Velocity fps | Pressure C.U.P. | Max Load Grains | Velocity fps | Pressure C.U.P. |
|---|---|---|---|---|---|---|
| IMR-4831 | 57.5 | 2869 | 48,500 | 60.8 | 2975 | 51,700 |
| H-4831SC | 58.0 | 2824 | 47,500 | 61.0 | 2943 | 54,000 |
| **RX22** | 56.0 | 2770 | 41,600 | **59.0** | **2903** | **46,300** |
| **IMR-7828** | 54.5 | 2662 | 38,600 | **60.5** | **2909** | **46,200** |
| H1000 | 60.0 | 2753 | 44,400 | 63.0 | 2849 | 46,400 |
| RX25 | 60.5 | 2854 | 45,200 | 64.0 | 2959 | 47,200 |
| H50BMG | 66.5 | 2734 | 43,300 | 70.0 | 2874 | 47,600 |
| AA8700 | 69.5 | 2732 | 39,400 | 73.5 | 2883 | 45,800 |

**Note:** Loads shown in shaded panels are maximum.
Loads shown in bold designate potentially most accurate load.

# 270 Winchester

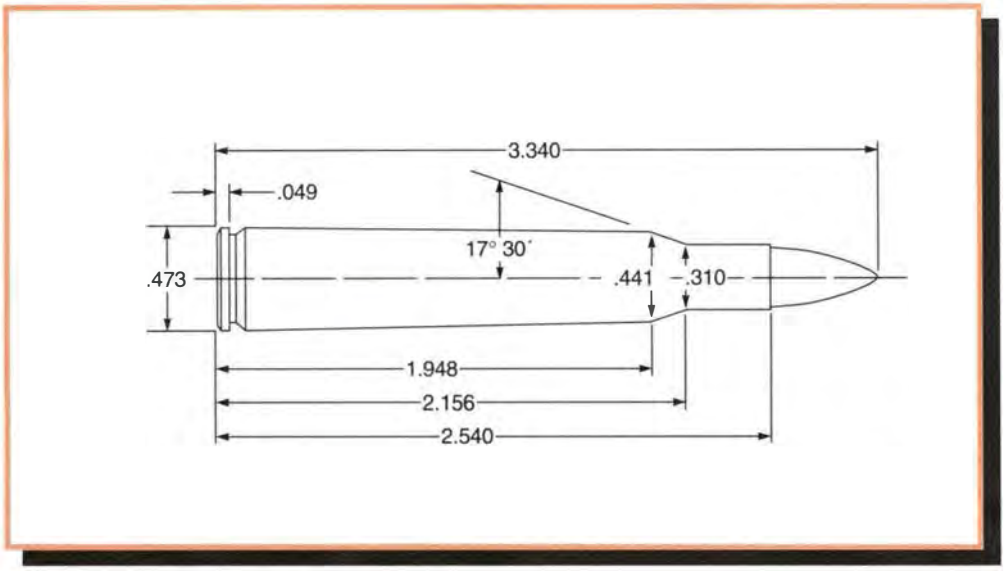


**Comments:**

The 270 Winchester has become one of the classic American rifle cartridges over the last 75 years. It has taken virtually every thin-skinned game imaginable and provides endless debate as one half of the "30-06 Springfield versus 270 Winchester" argument. Indeed, 270 Winchester dies have consistently been among the top three in Lyman's rifle die sales for many years. Winchester introduced the 270 in 1925 in their Model 54 rifle. The cartridge is essentially a necked down 30-06 with minor dimensional changes. The .277" diameter bullet was entirely new to the shooting public. Some sources indicate Winchester may have based this bullet size on an obscure prototype for a Chinese military cartridge dating to the turn of the century.

The 270 Winchester has become synonymous with the late Jack O'Connor of *Outdoor Life* magazine. His untiring advocacy of the 270 Winchester loaded with 130-grain bullets established it as a potent, flat-shooting cartridge suitable most North American hunting situations. Properly loaded, the 270 will do much of what the 30-06 will do on all but the larger species in North America.

**Test Components:**

Cases . . . . . .Winchester
Trim-to Length . . . . . .2.530"
Primers . . . . . .Winchester WLR
Primer Size . . . . . .Large Rifle
Lyman Shell Holder . . . . . .No. 2
Jacketed Bullets Used . . . . . .Sierra HP #1800, 90 gr.
Hornady SP #2710, 100 gr.
Sierra SPT #1810, 110 gr.
Sierra SBT #1820, 130 gr.
Hornady BTSP #2735, 140 gr.
Hornady SP #2740, 150 gr.
Nosler SP, #16324, 160 gr.
Cast Bullets Used . . . . . .(sized to .278" dia)
*gas check bullet *280642, 150 gr.

**Test Specifications: (Velocity & Pressure)**

Firearm Used . . . . . .Universal Receiver
Barrel Length . . . . . .26"
Twist . . . . . .1-10"
Groove Dia. . . . . ..277"

**90 gr. Jacketed HP** — 3.090" OAL — **BC:** .195 **SD:** .168

| Powder | Sugg Starting Grains | Velocity fps | Pressure C.U.P. | Max Load Grains | Velocity fps | Pressure C.U.P. |
|---|---|---|---|---|---|---|
| IMR-4064 | 48.5 | 3032 | 37,700 | 53.8 | 3532 | 51,500 |
| Varget | 48.5 | 3112 | 38,000 | 54.0 | 3536 | 50,300 |
| RX15 | 48.5 | 3142 | 38,700 | 54.0 | 3527 | 49,100 |
| **AA2700** | 50.5 | 3020 | 39,500 | **56.0** | **3401** | **50,500** |
| IMR-4350 | 52.0 | 2883 | 36,800 | 58.0+ | 3376 | 49,900 |
| IMR-4831 | 54.0 | 2907 | 37,400 | 60.0+ | 3416 | 50,200 |

**100 gr. Jacketed SP** — 3.175" OAL — **BC:** .307 **SD:** .186

| Powder | Sugg Starting Grains | Velocity fps | Pressure C.U.P. | Max Load Grains | Velocity fps | Pressure C.U.P. |
|---|---|---|---|---|---|---|
| IMR-4895 | 46.5 | 3134 | 44,600 | 50.0 | 3356 | 53,600 |
| IMR-4064 | 46.0 | 3067 | 40,300 | 51.5 | 3413 | 53,600 |
| Varget | 47.5 | 3071 | 41,200 | 53.0 | 3416 | 50,900 |
| IMR-4320 | 46.0 | 2976 | 39,900 | 51.5 | 3333 | 53,200 |
| RX15 | 48.0 | 2991 | 38,700 | 53.5 | 3364 | 50,300 |
| H-380 | 48.0 | 3086 | 39,900 | 54.0 | 3436 | 54,000 |
| **AA2700** | 50.5 | 3039 | 45,200 | **56.0** | **3353** | **52,000** |
| IMR-4350 | 50.0 | 2949 | 41,100 | 57.0+ | 3345 | 54,400 |
| IMR-4831 | 53.5 | 2763 | 37,000 | 59.5+ | 3254 | 48,000 |
| H4831 | 55.0 | 2702 | 40,300 | 62.0+ | 3356 | 51,600 |
| **SR-4759 | 23.0 | 2279 | 33,900 | 27.3 | 2607 | 39,900 |
| **XMP-5744 | 26.5 | 2326 | 31,200 | 31.3 | 2614 | 36,900 |

**Note:** Loads shown in shaded panels are maximum.
Loads shown in bold designate potentially most accurate load.
+ Designates a compressed powder charge.
** Designates a reduced load.

# 270 Winchester

**110 gr. Jacketed SPT**
3.285" OAL
**BC:** .318
**SD:** .205

| Powder | Sugg Starting Grains | Velocity fps | Pressure C.U.P. | Max Load Grains | Velocity fps | Pressure C.U.P. |
|---|---|---|---|---|---|---|
| **IMR-4064** | 45.0 | 2920 | 40,000 | **50.5** | **3271** | **50,600** |
| Varget | 46.0 | 2922 | 40,000 | 51.0 | 3213 | 50,800 |
| RX15 | 45.0 | 2861 | 38,000 | 52.7 | 3296 | 51,400 |
| AA2700 | 48.0 | 2881 | 43,200 | 53.5 | 3128 | 50,600 |
| H-414 | 49.2 | 2833 | 35,500 | 56.0 | 3266 | 50,400 |
| IMR-4350 | 49.2 | 2873 | 38,700 | 56.0 | 3274 | 49,600 |
| IMR-4831 | 54.0 | 2846 | 37,500 | 61.0+ | 3376 | 51,900 |
| XMR-3100 | 52.0 | 2655 | 36,100 | 61.5+ | 3230 | 51,800 |
| H4831 | 54.0 | 2824 | 38,600 | 61.0+ | 3174 | 49,200 |

**130 gr. Jacketed SBT**
3.250" OAL
**BC:** .436
**SD:** .242

| Powder | Sugg Starting Grains | Velocity fps | Pressure C.U.P. | Max Load Grains | Velocity fps | Pressure C.U.P. |
|---|---|---|---|---|---|---|
| IMR-4064 | 44.5 | 2695 | 39,500 | 49.5 | 3014 | 50,600 |
| Varget | 42.0 | 2723 | 41,500 | 47.0 | 2970 | 52,000 |
| H-380 | 44.0 | 2680 | 41,100 | 50.0 | 2994 | 54,000 |
| H-414 | 48.5 | 2726 | 40,700 | 54.0 | 3033 | 50,500 |
| IMR-4350 | 49.0 | 2654 | 38,200 | 54.5 | 3032 | 51,100 |
| N160 | 50.0 | 2652 | 37,700 | 55.5 | 2999 | 49,800 |
| RX19 | 48.5 | 2486 | 35,000 | 57.0 | 3066 | 51,900 |
| IMR-4831 | 53.0 | 2823 | 40,800 | 57.0+ | 3127 | 52,100 |
| XMR-3100 | 50.0 | 2536 | 36,300 | 59.0+ | 2939 | 51,900 |
| **H4831** | 52.0 | 2726 | 40,200 | **58.0+** | **2990** | **50,900** |
| RX22 | 51.0 | 2564 | 35,600 | 60.0+ | 3173 | 51,800 |
| IMR-7828 | 53.5 | 2600 | 39,200 | 59.5+ | 3042 | 51,700 |
| **SR-4759 | 24.0 | 2210 | 39,000 | 28.5 | 2502 | 50,200 |
| **XMP-5744 | 27.0 | 2223 | 35,100 | 31.0 | 2469 | 39,900 |

**140 gr. Jacketed BTSP**
3.335" OAL
**BC:** .486
**SD:** .261

| Powder | Sugg Starting Grains | Velocity fps | Pressure C.U.P. | Max Load Grains | Velocity fps | Pressure C.U.P. |
|---|---|---|---|---|---|---|
| IMR-4064 | 41.3 | 2612 | 39,000 | 47.0 | 2929 | 52,000 |
| H-414 | 46.2 | 2684 | 44,200 | 52.5 | 2914 | 51,700 |
| **N160** | 50.0 | 2588 | 38,900 | **55.5** | **2929** | **50,900** |
| IMR-4350 | 49.0 | 2604 | 38,800 | 54.0 | 2982 | 51,000 |
| RX19 | 51.3 | 2651 | 40,200 | 57.0 | 3010 | 51,400 |
| IMR-4831 | 52.0 | 2703 | 39,900 | 56.3 | 3010 | 51,500 |
| XMR-3100 | 48.8 | 2453 | 36,000 | 57.5 | 2979 | 51,900 |
| H-4831 | 51.0 | 2603 | 35,000 | 58.0+ | 3004 | 51,000 |
| RX22 | 52.5 | 2587 | 37,100 | 58.5+ | 2980 | 50,400 |
| IMR-7828 | 53.0 | 2544 | 37,300 | 59.0+ | 2958 | 50,400 |

**150 gr. Jacketed SP**
3.285" OAL
**BC:** .462
**SD:** .279

| Powder | Sugg Starting Grains | Velocity fps | Pressure C.U.P. | Max Load Grains | Velocity fps | Pressure C.U.P. |
|---|---|---|---|---|---|---|
| IMR-4064 | 42.5 | 2510 | 41,800 | 47.0 | 2750 | 50,900 |
| H-380 | 40.4 | 2434 | 41,300 | 46.0 | 2655 | 51,500 |
| H-414 | 46.0 | 2547 | 44,200 | 51.0 | 2777 | 50,400 |
| N160 | 48.0 | 2494 | 41,600 | 53.5 | 2766 | 50,900 |
| IMR-4350 | 48.0 | 2524 | 40,400 | 52.0 | 2833 | 51,100 |
| RX19 | 46.9 | 2386 | 36,300 | 55.2 | 2857 | 51,600 |
| IMR-4831 | 50.3 | 2614 | 42,000 | 54.3 | 2860 | 52,000 |
| XMR-3100 | 48.0 | 2354 | 36,300 | 56.6 | 2852 | 51,900 |
| **H-4831** | 50.5 | 2440 | 39,400 | **56.0** | **2788** | **51,200** |
| RX22 | 48.8 | 2466 | 36,300 | 57.5+ | 2852 | 51,000 |
| IMR-7828 | 51.5 | 2465 | 38,300 | 57.0+ | 2810 | 48,800 |
| RX25 | 56.0 | 2569 | 39,400 | 62.0+ | 2907 | 49,600 |

**160 gr. Jacketed SP**
3.340" OAL
**BC:** .434
**SD:** .298

| Powder | Sugg Starting Grains | Velocity fps | Pressure C.U.P. | Max Load Grains | Velocity fps | Pressure C.U.P. |
|---|---|---|---|---|---|---|
| IMR-4350 | 47.0 | 2470 | 40,500 | 51.0 | 2755 | 50,600 |
| IMR-4831 | 48.0 | 2403 | 37,000 | 53.5 | 2741 | 49,000 |
| XMR-3100 | 49.5 | 2344 | 38,100 | 55.0 | 2685 | 50,000 |
| **RX22** | 51.5 | 2447 | 38,300 | **57.0+** | **2798** | **49,900** |
| IMR-7828 | 51.5 | 2412 | 39,900 | 57.0+ | 2781 | 49,800 |
| H1000 | 54.0 | 2407 | 35,700 | 60.0+ | 2776 | 49,300 |
| RX25 | 55.5 | 2478 | 37,800 | 61.5+ | 2853 | 50,800 |

**#280642**
150 gr. (#2 Alloy) 3.073" OAL
**BC:** .260
**SD:** .279

| Powder | Sugg Starting Grains | Velocity fps | Pressure C.U.P. | Max Load Grains | Velocity fps | Pressure C.U.P. |
|---|---|---|---|---|---|---|
| Unique | 12.0 | 1519 | 26,300 | 19.0 | 2025 | 48,200 |
| SR-7625 | 13.0 | 1533 | 29,800 | 18.0 | 1876 | 50,100 |
| SR-4756 | 13.0 | 1500 | 26,100 | 19.0 | 1911 | 47,800 |
| SR-4759 | 16.0 | 1696 | 23,500 | 23.0 | 2153 | 40,400 |
| AA-1680 | 20.5 | 1753 | 22,500 | 28.5 | 2160 | 35,300 |
| XMP-5744 | 18.0 | 1685 | 22,300 | 24.5 | 2059 | 33,900 |
| IMR-4198 | 18.0 | 1675 | 21,600 | 26.0 | 2147 | 34,000 |
| XMR-2015 | 30.0 | 2058 | 27,300 | 34.0 | 2254 | 33,500 |
| **RX7** | 19.0 | 1711 | 20,700 | **27.0** | **2155** | **34,700** |

**Note:** Loads shown in shaded panels are maximum.
Loads shown in bold designate potentially most accurate load.
+ Designates a compressed powder charge.
**Designates a reduced load.

# 270 WSM (Winchester Short Magnum)

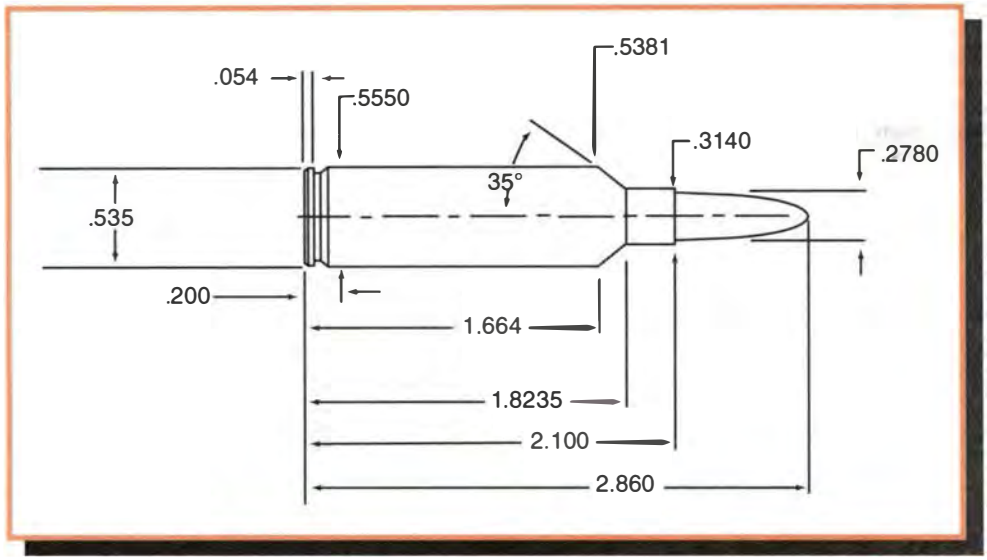


**Comments:**

The late Jack O'Connor spent much of his long career spreading the gospel of the 270 Winchester in the pages of *Outdoor Life* magazine. Along with Weatherby's 270 Magnum developed in 1943, they constituted the only two factory produced chamberings in the .277" bullet size for many years. Aficionados of the .277" diameter bullet now have their own Short Magnum cartridge. U.S. Repeating Arms/Winchester introduced the 270 WSM in 2002 as the first new factory offering in the 270 caliber in nearly 60 years and the first designed for a short action. The 270 WSM is a necked down version of the 300 WSM sharing its 35-degree shoulder and 2.100" length. Ballistic performance of the WSM tops the time-proven 270 Winchester by around 200 feet per second and is about on par to that of the 270 Weatherby Magnum. The overall length of many premium bullets may require that they be seated deeper into the case than they would be in a longer action. Unfortunately, the configuration of Lyman's current 270 caliber cast bullet prevented its use in the WSM. Powders that gave best results in laboratory tests included Alliant's Reloder 19 and Reloder 22, IMR-7828, and VihtaVuori N165.

**Test Components:**

Cases . . . . . .Winchester
Trim-to Length . . . . . .2.090"
Primers . . . . . .Winchester WLRM
Primer Size . . . . . .Large Rifle Magnum
Lyman Shell Holder . . . . . .No. 34
Jacketed Bullets Used . . . . . .Sierra HP #1800, 90 gr.
Sierra SPT #1810, 110 gr.
S eer Grand Slam #1465, 130 gr.
Swift Scirocco, 130 gr.
Hornady BTSP #2735, 140 gr.
Barnes X #27735, 150 gr.
Hornady RN #2745, 150 gr.
Nosler SP #16324, 160 gr.

**Test Specifications:**
**(Velocity & Pressure)**

Firearm Used . . . . . .Universal Receiver
Barrel Length . . . . . .24"
Twist . . . . . .1-10"
Groove Dia. . . . . .277"

**90 gr. Jacketed HP** — 2.700" OAL — **BC:** .195 **SD:** .168

| Powder | Sugg Starting Grains | Velocity fps | Pressure P.S.I. | Max Load Grains | Velocity fps | Pressure P.S.I. |
|---|---|---|---|---|---|---|
| **IMR-4350** | 66.5 | 3544 | 50,900 | **70.0** | **3786** | **61,400** |
| RX19 | 71.0 | 3545 | 51,900 | 75.0+ | 3777 | 60,900 |

**110 gr. Jacketed SPT** — 2.750" OAL — **BC:** .318 **SD:** .205

| Powder | Sugg Starting Grains | Velocity fps | Pressure P.S.I. | Max Load Grains | Velocity fps | Pressure P.S.I. |
|---|---|---|---|---|---|---|
| 760 | 61.5 | 3316 | 56,800 | 65.0 | 3431 | 62,100 |
| IMR-4350 | 62.5 | 3274 | 52,000 | 66.0 | 3467 | 61,200 |
| N160 | 64.0 | 3378 | 59,000 | 67.5 | 3481 | 62,100 |
| **RX19** | 67.5 | 3312 | 52,700 | **71.0+** | **3515** | **62,100** |

**Note:** Loads shown in shaded panels are maximum.
Loads shown in bold designate potentially most accurate load.
+ Designates a compressed powder charge.

# 270 WSM (Winchester Short Magnum)

**130 gr. Jacketed GSSP** — 2.765" OAL — **BC:** .345 **SD:** .241

| Powder | Sugg Starting Grains | Velocity fps | Pressure P.S.I. | Max Load Grains | Velocity fps | Pressure P.S.I. |
|---|---|---|---|---|---|---|
| 760 | 56.5 | 2977 | 53,500 | 59.5 | 3102 | 58,700 |
| H414 | 57.0 | 2979 | 53,300 | 60.0 | 3155 | 61,500 |
| IMR-4350 | 59.5 | 3074 | 54,700 | 63.0 | 3222 | 61,600 |
| IMR-4831 | 63.0 | 3105 | 54,000 | 66.5 | 3280 | 62,400 |
| **H-4831** | 64.0 | 3054 | 55,900 | **67.5** | **3183** | **62,200** |
| RX22 | 64.5 | 3196 | 58,000 | 68.0 | 3302 | 61,600 |
| WXR | 64.5 | 3033 | 50,800 | 68.0 | 3234 | 60,000 |
| MagPro | 69.5 | 3133 | 53,000 | 73.5 | 3290 | 60,500 |

**130 gr. Jacketed Scirocco** — 2.860" OAL — **BC:** .450 **SD:** .242

| Powder | Sugg Starting Grains | Velocity fps | Pressure P.S.I. | Max Load Grains | Velocity fps | Pressure P.S.I. |
|---|---|---|---|---|---|---|
| H414 | 56.0 | 2990 | 53,400 | 59.0 | 3138 | 60,400 |
| IMR-4350 | 59.0 | 3046 | 53,600 | 62.0 | 3199 | 61,200 |
| N160 | 60.0 | 3053 | 54,600 | 63.5 | 3203 | 62,000 |
| H-4831 | 63.0 | 3011 | 54,400 | 66.5 | 3158 | 61,900 |
| **RX19** | 63.5 | 3074 | 52,900 | **67.0** | **3257** | **62,000** |
| WXR | 65.5 | 3100 | 53,700 | 69.0+ | 3284 | 62,400 |
| MagPro | 68.5 | 3092 | 51,400 | 72.0 | 3252 | 60,100 |

**140 gr. Jacketed BTSP** — 2.785" OAL — **BC:** .486 **SD:** .261

| Powder | Sugg Starting Grains | Velocity fps | Pressure P.S.I. | Max Load Grains | Velocity fps | Pressure P.S.I. |
|---|---|---|---|---|---|---|
| H414 | 54.5 | 2880 | 53,000 | 57.5 | 3042 | 62,000 |
| IMR-4350 | 58.5 | 2992 | 54,400 | 61.5 | 3141 | 62,400 |
| IMR-4831 | 58.0 | 2954 | 52,900 | 61.0 | 3104 | 60,800 |
| XMR-3100 | 61.5 | 2953 | 52,800 | 65.0 | 3137 | 62,700 |
| RX22 | 60.0 | 3021 | 55,100 | 63.0 | 3160 | 62,100 |
| WXR | 61.0 | 3009 | 55,200 | 64.5 | 3138 | 61,500 |
| IMR-7828 | 60.5 | 2966 | 53,000 | 64.0 | 3114 | 60,600 |
| N165 | 61.5 | 2998 | 56,300 | 65.0 | 3111 | 61,800 |
| RX25 | 64.0 | 2960 | 51,600 | 67.5+ | 3138 | 60,400 |
| MagPro | 65.5 | 2925 | 48,300 | 69.0 | 3154 | 60,400 |
| **Retumbo** | 68.0 | 2984 | 52,300 | **71.5** | **3133** | **60,700** |

**150 gr. Barnes X** — 2.775" OAL — **BC:** .491 **SD:** .279

| Powder | Sugg Starting Grains | Velocity fps | Pressure P.S.I. | Max Load Grains | Velocity fps | Pressure P.S.I. |
|---|---|---|---|---|---|---|
| RX22 | 55.5 | 2758 | 53,500 | 58.5 | 2893 | 59,900 |
| WXR | 60.5 | 2851 | 55,800 | 64.0 | 2994 | 62,400 |
| **IMR-7828** | 60.5 | 2842 | 56,200 | **64.0** | **2982** | **62,500** |
| RX25 | 63.5 | 2856 | 55,600 | 67.0 | 3004 | 62,200 |
| MagPro | 64.5 | 2837 | 54,000 | 68.0 | 2996 | 62,000 |

**150 gr. Jacketed RN** — 2.775" OAL — **BC:** .269 **SD:** .279

| Powder | Sugg Starting Grains | Velocity fps | Pressure P.S.I. | Max Load Grains | Velocity fps | Pressure P.S.I. |
|---|---|---|---|---|---|---|
| H414 | 55.0 | 2846 | 56,700 | 58.0 | 2963 | 62,400 |
| IMR-4831 | 58.0 | 2887 | 54,900 | 61.0 | 3020 | 62,300 |
| RX22 | 59.5 | 2944 | 56,500 | 63.0 | 3058 | 62,600 |
| WXR | 60.5 | 2887 | 53,700 | 63.7 | 3034 | 61,600 |
| **N165** | 61.5 | 2894 | 56,100 | **65.0** | **3010** | **62,300** |
| IMR-7828 | 61.5 | 2900 | 53,600 | 65.0 | 3048 | 62,000 |
| RX25 | 65.0 | 2961 | 55,700 | 68.0 | 3088 | 62,300 |
| MagPro | 64.5 | 2896 | 53,200 | 68.0 | 3049 | 62,000 |
| H1000 | 67.0 | 2868 | 53,800 | 70.5+ | 3004 | 61,100 |

**160 gr. Jacketed SP** — 2.830" OAL — **BC:** .434 **SD:** .298

| Powder | Sugg Starting Grains | Velocity fps | Pressure P.S.I. | Max Load Grains | Velocity fps | Pressure P.S.I. |
|---|---|---|---|---|---|---|
| **RX22** | 55.0 | 2809 | 57,600 | **58.0** | **2905** | **61,900** |
| IMR-7828 | 58.0 | 2798 | 54,800 | 61.0 | 2929 | 61,700 |
| RX25 | 61.0 | 2821 | 54,000 | 64.5 | 2953 | 60,700 |
| N170 | 62.5 | 2806 | 56,200 | 66.0 | 2917 | 61,900 |
| H1000 | 62.5 | 2769 | 55,100 | 66.0 | 2913 | 62,900 |
| MagPro | 63.0 | 2832 | 55,500 | 66.5 | 2952 | 61,200 |
| Retumbo | 64.5 | 2852 | 56,100 | 68.0 | 2978 | 62,700 |

**Note:** Loads shown in shaded panels are maximum.
Loads shown in bold designate potentially most accurate load.
\+ Designates a compressed powder charge.

# 270 Weatherby Magnum

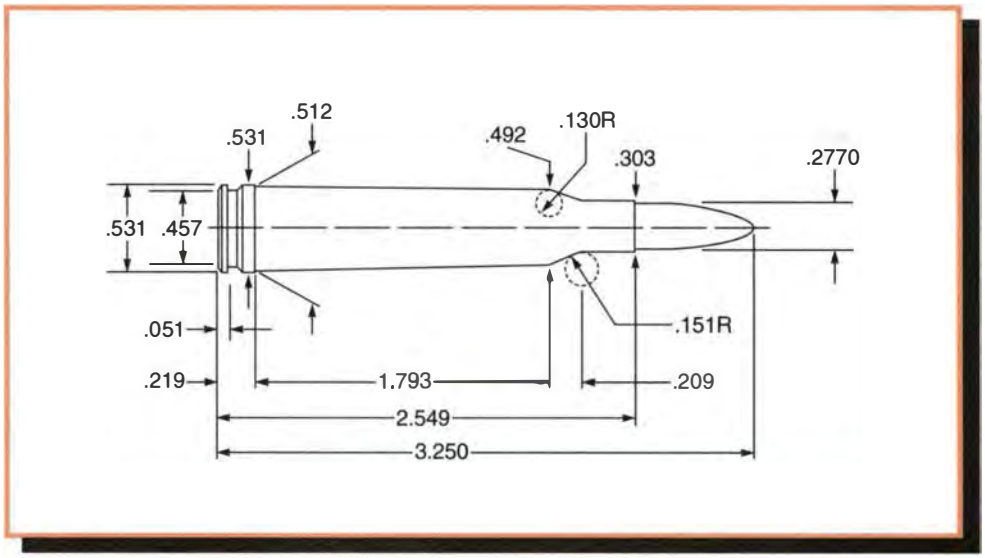


**Comments:**

Roy Weatherby developed his 270 Magnum as the first in his long and distinguished line of high velocity rifle cartridges in 1943. Based on a blown out 300 Holland and Holland case, its instantly recognizable double radius shoulder became the trademark of all future Weatherby designs. This was for many years the last word in high performance in the .277 bore size giving on average, some 200 feet per second over the 270 Winchester. Winchester's recent introduction of their 270 WSM however has given the Weatherby some competition. This cartridge works best with slower powders. IMR-7828 and H-1000 gave good results in our tests although H-4831 is a longtime favorite. Weatherby recommends exclusive use of the Federal 215 Magnum primers for use with all jacketed bullets. Shooters loading cast bullets should use standard primers. This data is intended for commercially produced and chambered rifles. This data is not for use in custom guns that may lack the free bore found in standard Weatherby chambers.

**Test Components:**

Cases . . . . . .Federal
Trim-to Length . . . . . .2.540"
Primers . . . . . .Federal 215 Magnum(Jacketed bullets)
Federal 210 (Cast bullets)
Primer Size . . . . . .Large Rifle
Lyman Shell Holder . . . . . .No. 13
Jacketed Bullets Used . . .Speer Grand Slam #1465, 130 gr.
Hornady BTSP #2735, 140 gr.
Barnes X #27735, 150 gr.
Nosler Partition #16324, 160 gr.
Cast Bullets Used . . . . . .(sized to .277" dia)
*gas check bullet *#280642, 150 gr.

**Test Specifications:**
**(Velocity Only)**

Firearm Used . . . . . .Weatherby Mk V
Barrel Length . . . . . .26"
Twist . . . . . .1-10"
Groove Dia. . . . . ..277"

**130 gr. Jacketed GSSP** — 3.210" OAL — **BC:** .345 **SD:** .242

| Powder | Sugg Starting Grains | Velocity fps | Pressure | Max Load Grains | Velocity fps | Pressure |
|---|---|---|---|---|---|---|
| IMR-4831 | 65.5 | 3078 | — | 69.0 | 3288 | — |
| XMR-3100 | 66.5 | 3059 | — | 70.0 | 3302 | — |
| H-4831 | 68.5 | 3136 | — | 72.0 | 3276 | — |
| RX22 | 66.5 | 3145 | — | 70.0 | 3297 | — |
| IMR-7828 | 67.5 | 3070 | — | 71.0 | 3321 | — |
| **H1000** | 72.0 | 3047 | — | **76.0** | **3300** | **—** |

**140 gr. Jacketed BTSP** — 3.240" OAL — **BC:** .486 **SD:** .261

| Powder | Sugg Starting Grains | Velocity fps | Pressure | Max Load Grains | Velocity fps | Pressure |
|---|---|---|---|---|---|---|
| IMR-4831 | 62.5 | 2897 | — | 66.0 | 3117 | — |
| XMR-3100 | 63.5 | 2945 | — | 67.0 | 3141 | — |
| H-4831 | 65.5 | 2951 | — | 69.0 | 3134 | — |
| RX22 | 64.5 | 2960 | — | 68.0 | 3148 | — |
| IMR-7828 | 65.5 | 2959 | — | 69.0 | 3145 | — |
| **H1000** | 69.0 | 2896 | — | **73.0** | **3119** | **—** |

**Note:** Loads shown in shaded panels are maximum.
Loads shown in bold designate potentially most accurate load.

# 270 Weatherby Magnum

**150 gr. Barnes X**
3.250" OAL
**BC:** .491
**SD:** .279

| Powder | Sugg Starting Grains | Velocity fps | Pressure | Max Load Grains | Velocity fps | Pressure |
|---|---|---|---|---|---|---|
| IMR-4831 | 62.5 | 2870 | — | 66.0 | 3055 | — |
| **XMR-3100** | 64.5 | 2928 | — | **68.0** | **3108** | — |
| H-4831 | 64.5 | 2867 | — | 68.0 | 3064 | — |
| RX22 | 63.5 | 2944 | — | 67.0 | 3097 | — |
| IMR-7828 | 63.5 | 2830 | — | 67.0 | 3046 | — |
| H1000 | 70.0 | 2915 | — | 74.0+ | 3113 | — |

**160 gr. Jacketed SP**
3.250" OAL
**BC:** .434
**SD:** .298

| Powder | Sugg Starting Grains | Velocity fps | Pressure | Max Load Grains | Velocity fps | Pressure |
|---|---|---|---|---|---|---|
| IMR-4831 | 61.5 | 2767 | — | 65.0 | 2969 | — |
| XMR-3100 | 61.5 | 2752 | — | 65.0 | 2943 | — |
| H-4831 | 63.5 | 2809 | — | 67.0 | 2966 | — |
| RX22 | 62.5 | 2867 | — | 66.0 | 3002 | — |
| **IMR-7828** | 63.5 | 2846 | — | **67.0** | **2995** | — |
| H1000 | 67.5 | 2767 | — | 71.0 | 2968 | — |

**#280642****
150 gr. (#2 Alloy) 3.200" OAL
**BC:** .260
**SD:** .279

| Powder | Sugg Starting Grains | Velocity fps | Pressure | Max Load Grains | Velocity fps | Pressure |
|---|---|---|---|---|---|---|
| SR-4759 | 20.0 | 1725 | — | 28.0 | 2136 | — |
| IMR-4227 | 22.0 | 1723 | — | 30.0 | 2112 | — |
| XMP-5744 | 22.5 | 1707 | — | 30.0 | 2105 | — |
| **IMR-4198** | **22.0** | **1696** | — | 30.5 | 2103 | — |
| RX7 | 23.0 | 1695 | — | 31.0 | 2109 | — |

**Note:** Loads shown in shaded panels are maximum.
Loads shown in bold designate potentially most accurate load.
** Designates use of Federal 210 primers.
+Designates a compressed powder charge.

# 7-30 Waters

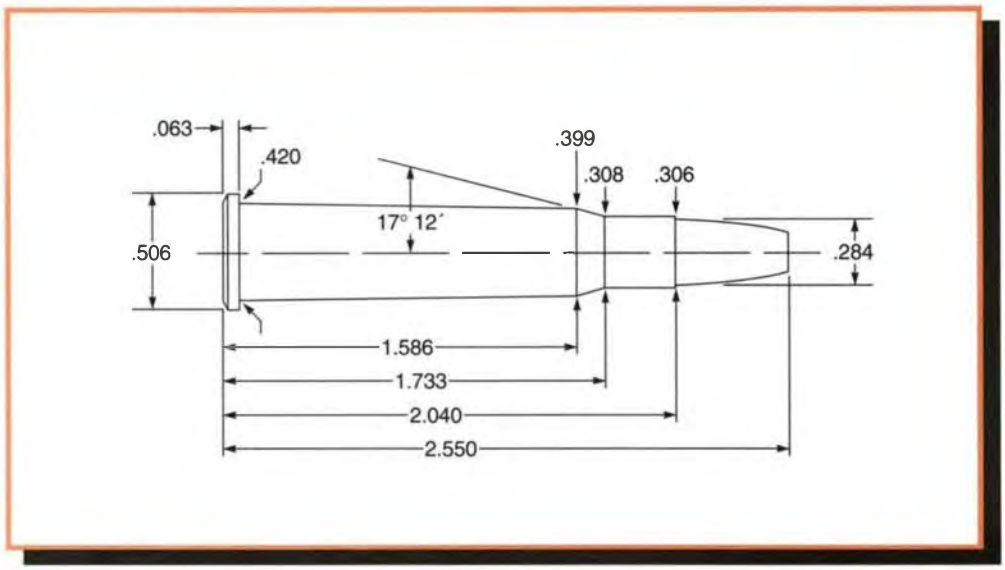


**Comments:**

Attempts to improve the ballistics of the 30-30 over the years resulted in various "Improved" or wildcat chamberings. Gunwriter Ken Waters developed this car ridge during the 1970s to give shooters of lever-action, tubular magazine rifles a flatter shooting, higher velocity cartridge han what was generally available. The 7-30 is basically a necked down and blown out 30-30 Winchester fea uring a shorter neck and approximately five percent more powder capacity. U.S. Repeating Arms commenced production of Model 94 rifles chambered for the Waters in 1983. As the only tubular magazine rifle built for .284" diameter bullets, bullet selection is limited. Lyman offers data to duplicate both he 120-grain factory load as well as the 139-grain load originally envisioned by Mr. Waters. Shooters can expect an 80 to 100 foot per second increase over the listed data if they're using a 24-inch barrel. In addition to our listed accuracy loads, IMR-3031 and 748 will often give good results with jacketed bullets. *Caution: Shooters should not use any pointed bullets in rifles built with tubular magazines*

**Test Components:**

Cases . . . . . .Federal
Trim-to Length . . . . . .2.030"
Primers . . . . . .CCI 200
Primer Size . . . . . .Large Rifle
Lyman Shell Holder . . . . . .No. 6
Jacketed Bullets Used . . . .Nosler FP #28121, 120 gr.
Hornady FP #2822, 139 gr.
Cast Bullets Used . . . . . .(sized to .285" dia)
*gas check bullet *#287346, 135 gr.

**Test Specifications:**
**(Velocity & Pressure)**

Firearm Used . . . . . .Universal Receiver
Barrel Length . . . . . .20"
Twist . . . . . .1-9.9"
Groove Dia. . . . . ..284"

**120 gr. Jacketed FP**
2.530" OAL
**BC:** .195
**SD:** .213

| Powder | Sugg Starting Grains | Velocity fps | Pressure C.U.P. | Max Load Grains | Velocity fps | Pressure C.U.P. |
|---|---|---|---|---|---|---|
| IMR-3031 | 29.0 | 2056 | 24,200 | 32.5 | 2398 | 35,500 |
| **IMR-4895** | 31.0 | 2155 | 28,400 | **34.5** | **2443** | **38,000** |
| H-335 | 31.3 | 2144 | 24,200 | 34.8 | 2453 | 36,700 |
| BL-C (2) | 33.8 | 2214 | 26,500 | 37.5 | 2520 | 35,400 |
| AA2460 | 30.0 | 2142 | 28,000 | 33.6 | 2441 | 39,200 |
| 748 | 34.0 | 2183 | 25,200 | 38.0 | 2486 | 33,000 |
| AA-2520 | 31.5 | 2310 | 30,000 | 35.0 | 2554 | 39,000 |
| RX15 | 32.5 | 2247 | 29,400 | 36.0 | 2497 | 36,900 |

**139 gr. Jacketed FP**
2.545" OAL
**BC:** .196
**SD:** .246

| Powder | Sugg Starting Grains | Velocity fps | Pressure C.U.P. | Max Load Grains | Velocity fps | Pressure C.U.P. |
|---|---|---|---|---|---|---|
| IMR-3031 | 28.2 | 1986 | 24,300 | 31.9 | 2334 | 37,700 |
| IMR-4895 | 29.3 | 2005 | 25,000 | 34.0+ | 2370 | 39,700 |
| H-335 | 29.5 | 2093 | 28,900 | 33.7 | 2352 | 38,600 |
| BL-C (2) | 31.4 | 2019 | 26,000 | 35.7 | 2327 | 38,000 |
| AA-2460 | 29.0 | 1965 | 25,300 | 32.8 | 2277 | 37,400 |
| 748 | 32.0 | 2132 | 27,500 | 36.0 | 2415 | 39,600 |
| AA-2520 | 30.5 | 2129 | 27,600 | 34.0 | 2412 | 39,400 |
| **RX15** | 30.5 | 2074 | 28,500 | **34.0** | **2321** | **36,900** |

**Note:** Loads shown in shaded panels are maximum.
Loads shown in bold designate potentially most accurate load.
\+ Designates a compressed powder charge.

**#287346**
135 gr. (#2 Alloy) 2.475" OAL

**BC:** .235
**SD:** .239

| Powder | Sugg Starting Grains | Velocity fps | Pressure C.U.P. | Max Load Grains | Velocity fps | Pressure C.U.P. |
|---|---|---|---|---|---|---|
| SR-4759 | 16.5 | 1746 | 18,900 | 20.0 | 2017 | 34,600 |
| **XMP-5744** | 20.3 | 1884 | 27,000 | **22.5** | **2053** | **32,300** |
| RX7 | 23.0 | 1859 | 19,200 | 26.9 | 2145 | 31,000 |
| IMR-3031 | 25.5 | 1816 | 16,800 | 31.0+ | 2277 | 34,900 |
| 748 | 29.5 | 1975 | 20,000 | 33.5+ | 2264 | 32,800 |
| AA-2460 | 26.0 | 1882 | 19,500 | 32.0 | 2273 | 34,600 |
| H-335 | 26.2 | 1904 | 18,500 | 32.0 | 2300 | 34,500 |

**Note:** Loads shown in shaded panels are maximum.
Loads shown in bold designate potentially most accurate load.
+ Designates a compress d powder charge.

# 7mm-08 Remington

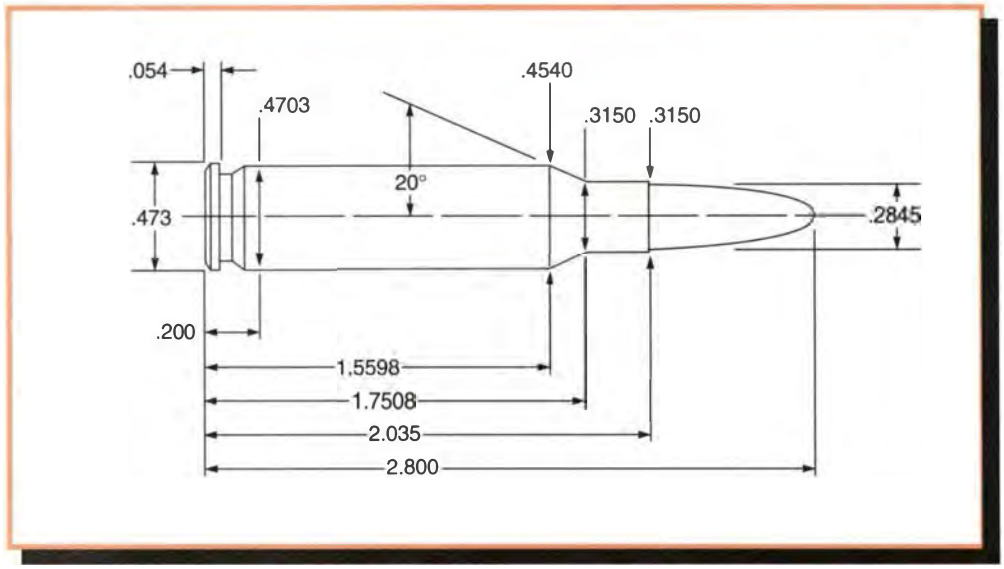


**Comments:**

This cartridge was designed to fill a need for silhouette shooting. It is a necked down version of the 308 and has the advantage of less recoil as compared to its parent round. The 7mm-08 ranks right near the top among deer hunting cartridges. It has a flat trajectory and great accuracy. It is somewhat handicapped with the heavier bullets due to the short magazines used in rifles chambered for this round.

The factory ammo we have looked at was loaded with a Ball Powder that was just a tad faster burning than Winchester 760. Thus, 760 is as close as possible to duplicating factory specs. Nonetheless best accuracy often occurs with all weight bullets when using Hodgdon H380. Second choice would be IMR 4350 but this will mean the inconvenience of compressed powder loads.

**Test Components:**

Cases . . . . . .Remington
Trim-to Length . . . . . .2.025"
Primers . . . . . .Remington 9½
Primer Size . . . . . .Large Rifle
Lyman Shell Holder . . . . . .No. 2
Jacketed Bullets Used . . . . .Sierra SPT #1900, 120 gr.
Hornady SP #2820, 139 gr.
Hornady SP #2830, 154 gr.
Hornady BTSP #2845, 162 gr.
Sierra HPBT #1930, 168 gr.
Speer Grand Slam #1643, 175 gr.
Cast Bullets Used . . . . . .(sized to .284" dia)
*gas check bullet *#287346, 135 gr.
*#287641, 160 gr.

**Test Specifications: (Velocity & Pressure)**

Firearm Used . . . . . .Universal Receiver
Barrel Length . . . . . .24"
Twist . . . . . .1-9½"
Groove Dia. . . . . ..284"

**120 gr. Jacketed SPT** — 2.790" OAL — BC: .328 SD: .213

| Powder | Sugg Starting Grains | Velocity fps | Pressure C.U.P. | Max Load Grains | Velocity fps | Pressure C.U.P. |
|---|---|---|---|---|---|---|
| RX7 | 33.1 | 2655 | 38,300 | 36.0 | 2811 | 50,000 |
| IMR-3031 | 37.4 | 2706 | 34,800 | 42.6 | 3012 | 47,000 |
| 748 | 41.0 | 2704 | 35,700 | 46.0 | 3037 | 49,900 |
| IMR-4064 | 39.0 | 2657 | 37,000 | 44.5+ | 3023 | 48,100 |
| IMR-4895 | 37.8 | 2705 | 38,700 | 43.0 | 2999 | 48,100 |
| H-380 | 43.5 | 2765 | 36,500 | 49.5+ | 3100 | 50,000 |
| H-414 | 44.0 | 2680 | 36,500 | 50.0+ | 3007 | 48,400 |

**139 gr. Jacketed SP** — 2.750" OAL — BC: .392 SD: .246

| Powder | Sugg Starting Grains | Velocity fps | Pressure C.U.P. | Max Load Grains | Velocity fps | Pressure C.U.P. |
|---|---|---|---|---|---|---|
| IMR-3031 | 37.5 | 2564 | 39,000 | 40.0 | 2765 | 47,200 |
| AA2460 | 37.0 | 2433 | 36,700 | 41.4 | 2766 | 50,900 |
| 748 | 41.5 | 2591 | 38,200 | 44.5 | 2929 | 51,200 |
| **IMR-4895** | **38.7** | **2534** | **36,100** | 43.0 | 2812 | 50,800 |
| IMR-4064 | 38.0 | 2456 | 34,000 | 43.2 | 2854 | 50,200 |
| IMR-4320 | 37.5 | 2381 | 33,500 | 42.6 | 2727 | 49,300 |
| RX15 | 37.3 | 2467 | 35,400 | 43.0 | 2824 | 50,200 |
| H-380 | 41.7 | 2513 | 36,200 | 47.0 | 2815 | 50,500 |
| 760 | 43.0 | 2500 | 34,900 | 48.0 | 2818 | 48,500 |
| H-414 | 42.3 | 2516 | 33,500 | 47.6 | 2840 | 46,100 |
| IMR-4350 | 45.0 | 2600 | 39,400 | 48.0+ | 2858 | 50,500 |
| RX19 | 46.0 | 2512 | 37,500 | 52.0+ | 2857 | 49,300 |
| **SR-4759 | 20.0 | 1879 | 33,700 | 26.0 | 2304 | 50,300 |
| **XMP-5744 | 23.0 | 1904 | 30,700 | 28.5 | 2306 | 39,700 |

**Note:** Loads shown in shaded panels are maximum.
Loads shown in bold designate potentially most accurate load.
+ Designates a compressed powder charge.
**Designates a reduced load.

# 7mm-08 Remington

**154 gr. Jacketed SP** — 2.800" OAL — **BC:** .433 **SD:** .273

| Powder | Sugg Starting Grains | Velocity fps | Pressure C.U.P. | Max Load Grains | Velocity fps | Pressure C.U.P. |
|---|---|---|---|---|---|---|
| IMR-3031 | 34.3 | 2335 | 34,000 | 39.0 | 2632 | 47,200 |
| AA-2460 | 35.3 | 2262 | 38,500 | 40.5 | 2598 | 51,100 |
| IMR-4895 | 37.0 | 2371 | 37,200 | 40.0 | 2644 | 49,500 |
| **IMR-4064** | **36.7** | **2388** | **36,300** | 41.8+ | 2702 | 51,600 |
| IMR-4320 | 36.5 | 2315 | 37,000 | 41.6+ | 2641 | 50,100 |
| RX15 | 38.7 | 2478 | 40,800 | 42.0 | 2736 | 51,000 |
| H-380 | 38.5 | 2388 | 38,300 | 43.8 | 2668 | 51,000 |
| 760 | 40.5 | 2315 | 33,300 | 46.0 | 2702 | 50,800 |
| H-414 | 40.5 | 2357 | 34,800 | 46.0 | 2731 | 51,700 |
| IMR-4350 | 39.5 | 2324 | 35,000 | 45.0+ | 2622 | 46,900 |
| RX19 | 44.0 | 2394 | 37,800 | 49.5+ | 2676 | 47,400 |
| **SR-4759 | 22.0 | 1910 | 40,900 | 25.5 | 2121 | 50,900 |
| **XMP-5744 | 24.0 | 1911 | 33,000 | 27.5 | 2142 | 38,600 |

**162 gr. Jacketed BTSP** — 2.800" OAL — **BC:** .514 **SD:** .287

| Powder | Sugg Starting Grains | Velocity fps | Pressure C.U.P. | Max Load Grains | Velocity fps | Pressure C.U.P. |
|---|---|---|---|---|---|---|
| IMR-3031 | 34.3 | 2339 | 35,700 | 39.0 | 2631 | 51,300 |
| AA2460 | 33.3 | 2181 | 37,000 | 39.0 | 2533 | 50,700 |
| **IMR-4895** | 36.5 | 2350 | 37,500 | **39.5** | **2604** | **50,000** |
| IMR-4064 | 35.5 | 2317 | 35,000 | 40.5 | 2626 | 49,700 |
| IMR-4320 | 36.0 | 2301 | 36,200 | 40.9 | 2589 | 51,200 |
| RX15 | 38.5 | 2421 | 39,100 | 41.5 | 2690 | 51,000 |
| H-380 | 38.7 | 2325 | 35,800 | 44.0+ | 2627 | 50,900 |
| 760 | 41.8 | 2395 | 37,200 | 45.5+ | 2663 | 49,400 |
| H-414 | 40.0 | 2312 | 34,500 | 45.4 | 2677 | 51,300 |
| IMR-4350 | 39.5 | 2343 | 36,000 | 45.0+ | 2622 | 47,300 |
| RX19 | 42.0 | 2264 | 34,800 | 49.0+ | 2702 | 50,200 |

**168 gr. Jacketed HPBT** — 2.800" OAL — **BC:** .494 **SD:** .298

| Powder | Sugg Starting Grains | Velocity fps | Pressure C.U.P. | Max Load Grains | Velocity fps | Pressure C.U.P. |
|---|---|---|---|---|---|---|
| IMR-3031 | 33.5 | 2290 | 36,500 | 38.2 | 2575 | 51,500 |
| AA2460 | 35.0 | 2347 | 41,200 | 38.0 | 2607 | 51,900 |
| IMR-4895 | 34.2 | 2306 | 39,200 | 38.9 | 2555 | 51,300 |
| IMR-4064 | 35.6 | 2339 | 39,600 | 40.5+ | 2605 | 51,800 |
| IMR-4320 | 34.7 | 2251 | 37,300 | 39.5 | 2510 | 49,100 |
| **RX15** | 37.3 | 2361 | 38,100 | **40.5** | **2628** | **51,700** |
| H-380 | 38.2 | 2256 | 37,000 | 43.5+ | 2555 | 51,600 |
| 760 | 39.5 | 2280 | 36,200 | 43.5 | 2632 | 51,800 |
| H-414 | 39.0 | 2287 | 36,800 | 44.5 | 2628 | 51,900 |
| IMR-4350 | 39.5 | 2357 | 38,300 | 45.0+ | 2605 | 50,700 |
| RX19 | 43.0 | 2467 | 42,500 | 48.0+ | 2718 | 52,000 |

**175 gr. Jacketed GSSP** — 2.735" OAL — **BC:** .465 **SD:** .310

| Powder | Sugg Starting Grains | Velocity fps | Pressure C.U.P. | Max Load Grains | Velocity fps | Pressure C.U.P. |
|---|---|---|---|---|---|---|
| IMR-3031 | 32.3 | 2112 | 37,200 | 36.8 | 2408 | 50,400 |
| AA2460 | 31.0 | 1997 | 39,800 | 37.3 | 2323 | 51,300 |
| IMR-4895 | 34.3 | 2207 | 40,300 | 39.0 | 2473 | 50,600 |
| IMR-4064 | 35.5 | 2260 | 41,900 | 39.2 | 2487 | 51,400 |
| IMR-4320 | 34.3 | 2171 | 40,200 | 39.0 | 2425 | 51,400 |
| **RX15** | **36.2** | **2275** | **40,900** | 40.0 | 2476 | 50,900 |
| H-380 | 35.8 | 2103 | 38,000 | 40.7 | 2361 | 50,200 |
| 760 | 38.5 | 2208 | 37,500 | 43.8 | 2485 | 48,500 |
| H-414 | 39.0 | 2301 | 38,000 | 43.8 | 2589 | 52,000 |
| IMR-4350 | 38.7 | 2251 | 39,000 | 44.0+ | 2529 | 51,300 |
| RX19 | 40.3 | 2191 | 38,700 | 47.0+ | 2539 | 51,400 |

**#287346** — 135 gr. (#2 Alloy) 2.600" OAL — **BC:** .235 **SD:** .239

| Powder | Sugg Starting Grains | Velocity fps | Pressure C.U.P. | Max Load Grains | Velocity fps | Pressure C.U.P. |
|---|---|---|---|---|---|---|
| SR-4759 | 15.3 | 1529 | 13,300 | 23.5 | 2189 | 36,900 |
| IMR-4227 | 15.8 | 1584 | 14,600 | 24.0 | 2183 | 34,400 |
| IMR-4198 | 16.8 | 1546 | 11,500 | 25.5 | 2161 | 32,300 |
| **XMP-5744** | **16.5** | **1558** | **12,600** | 25.0 | 2128 | 32,200 |
| RX7 | 17.4 | 1559 | 12,200 | 26.5 | 2164 | 31,600 |
| IMR-3031 | 19.8 | 1495 | 10,900 | 30.0 | 2171 | 27,300 |
| 748 | 21.1 | 1509 | 9,600 | 32.0 | 2179 | 28,000 |

**#287641** — 160 gr. (#2 Alloy) 2.705" OAL — **BC:** .382 **SD:** .283

| Powder | Sugg Starting Grains | Velocity fps | Pressure C.U.P. | Max Load Grains | Velocity fps | Pressure C.U.P. |
|---|---|---|---|---|---|---|
| Unique | 12.0 | 1497 | 24,000 | 15.5 | 1769 | 42,100 |
| SR-4759 | 20.7 | 1761 | 21,500 | 26.0 | 2154 | 45,100 |
| IMR-4227 | 21.0 | 1748 | 20,800 | 27.0 | 2105 | 38,500 |
| IMR-4198 | 23.0 | 1805 | 19,500 | 29.5 | 2181 | 36,100 |
| **XMP-5744** | **18.0** | **1601** | **25,000** | 26.0 | 2108 | 36,400 |
| RX7 | 22.0 | 1716 | 18,200 | 28.0 | 2080 | 33,300 |
| IMR-3031 | 28.7 | 1906 | 18,800 | 33.0 | 2238 | 32,000 |
| XMR-2015 | 30.2 | 2060 | 26,900 | 34.0 | 2322 | 41,000 |
| H-335 | 31.5 | 1999 | 23,800 | 36.0 | 2266 | 34,400 |
| IMR-4895 | 29.5 | 1871 | 19,200 | 35.3 | 2296 | 36,000 |
| 748 | 34.5 | 1949 | 20,000 | 39.0 | 2299 | 33,500 |

**Note:** Loads shown in shaded panels are maximum.
Loads shown in bold designate potentially most accurate load.
+ Designates a compressed powder charge.
**Designates a reduced load.

# 7mm Mauser (7 x 57mm)

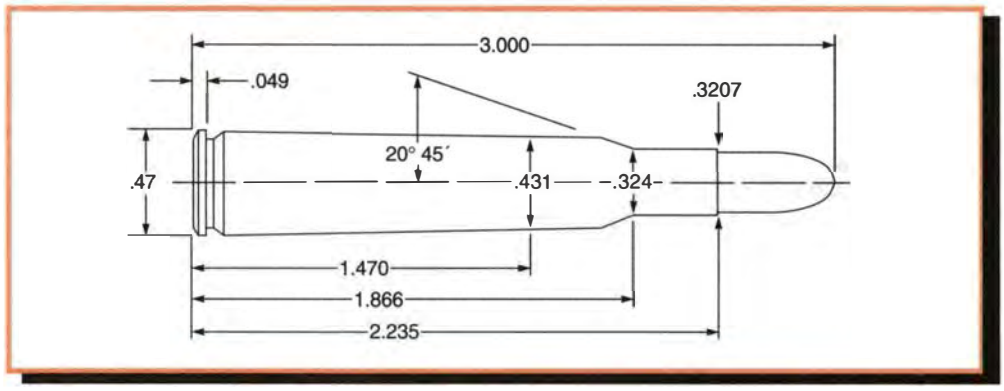


**Comments:**

The 7x57mm Mauser enjoys a longevity that few rifle cartridges can match. The 7mm Mauser made its name on both the battlefields and hunting grounds around the world. Even though it is one of the earliest smokeless cartridges, it's outlasted most all of its contemporaries and is still popular after 110 years. This cartridge first earned its reputation in the hands of Spanish forces in Cuba during the Spanish-American War in 1898. Its range, flat trajectory, and rapid rate of fire from the clip-fed Mauser Model 93 rifle was an unpleasant surprise for American troops armed with the archaic Trapdoor Springfield chambered in 45-70. This harrowing experience helped lead to adaptation of the M1903 Springfield and the 30-06 cartridge several years later.

Military sales of rifles chambered in the 7x57 were wide spread, particularly in Central and South America. As a result, it has been one of the most popular—and useful—of the military cartridges on the surplus market. The original military load consisted of a 173-grain bullet with a muzzle velocity of approximately 2,300 feet per second. Several other military loads featuring lighter bullets at higher velocities also appeared. The 7x57 loaded with 175-grain bullets became legendary as a hunting cartridge and eventually served as the parent case for the 257 Roberts. Rifles chambered for this cartridge often have a relatively fast twist, usually around 1 in 8 1/2." In light of this, shooters may not always get the best results with lighter weight bullets. IMR-4350 has long been a favorite for loading the 7x57. SAAMI established the Maximum Average Pressure (MAP) of 46,000 CUP due to the large numbers of rifles in circulation built upon the older M93 and M95 style actions. Most American manufacturers have produced rifles chambered in 7x57 in recent years while loaded ammo and bulk brass is in ample supply. As with most any foreign military surplus, a variation in groove diameters can be expected. Shooters should slug their bore and size cast bullets accordingly. Cast bullet # 287641 has produced excellent results in our testing.

**Test Components:**

Cases . . . . . .Winchester
Trim-to Length . . . . . .2.225"
Primers . . . . . .Winchester WLR
Primer Size . . . . . .Large Rifle
Lyman Shell Holder . . . . . .No. 2
Jacketed Bullets Used . . . . .Sierra SPT #1900, 120 gr.
Hornady SP #2820, 139 gr.
Sierra, HPBT #1915, 150 gr.
Hornady BTSP #2845, 162 gr.
Sierra HPBT #1930, 168 gr.
Speer Grand Slam #1643, 175 gr.
Cast Bullets Used . . . . . .(sized to .284" dia)
*gas check bullet *#287641, 160 gr.

**Test Specifications:**
**(Velocity & Pressure)**

Firearm Used . . . . . .Mauser 95
Universal Receiver
Barrel Length . . . . . .Mauser 29"
Universal Receiver 24"
Twist . . . . . .Mauser 1-10"
Universal Receiver 1-8¾"
Groove Dia. . . . . .Mauser .2865"
Universal Receiver .284"

**120 gr. Jacketed SPT** — **BC:** .328 **SD:** .213
2.945" OAL

| Powder | Sugg Starting Grains | Velocity fps | Pressure C.U.P. | Max Load Grains | Velocity fps | Pressure C.U.P. |
|---|---|---|---|---|---|---|
| IMR-3031 | 39.0 | 2717 | — | 43.0 | 2958 | — |
| H-335 | 37.3 | 2693 | 39,100 | 41.6 | 2901 | 45,700 |
| BL-C(2) | 41.0 | 2688 | — | 45.0 | 2958 | — |
| IMR-4895 | 41.0 | 2824 | — | 45.0 | 3067 | — |
| IMR-4064 | 41.0 | 2770 | — | 45.0 | 3048 | — |
| Varget | 39.5 | 2661 | 32,630 | 44.0 | 2958 | 44,700 |
| IMR-4320 | 42.0 | 2816 | — | 47.0 | 3067 | — |
| H-380 | 43.0 | 2652 | — | 48.0 | 2949 | — |
| 760 | 46.7 | 2669 | 34,700 | 52.0 | 3001 | 44,500 |
| IMR-4350 | 45.0 | 2652 | — | 50.0+ | 2932 | — |
| H-4831 | 50.0 | 2666 | — | 53.5+ | 2865 | — |

**Note:** Loads shown in shaded panels are maximum.
Loads shown in bold designate potentially most accurate load.
+ Designates a compressed powder charge.

# 7mm Mauser (7 x 57mm)

**139 gr. Jacketed SP** — 2.970" OAL — **BC:** .392 **SD:** .246

| Powder | Sugg Starting Grains | Velocity fps | Pressure C.U.P. | Max Load Grains | Velocity fps | Pressure C.U.P. |
|---|---|---|---|---|---|---|
| H-335 | 36.0 | 2457 | 37,200 | 40.5 | 2687 | 45,300 |
| BL-C(2) | 39.0 | 2427 | — | 43.0 | 2695 | — |
| IMR-4895 | 34.5 | 2420 | 32,800 | 38.0 | 2724 | 44,800 |
| IMR-4064 | 39.0 | 2557 | — | 43.0 | 2824 | — |
| **Varget** | 36.0 | 2432 | 33,000 | **40.5** | **2741** | **43,700** |
| AA2520 | 31.4 | 2050 | 32,700 | 42.0 | 2605 | 44,500 |
| IMR-4320 | 41.0 | 2666 | — | 45.0 | 2898 | — |
| H-380 | 41.0 | 2525 | — | 46.0 | 2785 | — |
| N150 | 39.0 | 2444 | 32,600 | 44.0 | 2703 | 42,800 |
| 760 | 44.0 | 2430 | 32,700 | 49.0 | 2721 | 39,700 |
| IMR-4350 | 43.0 | 2475 | — | 48.0+ | 2785 | — |
| RX19 | 41.0 | 2040 | 31,000 | 50.8+ | 2681 | 45,400 |
| H-4831 | 49.0 | 2583 | — | 53.5+ | 2816 | — |
| RX22 | 44.8 | 2180 | 32,700 | 54.8+ | 2796 | 45,700 |

**150 gr. Jacketed HPBT** — 3.025" OAL — **BC:** .429 **SD:** .266

| Powder | Sugg Starting Grains | Velocity fps | Pressure C.U.P. | Max Load Grains | Velocity fps | Pressure C.U.P. |
|---|---|---|---|---|---|---|
| IMR-4895 | 32.0 | 2331 | 34,000 | 36.0 | 2619 | 45,500 |
| IMR-4064 | 36.0 | 2381 | — | 40.5 | 2640 | — |
| Varget | 34.5 | 2370 | 35,000 | 38.5 | 2617 | 45,100 |
| AA-2520 | 29.0 | 1894 | 31,200 | 38.4 | 2418 | 44,300 |
| IMR-4320 | 37.5 | 2334 | 33,300 | 41.5 | 2555 | 40,900 |
| **N150** | 38.7 | 2342 | 35,200 | **43.0** | **2576** | **45,100** |
| 760 | 41.3 | 2390 | 34,300 | 47.0 | 2664 | 43,900 |
| H-414 | 41.5 | 2316 | 29,700 | 46.0 | 2590 | 42,200 |
| IMR-4350 | 42.0 | 2427 | — | 47.0 | 2739 | — |
| RX19 | 43.5 | 2202 | 31,600 | 48.7 | 2529 | 44,900 |
| H-4831 | 48.0 | 2538 | — | 53.0+ | 2816 | — |
| RX22 | 45.0 | 2119 | 28,600 | 50.0+ | 2478 | 43,200 |

**162 gr. Jacketed BTSP** — 3.037" OAL — **BC:** .514 **SD:** .287

| Powder | Sugg Starting Grains | Velocity fps | Pressure C.U.P. | Max Load Grains | Velocity fps | Pressure C.U.P. |
|---|---|---|---|---|---|---|
| IMR-4064 | 36.3 | 2358 | 35,000 | 41.3 | 2597 | 44,200 |
| Varget | 33.5 | 2281 | 34,500 | 37.5 | 2514 | 44,400 |
| AA-2520 | 33.5 | 2185 | 30,900 | 37.5 | 2415 | 42,200 |
| IMR-4320 | 35.5 | 2181 | 32,800 | 40.5 | 2498 | 42,800 |
| H-380 | 36.0 | 2236 | 33,800 | 40.5 | 2446 | 43,000 |
| 760 | 40.0 | 2272 | 30,500 | 45.5 | 2560 | 44,800 |
| H-414 | 39.5 | 2296 | 32,900 | 44.0 | 2551 | 44,500 |
| **N160** | 40.8 | 2258 | 30,900 | **48.7** | **2563** | **43,000** |
| IMR-4350 | 39.4 | 2188 | 29,200 | 44.8 | 2564 | 44,700 |
| RX19 | 42.7 | 2234 | 31,400 | 47.5 | 2543 | 44,800 |
| H-4831 | 44.0 | 1905 | 24,600 | 48.0+ | 2560 | 44,900 |
| RX22 | 45.5 | 2158 | 28,300 | 49.5+ | 2492 | 43,600 |

**168 gr. Jacketed HPBT** — 3.050" OAL — **BC:** .494 **SD:** .298

| Powder | Sugg Starting Grains | Velocity fps | Pressure C.U.P. | Max Load Grains | Velocity fps | Pressure C.U.P. |
|---|---|---|---|---|---|---|
| IMR-4064 | 35.9 | 2327 | 24,600 | 40.8 | 2531 | 45,000 |
| Varget | 33.5 | 2253 | 35,500 | 37.0 | 2498 | 44,500 |
| IMR-4320 | 35.0 | 2178 | 32,300 | 39.8 | 2475 | 45,400 |
| H-414 | 38.0 | 2179 | 29,200 | 42.5 | 2484 | 43,500 |
| **N160** | 43.0 | 2201 | 31,200 | **48.0** | **2509** | **44,200** |
| IMR-4350 | 39.0 | 2199 | 31,300 | 44.4 | 2537 | 44,900 |
| RX19 | 38.0 | 1940 | 32,700 | 47.0+ | 2460 | 45,100 |
| XMR-3100 | 38.2 | 1859 | 32,000 | 47.8+ | 2427 | 45,300 |
| H-4831 | 42.2 | 2165 | 29,800 | 47.0+ | 2433 | 39,400 |
| RX22 | 40.2 | 2017 | 32,500 | 49.2+ | 2537 | 45,400 |

**175 gr. Jacketed GSSP** — 2.935" OAL — **BC:** .465 **SD:** .310

| Powder | Sugg Starting Grains | Velocity fps | Pressure C.U.P. | Max Load Grains | Velocity fps | Pressure C.U.P. |
|---|---|---|---|---|---|---|
| IMR-4064 | 35.0 | 2178 | — | 39.0 | 2439 | — |
| H-380 | 39.0 | 2320 | — | 43.0 | 2500 | — |
| 760 | 39.0 | 2169 | 33,000 | 44.5 | 2478 | 45,700 |
| H-414 | 39.0 | 2165 | 32,500 | 44.4 | 2465 | 44,300 |
| IMR-4350 | 41.0 | 2079 | — | 45.0 | 2531 | — |
| XMR-3100 | 38.0 | 1854 | 31,200 | 47.6+ | 2365 | 45,000 |
| H-4831 | 41.5 | 2134 | 31,400 | 46.0 | 2403 | 41,600 |
| RX22 | 38.6 | 1948 | 33,000 | 48.6+ | 2473 | 45,800 |
| **IMR-7828** | 44.0 | 2107 | 31,300 | **48.0+** | **2398** | **43,700** |

**#287641** — 160 gr. (#2 Alloy) 2.900" OAL — **BC:** .382 **SD:** .283

| Powder | Sugg Starting Grains | Velocity fps | Pressure C.U.P. | Max Load Grains | Velocity fps | Pressure C.U.P. |
|---|---|---|---|---|---|---|
| Unique | 9.7 | 1258 | 20,500 | 14.2 | 1625 | 33,400 |
| SR-7625 | 10.0 | 1153 | 20,200 | 11.7 | 1351 | 28,100 |
| SR-4759 | 19.7 | 1581 | 20,500 | 24.0 | 1919 | 35,200 |
| IMR-4227 | 22.0 | 1723 | 22,700 | 27.0 | 2066 | 38,600 |
| **XMP-5744** | **20.0** | **1672** | **21,600** | 29.0 | 2268 | 45,500 |
| AA-1680 | 23.2 | 1686 | 23,100 | 30.0 | 2094 | 38,200 |
| RX7 | 22.4 | 1647 | 21,900 | 26.5 | 1869 | 26,000 |
| IMR-3031 | 27.0 | 1687 | 20,500 | 34.8 | 2195 | 32,600 |
| AA-2230 | 29.4 | 1832 | 23,600 | 35.0 | 2155 | 33,100 |
| 748 | 33.5 | 1869 | 22,800 | 37.0 | 2104 | 32,700 |

**Note:** Loads shown in shaded panels are maximum.
Loads shown in bold designate potentially most accurate load.
\+ Designates a compressed powder charge.

# 284 Winchester

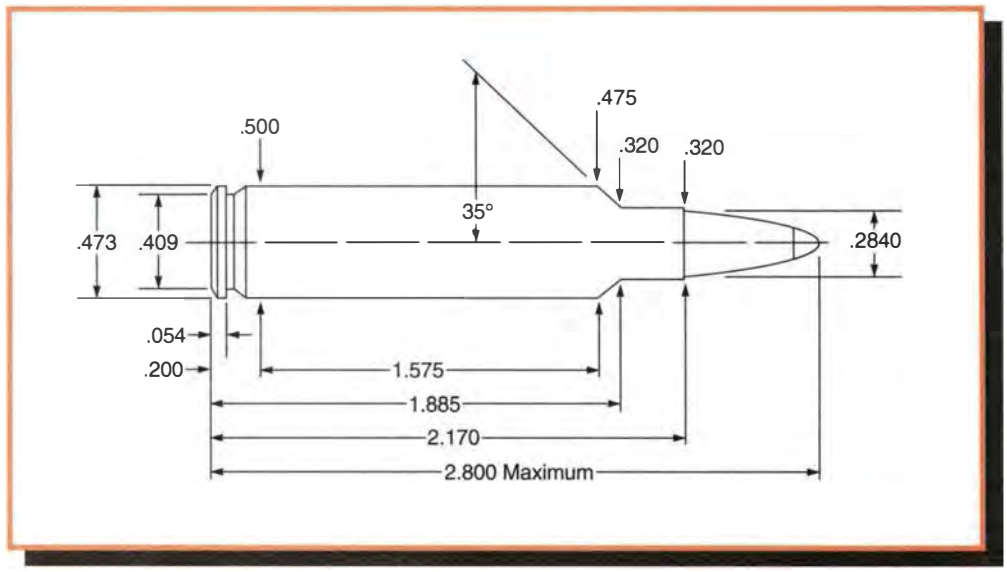


**Comments:**

The 284 Winchester was a departure in cartridge design for American shooters. Its rebated rim, larger diameter body, and 35-degree shoulder were designed to obtain greater ballistics than previously possible with a short action cartridge while using a standard bolt face. Winchester introduced the cartridge in 1963 in their Models 88 and 100 rifles while a few other manufacturers offered it at different times. Winchester currently lists a 150-grain factory loading although the 284 is pretty much extinct as a commercial cartridge. However, the idea of rebated rims lives on through the current trend of the Remington Ultra Mag and Winchester Short Magnum families. The 284 is presently most notable as the basis of the 475 Wildey pistol cartridge, the 6.5x284 Norma, and a few other wildcats popular among the varmint and long-range shooting fraternity.

**Test Components:**

Cases . . . . . .Winchester
Trim-to Length . . . . . .2.160"
Primers . . . . . .Winchester WLR
Primer Size . . . . . .Large Rifle
Lyman Shell Holder . . . . . .No. 2
Jacketed Bullets Used . . . . .Sierra SPT #1900, 120 gr.
Hornady SP #2820, 139 gr.
Sierra SBT #1913, 150 gr.
Cast Bullets Used . . . . . .(sized to .284" dia)
*gas check bullet *#287346, 135 gr.

**Test Specifications:**
**(Velocity & Pressure)**

Firearm Used . . . . . .Winchester Model 88, Universal Receiver
Barrel Length . . . . . .22"
Twist . . . . . .1-10"
Groove Dia. . . . . ..284"

**120 gr. Jacketed SPT** — 2.800" OAL — **BC:** .328 **SD:** .213

| Powder | Sugg Starting Grains | Velocity fps | Pressure C.U.P. | Max Load Grains | Velocity fps | Pressure C.U.P. |
|---|---|---|---|---|---|---|
| IMR-3031 | 41.0 | 2645 | — | 45.0 | 2932 | — |
| IMR-4895 | 42.0 | 2544 | — | 47.0 | 2890 | — |
| IMR-4064 | 44.0 | 2660 | — | 49.0 | 3003 | — |
| IMR-4320 | 44.0 | 2610 | — | 49.0 | 2967 | — |
| H-380 | 47.0 | 2590 | — | 53.0 | 2932 | — |
| **IMR-4350** | **51.0** | **2710** | — | 57.0+ | 3076 | — |
| RX19 | 52.5 | 2738 | 42,700 | 58.3 | 3113 | 53,700 |
| XMR-3100 | 53.0 | 2660 | 46,000 | 59.0+ | 3026 | 54,000 |
| H-4831 | 53.0 | 2557 | — | 59.0+ | 2949 | — |

**139 gr. Jacketed SP** — 2.800" OAL — **BC:** .392 **SD:** .246

| Powder | Sugg Starting Grains | Velocity fps | Pressure C.U.P. | Max Load Grains | Velocity fps | Pressure C.U.P. |
|---|---|---|---|---|---|---|
| IMR-3031 | 40.0 | 2525 | — | 44.5 | 2793 | — |
| IMR-4895 | 41.0 | 2427 | — | 46.0 | 2785 | — |
| IMR-4064 | 42.0 | 2506 | — | 47.5 | 2832 | — |
| IMR-4320 | 42.0 | 2444 | — | 47.5 | 2777 | — |
| H-380 | 47.0 | 2613 | 46,500 | 52.0 | 2820 | 53,200 |
| **IMR-4350** | **50.0** | **2617** | — | 55.0+ | 2906 | — |
| RX19 | 49.5 | 2533 | 42,000 | 55.0 | 2819 | 52,900 |
| XMR-3100 | 50.5 | 2441 | 43,200 | 56.0+ | 2766 | 53,100 |
| H-4831 | 52.0 | 2444 | — | 58.0+ | 2793 | — |

**Note:** Loads shown in shaded panels are maximum.
Loads shown in bold designate potentially most accurate load.
\+ Designates a compressed powder charge.

# 284 Winchester

**150 gr. Jacketed SBT**
2.800" OAL
**BC:** .436
**SD:** .266

| Powder | Sugg Starting Grains | Velocity fps | Pressure C.U.P. | Max Load Grains | Velocity fps | Pressure C.U.P. |
|---|---|---|---|---|---|---|
| IMR-3031 | 37.0 | 2298 | — | 41.0 | 2518 | — |
| IMR-4895 | 40.0 | 2488 | 42,100 | 45.5 | 2776 | 53,500 |
| IMR-4064 | 41.0 | 2487 | — | 46.0 | 2762 | — |
| IMR-4320 | 41.0 | 2525 | 44,900 | 45.5 | 2737 | 53,300 |
| H-380 | 43.0 | 2506 | 46,100 | 47.5 | 2651 | 53,300 |
| **IMR-4350** | 49.0 | 2610 | — | **54.0+** | **2816** | — |
| RX19 | 48.5 | 2548 | 42,100 | 54.0 | 2850 | 53,000 |
| XMR-3100 | 48.5 | 2373 | 40,100 | 54.0 | 2711 | 52,600 |
| H-4831 | 51.0 | 2439 | — | 57.0+ | 2724 | — |

**#287346**
135 gr. (#2 Alloy) 2.800" OAL
**BC:** .235
**SD:** .239

| Powder | Sugg Starting Grains | Velocity fps | Pressure C.U.P. | Max Load Grains | Velocity fps | Pressure C.U.P. |
|---|---|---|---|---|---|---|
| SR-4759 | 15.0 | 1528 | 23,000 | 22.0 | 2059 | 35,600 |
| **XMP-5744** | **16.0** | **1499** | **22,000** | 26.0 | 2114 | 34,600 |
| IMR-4198 | 16.0 | 1512 | 22,500 | 25.0 | 2063 | 30,500 |
| RX7 | 17.0 | 1535 | 23,000 | 26.0 | 2073 | 32,200 |

**Note:** Loads shown in shaded panels are maximum.
Loads shown in bold designate potentially most accurate load.
+ Designates a compressed powder charge.

# 280 Remington (7mm Express Remington)

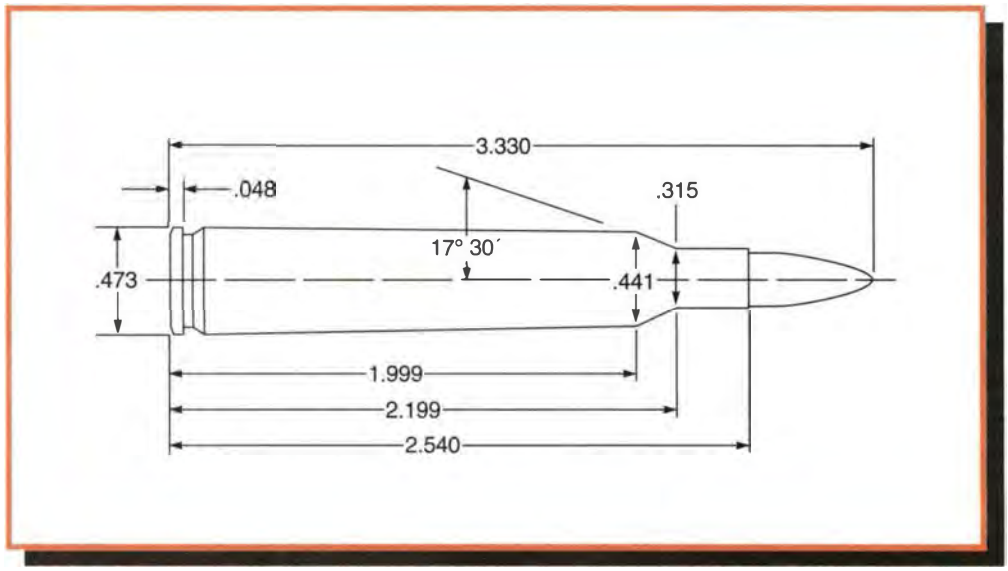


**Comments:**

This cartridge started life as the 280 Remington. When it proved less than popular it was subjected to a name change - 7mm Express Remington. With the name change came some modi ications of the factory loads. Eventually, Remington went back to the original designation.

Ballistically the 280 fills a very narrow gap between the 30-06 Springfield and the 270 Winchester. It seems best with bullets of about 160 to 162 grains, though it does well with a wide range of weights.

Hodgdon H4831 is particularly well suited to balancing uniform ballistics and accuracy in this cartridge. IMR 4350 is also a fine performer with this round.

**Test Components:**

Cases . . . . . .Remington
Trim-to Length . . . . . .2.530"
Primers . . . . . .Remington 9½
Primer Size . . . . . .Large Rifle
Lyman Shell Holder . . . . . .No. 2
Jacketed Bullets Used . . . . .Sierra SPT #1900, 120 gr.
Hornady SP #2820, 139 gr.
Nosler SP #16326, 150 gr.
Hornady BTSP #2845, 162 gr.
Sierra HPBT #1930, 168 gr.
Speer Grand Slam #1643, 175 gr.
Cast Bullets Used . . . . . .(sized to .284" dia)
*gas check bullet *#287346, 135 gr.
*#287641, 160 gr.

**Test Specifications: (Velocity & Pressure)**

Firearm Used . . . . . .Remington Model 700, Universal Receiver
Barrel Length . . . . . .Model 700 22", Universal Receiver 24"
Twist . . . . . .1-9½"
Groove Dia. . . . . .284"

**120 gr. Jacketed SPT** — 3.237" OAL — BC: .328 SD: .213

| Powder | Sugg Starting Grains | Velocity fps | Pressure C.U.P. | Max Load Grains | Velocity fps | Pressure C.U.P. |
|---|---|---|---|---|---|---|
| IMR-4064 | 44.0 | 2680 | — | 49.0 | 2976 | — |
| Varget | 43.5 | 2754 | 39,300 | 48.5 | 3002 | 47,400 |
| H-380 | 49.0 | 2754 | — | 54.0 | 3039 | — |
| H-414 | 46.0 | 2693 | 35,700 | 52.0 | 3003 | 44,200 |
| **IMR-4350** | 51.0 | 2747 | — | **57.0+** | **3144** | — |
| H-4831 | 53.0 | 2597 | — | 59.0+ | 3003 | — |

**139gr. Jacketed SP** — 3.270" OAL — BC: .392 SD: .246

| Powder | Sugg Starting Grains | Velocity fps | Pressure C.U.P. | Max Load Grains | Velocity fps | Pressure C.U.P. |
|---|---|---|---|---|---|---|
| IMR-4064 | 43.0 | 2531 | — | 48.5 | 2857 | — |
| Varget | 43.0 | 2604 | 38,300 | 46.0 | 2783 | 46,100 |
| RX15 | 43.0 | 2526 | 40,000 | 48.0 | 2780 | 47,900 |
| **H-414** | **47.0** | **2501** | **34,800** | 52.5 | 2797 | 47,400 |
| IMR-4350 | 48.5 | 2616 | 39,100 | 54.0 | 2912 | 49,000 |
| RX19 | 52.5 | 2631 | 37,800 | 58.2 | 2989 | 49,500 |
| H-4831 | 52.0 | 2518 | — | 58.0+ | 2873 | — |

**Note:** Loads shown in shaded panels are maximum.
Loads shown in bold designate potentially most accurate load.
\+ Designates a compressed powder charge.

# 280 Remington (7mm Express Remington)

**150gr. Jacketed SP** — 3.280" OAL — **BC:** .456 **SD:** .266

| Powder | Sugg Starting Grains | Velocity fps | Pressure C.U.P. | Max Load Grains | Velocity fps | Pressure C.U.P. |
|---|---|---|---|---|---|---|
| IMR-4064 | 43.0 | 2551 | — | 48.0 | 2840 | — |
| Varget | 40.0 | 2385 | 35,200 | 44.5 | 2646 | 46,600 |
| RX15 | 40.0 | 2396 | 37,800 | 44.5 | 2612 | 45,600 |
| 760 | 46.5 | 2546 | 39,600 | 53.0 | 2829 | 48,800 |
| H-414 | 46.5 | 2555 | 38,900 | 52.5 | 2871 | 49,000 |
| **IMR-4350** | 46.0 | 2480 | 38,500 | **52.5** | **2787** | **48,800** |
| XMR-3100 | 50.5 | 2473 | 38,700 | 56.3+ | 2761 | 49,700 |
| H-4831 | 51.0 | 2550 | — | 57.0+ | 2816 | — |

**162gr. Jacketed BTSP** — 3.320" OAL — **BC:** .514 **SD:** .287

| Powder | Sugg Starting Grains | Velocity fps | Pressure C.U.P. | Max Load Grains | Velocity fps | Pressure C.U.P. |
|---|---|---|---|---|---|---|
| IMR-4064 | 41.0 | 2426 | 38,000 | 47.0 | 2707 | 48,800 |
| Varget | 39.5 | 2347 | 38,900 | 43.0 | 2526 | 47,200 |
| 760 | 45.5 | 2441 | 38,300 | 51.7 | 2745 | 48,300 |
| H-414 | 44.0 | 2417 | 37,500 | 50.3 | 2729 | 49,900 |
| **IMR-4350** | 45.0 | 2379 | 34,700 | **51.5** | **2718** | **48,400** |
| RX19 | 48.0 | 2425 | 37,300 | 53.8 | 2751 | 48,800 |
| XMR-3100 | 49.5 | 2446 | 38,700 | 54.4 | 2722 | 49,100 |
| H-4831 | 51.0 | 2493 | 37,700 | 56.5+ | 2784 | 46,900 |
| RX22 | 49.0 | 2465 | 37,300 | 54.3 | 2747 | 47,900 |

**168gr. Jacketed HPBT** — 3.290" OAL — **BC:** .494 **SD:** .298

| Powder | Sugg Starting Grains | Velocity fps | Pressure C.U.P. | Max Load Grains | Velocity fps | Pressure C.U.P. |
|---|---|---|---|---|---|---|
| IMR-4064 | 40.0 | 2345 | 37,800 | 46.0 | 2632 | 49,300 |
| Varget | 39.0 | 2280 | 37,800 | 42.5 | 2474 | 45,900 |
| 760 | 44.0 | 2365 | 39,200 | 50.0 | 2653 | 49,400 |
| H-414 | 43.5 | 2377 | 37,700 | 49.5 | 2667 | 49,100 |
| **IMR-4350** | 46.0 | 2451 | 38,700 | **52.2** | **2735** | **50,000** |
| RX19 | 45.5 | 2375 | 38,000 | 52.6 | 2675 | 49,800 |
| XMR-3100 | 46.0 | 2298 | 37,300 | 52.0 | 2575 | 49,400 |
| H-4831 | 47.5 | 2338 | 36,000 | 54.0 | 2658 | 49,500 |
| RX22 | 47.0 | 2402 | 38,300 | 53.0 | 2692 | 49,800 |

**175gr. Jacketed GSSP** — 3.300" OAL — **BC:** .465 **SD:** .310

| Powder | Sugg Starting Grains | Velocity fps | Pressure C.U.P. | Max Load Grains | Velocity fps | Pressure C.U.P. |
|---|---|---|---|---|---|---|
| IMR-4064 | 40.0 | 2252 | — | 43.0 | 2463 | — |
| Varget | 36.5 | 2176 | 38,200 | 40.5 | 2381 | 46,700 |
| 760 | 41.5 | 2219 | 38,200 | 47.2 | 2493 | 49,100 |
| H-414 | 40.5 | 2227 | 39,000 | 46.3 | 2502 | 49,800 |
| **IMR-4350** | 41.5 | 2247 | 37,500 | **47.5** | **2520** | **47,700** |
| H-4831 | 48.0 | 2212 | — | 53.0 | 2518 | — |

**#287346** — 135 gr. (#2 Alloy) 3.176" OAL — **BC:** .235 **SD:** .239

| Powder | Sugg Starting Grains | Velocity fps | Pressure C.U.P. | Max Load Grains | Velocity fps | Pressure C.U.P. |
|---|---|---|---|---|---|---|
| SR-4759 | 27.5 | 2213 | 40,500 | 30.5 | 2374 | 44,000 |
| **XMP-5744** | **29.5** | **2221** | **34,200** | 33.0 | 2364 | 37,400 |
| AA-1680 | 28.5 | 2160 | 33,900 | 31.5 | 2359 | 42,700 |
| RX7 | 31.5 | 2273 | 31,700 | 35.0 | 2388 | 34,500 |
| IMR-3031 | 34.0 | 2331 | 28,300 | 38.0 | 2383 | 32,100 |
| 748 | 37.5 | 2188 | 27,700 | 41.5 | 2373 | 30,400 |
| IMR-4895 | 34.5 | 2209 | 29,700 | 38.5 | 2364 | 33,300 |

**#287641** — 160 gr. (#2 Alloy) 3.205" OAL — **BC:** .382 **SD:** .283

| Powder | Sugg Starting Grains | Velocity fps | Pressure C.U.P. | Max Load Grains | Velocity fps | Pressure C.U.P. |
|---|---|---|---|---|---|---|
| Unique | 15.5 | 1596 | 26,800 | 19.0 | 1815 | 40,400 |
| SR-7625 | 13.0 | 1349 | 21,500 | 17.0 | 1637 | 41,200 |
| SR-4756 | 15.0 | 1483 | 23,500 | 19.0 | 1773 | 41,700 |
| **SR-4759** | **24.5** | **1872** | **26,000** | 29.6 | 2145 | 39,800 |
| AA-1680 | 28.5 | 1864 | 21,300 | 34.4 | 2155 | 34,300 |
| IMR-3031 | 33.5 | 1984 | 20,000 | 38.6 | 2301 | 32,600 |
| XMR-2015 | 31.0 | 1991 | 22,500 | 36.0 | 2206 | 31,600 |
| RX7 | 25.5 | 1792 | 18,800 | 30.5 | 2040 | 27,900 |
| AA-2230 | 34.0 | 2017 | 24,800 | 39.5 | 2298 | 35,800 |
| 748 | 38.0 | 1930 | 20,000 | 44.0 | 2362 | 35,000 |
| IMR-4895 | 32.0 | 1908 | 21,000 | 35.3 | 2020 | 22,700 |

**Note:** Loads shown in shaded panels are maximum.
Loads shown in bold designate potentially most accurate load.
\+ Designates a compressed powder charge.

# 7mm Remington Magnum

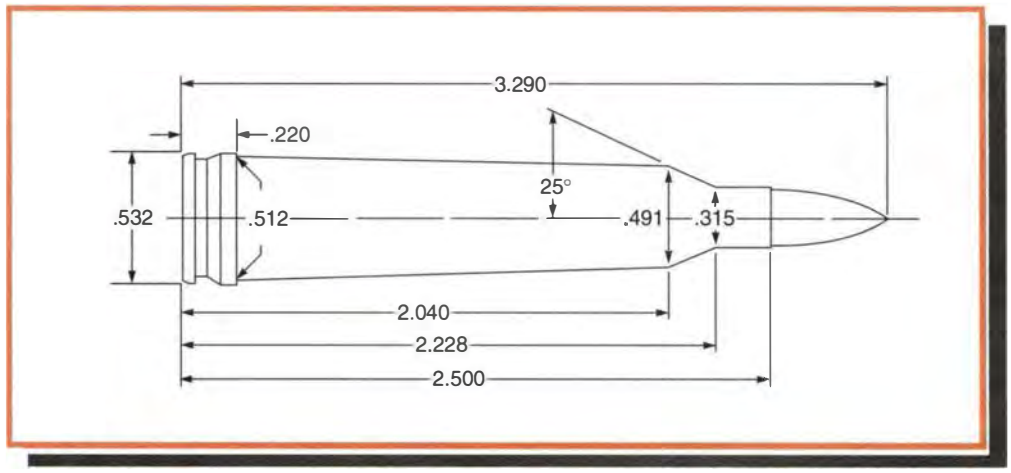


**Comments:**

This is easily the third most popular big game cartridge in this country. It started with the need for a cartridge with more punch than the 30-06 but not more recoil.

The 7mm Remington Magnum has been used to take every big game animal that walks on this continent. It really peaks out however with game as large as elk, although some would disagree. Bullets of 160 to 175 grains are best when the game gets tough.

Magnum primers and slow burning propellants such as Hodgdon H4831 and IMR 7828 are naturals for this application. Hercules Reloder 22 would also be a good choice.

Cast bullets need to be kept under 1800 fps for acceptable accuracy.

**Test Components:**

Cases . . . . . .Remington
Trim-to Length . . . . . .2.490"
Primers . . . . . .Remington 9½M
Primer Size . . . . . .Large Ri le Magnum
Lyman Shell Holder . . . . . .No. 13
Jacketed Bullets Used . . .Hornady V-Max #22810, 120 gr.
Speer SP #1623, 130 gr.
Nosler SP #16325, 140 gr.
Comb. Tech. Bal. Silvertip #51110, 150 gr.
Hornady SP #2830, 154 gr.
Combined Tech. Fail Safe #53160, 160 gr.
Sierra HPBT #1930, 168 gr.
Speer Grand Slam #1643, 175 gr.
Cast Bullets Used . . . . . .(sized to .284" dia)
*gas check bullet *#287641, 160 gr.

**Test Specifications:**
**(Velocity & Pressure)**

Firearm Used . . . . . .Universal Receiver
Barrel Length . . . . . .24" (PSI),
26" (CUP)
Twist . . . . . .1-9½"
Groove Dia. . . . . .284"

**120gr. Jacketed V-Max** — BC: .365 SD: .213
3.290" OAL

| Powder | Sugg Starting Grains | Velocity fps | Pressure P.S.I. | Max Load Grains | Velocity fps | Pressure P.S.I. |
|---|---|---|---|---|---|---|
| IMR-4064 | 55.5 | 3037 | 45,900 | 61.5 | 3302 | 58,900 |
| H-414 | 57.0 | 2938 | 44,600 | 63.0 | 3267 | 59,700 |
| **N160** | 61.0 | 3013 | 47,400 | **67.5** | **3290** | **60,300** |
| IMR-4350 | 61.0 | 2990 | 44,300 | 68.0 | 3340 | 59,500 |
| WXR | 66.0 | 2990 | 42,800 | 73.0 | 3348 | 59,900 |
| XMR-3100 | 63.5 | 2929 | 43,900 | 70.5 | 3264 | 59,300 |
| H-4831 | 65.5 | 2957 | 43,600 | 73.0 | 3283 | 59,000 |
| RX22 | 66.0 | 2990 | 43,700 | 73.0 | 3366 | 59,800 |
| IMR-7828 | 65.0 | 2927 | 43,000 | 72.0+ | 3290 | 58,800 |
| H-1000 | 70.0 | 3011 | 44,500 | 77.0+ | 3318 | 59,000 |

**130gr. Jacketed SP** — BC: .394 SD: .230
3.235" OAL

| Powder | Sugg Starting Grains | Velocity fps | Pressure | Max Load Grains | Velocity fps | Pressure |
|---|---|---|---|---|---|---|
| IMR-4064 | 53.0 | 2914 | 42,400 | 59.5 | 3185 | 52,000 C |
| H-414 | 56.0 | 2859 | 47,000 | 62.0 | 3120 | 59,200 P |
| N160 | 57.0 | 2909 | 52,300 | 63.5 | 3125 | 60,700 P |
| IMR-4350 | 58.5 | 2946 | 49,400 | 65.0 | 3186 | 59,200 P |
| WXR | 61.0 | 2916 | 47,400 | 68.0 | 3186 | 58,900 P |
| **XMR-3100** | **62.0** | **2902** | **48,600** | 69.0 | 3133 | 58,100 P |
| H-4831 | 64.0 | 2887 | 38,600 | 71.0 | 3310 | 52,400 C |
| RX22 | 65.0 | 2992 | 48,000 | 72.0 | 3270 | 59,600 P |
| IMR-7828 | 64.5 | 2941 | 47,800 | 70.5+ | 3225 | 60,900 P |
| H-1000 | 68.5 | 2996 | 49,800 | 75.0+ | 3228 | 60,600 P |

**Note:** Loads shown in shaded panels are maximum.
Loads shown in bold designate potentially most accurate load.
\+ Designates a compressed powder charge.
In pressure column, C=Copper Units of Pressure (CUP); P=Pounds per Square Inch (PSI)

# 7mm Remington Magnum

**140 gr. Jacketed SP** — 3.290" OAL — **BC:** .434 **SD:** .248

| Powder | Sugg Starting Grains | Velocity fps | Pressure | Max Load Grains | Velocity fps | Pressure |
|---|---|---|---|---|---|---|
| IMR-4064 | 46.3 | 2674 | 37,700 | 54.5 | 3038 | 51,700 C |
| H-414 | 49.5 | 2702 | 39,100 | 58.0 | 3017 | 51,500 C |
| N160 | 55.0 | 2788 | 49,800 | 61.0 | 2993 | 58,400 P |
| IMR-4350 | 58.0 | 2842 | 42,400 | 66.0 | 3133 | 52,000 C |
| WXR | 60.0 | 2846 | 47,700 | 67.0 | 3110 | 59,600 P |
| XMR-3100 | 61.0 | 2819 | 48,800 | 68.0 | 3083 | 60,900 P |
| H-4831 | 62.0 | 2791 | 39,000 | 67.5 | 3146 | 50,600 C |
| RX22 | 64.5 | 3037 | 42,900 | 70.5 | 3275 | 59,000 P |
| IMR-7828 | 62.0 | 2834 | 47,300 | 68.5 | 3105 | 59,100 P |
| **H-1000** | 66.0 | 2885 | 48,200 | **72.7+** | **3139** | **60,600 P** |

**150 gr. Jacketed Silvertip** — 3.290" OAL — **BC:** .493 **SD:** .266

| Powder | Sugg Starting Grains | Velocity fps | Pressure P.S.I. | Max Load Grains | Velocity fps | Pressure P.S.I. |
|---|---|---|---|---|---|---|
| H-414 | 54.0 | 2639 | 44,400 | 60.0 | 2940 | 60,000 |
| N160 | 54.0 | 2642 | 44,200 | 60.6 | 2918 | 59,100 |
| IMR-4350 | 57.5 | 2700 | 45,000 | 64.0 | 3013 | 59,800 |
| IMR-4831 | 59.5 | 2729 | 44,200 | 66.0 | 3053 | 59,800 |
| WXR | 60.0 | 2735 | 45,800 | 67.0 | 3041 | 59,900 |
| XMR-3100 | 61.0 | 2591 | 41,700 | 67.5 | 2955 | 58,900 |
| H-4831 | 60.0 | 2701 | 45,200 | 67.0 | 2975 | 58,700 |
| RX22 | 60.0 | 2742 | 43,900 | 67.0 | 3106 | 60,400 |
| IMR-7828 | 61.0 | 2701 | 44,300 | 68.0 | 3035 | 59,800 |
| H-1000 | 65.0 | 2713 | 42,600 | 71.5 | 3030 | 58,700 |
| **RX25** | 64.5 | 2682 | 40,600 | **72.0** | **3086** | **58,900** |

**154 gr. Jacketed SP** — 3.290" OAL — **BC:** .433 **SD:** .273

| Powder | Sugg Starting Grains | Velocity fps | Pressure | Max Load Grains | Velocity fps | Pressure |
|---|---|---|---|---|---|---|
| H-414 | 53.5 | 2570 | 47,000 | 59.2 | 2856 | 60,700 P |
| N160 | 52.0 | 2627 | 52,700 | 58.0 | 2797 | 59,600 P |
| IMR-4350 | 55.0 | 2723 | 40,300 | 63.0 | 3012 | 51,400 C |
| IMR-4831 | 57.5 | 2738 | 50,400 | 64.0 | 2952 | 59,800 P |
| WXR | 60.0 | 2764 | 52,300 | 66.5 | 2966 | 60,700 P |
| **XMR-3100** | 59.5 | 2669 | 50,400 | **66.0** | **2891** | **59,900 P** |
| H-4831 | 59.0 | 2710 | 37,700 | 66.0 | 3051 | 51,200 C |
| RX22 | 60.0 | 2755 | 48,200 | 67.0 | 3014 | 59,800 P |
| IMR-7828 | 61.0 | 2743 | 50,400 | 68.0 | 2972 | 60,500 P |
| H-1000 | 64.0 | 2818 | 56,100 | 71.0 | 2953 | 59,600 P |
| RX25 | 64.5 | 2842 | 53,200 | 71.5 | 3021 | 59,600 P |

**160 gr. Jacketed Fail Safe** — 3.290" OAL — **BC:** .382 **SD:** .283

| Powder | Sugg Starting Grains | Velocity fps | Pressure P.S.I. | Max Load Grains | Velocity fps | Pressure P.S.I. |
|---|---|---|---|---|---|---|
| N160 | 52.0 | 2690 | 50,300 | 57.0 | 2801 | 59,300 |
| IMR-4350 | 55.0 | 2598 | 48,000 | 61.1 | 2839 | 59,500 |
| IMR-4831 | 56.5 | 2626 | 48,100 | 63.0 | 2867 | 59,300 |
| WXR | 56.5 | 2594 | 47,400 | 63.0 | 2853 | 59,300 |
| XMR-3100 | 59.5 | 2543 | 45,200 | 65.0 | 2832 | 59,500 |
| H-4831 | 59.5 | 2622 | 48,700 | 66.0 | 2848 | 59,800 |
| **RX22** | 60.0 | 2647 | 46,100 | **66.0** | **2933** | **59,400** |
| IMR-7828 | 60.5 | 2595 | 45,800 | 67.0 | 2893 | 60,500 |
| H1000 | 63.5 | 2572 | 45,000 | 70.5 | 2867 | 60,600 |
| RX25 | 62.5 | 2603 | 43,200 | 69.2 | 2919 | 57,600 |

**168 gr. Jacketed HPBT** — 3.290" OAL — **BC:** .488 **SD:** .298

| Powder | Sugg Starting Grains | Velocity fps | Pressure | Max Load Grains | Velocity fps | Pressure |
|---|---|---|---|---|---|---|
| N160 | 50.0 | 2600 | 49,400 | 56.5 | 2817 | 59,500 P |
| IMR-4350 | 53.0 | 2571 | 37,700 | 61.0 | 2925 | 52,000 C |
| IMR-4831 | 58.0 | 2638 | 45,900 | 64.0 | 2915 | 60,500 P |
| WXR | 58.0 | 2659 | 47,800 | 64.0 | 2919 | 60,600 P |
| **H-4831** | 59.0 | 2685 | 38,600 | **65.0** | **2971** | **52,000 C** |
| RX22 | 57.0 | 2594 | 38,500 | 66.0 | 2978 | 50,400 C |
| IMR-7828 | 61.5 | 2622 | 37,500 | 69.0 | 2946 | 52,100 C |
| H-1000 | 65.5 | 2645 | 38,500 | 73.0 | 2971 | 51,100 C |
| RX25 | 61.5 | 2594 | 41,900 | 68.5 | 2943 | 59,200 P |
| AA8700 | 70.0 | 2629 | 37,800 | 78.5 | 2948 | 49,900 C |

**175 gr. Jacketed GSSP** — 3.260" OAL — **BC:** .465 **SD:** .310

| Powder | Sugg Starting Grains | Velocity fps | Pressure | Max Load Grains | Velocity fps | Pressure |
|---|---|---|---|---|---|---|
| N160 | 50.5 | 2449 | 53,300 | 56.0 | 2629 | 60,300 P |
| IMR-4350 | 52.0 | 2498 | 50,300 | 58.0 | 2706 | 60,200 P |
| IMR-4831 | 53.5 | 2515 | 49,600 | 59.5 | 2732 | 60,200 P |
| WXR | 55.5 | 2616 | 53,400 | 62.5 | 2787 | 60,300 P |
| H-4831 | 53.7 | 2521 | 40,200 | 60.0 | 2748 | 46,400 C |
| **RX22** | 56.0 | 2566 | 49,400 | **62.5** | **2797** | **60,300 P** |
| IMR-7828 | 61.3 | 2620 | 40,200 | 68.5 | 2910 | 51,100 C |
| H-1000 | 61.0 | 2559 | 40,200 | 71.0 | 2897 | 51,400 C |
| RX25 | 62.0 | 2687 | 53,300 | 68.5 | 2871 | 59,900 P |
| AA8700 | 71.0 | 2481 | 42,700 | 77.0+ | 2799 | 57,600 P |

**Note:** Loads shown in shad d panels are maximum.
Loads shown in bold designate potentially most accurate load.
\+ Designates a compressed powder charge.
In pressure column, C=Copp r Units of Pressure (CUP); P=Pounds per Square Inch (PSI)

# 7mm Remington Magnum

**#287641**
160 gr. (#2 Alloy) 3.170" OAL

**BC:** .382
**SD:** .283

| Powder | Sugg Starting Grains | Velocity fps | Pressure | Max Load Grains | Velocity fps | Pressure |
|---|---|---|---|---|---|---|
| Unique | 17.0 | 1680 | 24,300 | 21.5 | 1917 | 36,200 C |
| SR-4756 | 18.5 | 1694 | 26,000 | 22.0 | 1880 | 36,700 C |
| SR-4759 | 29.0 | 2023 | 25,500 | 38.0 | 2440 | 48,000 C |
| IMR-4227 | 31.0 | 2067 | 25,800 | 36.0 | 2282 | 35,000 C |
| IMR-4198 | 32.0 | 2082 | 24,000 | 41.0 | 2462 | 39,300 C |
| **XMP-5744** | **22.5** | **1611** | **15,800** | 40.0 | 2432 | 43,500 P |
| RX7 | 35.0 | 2151 | 26,000 | 46.0 | 2613 | 45,000 C |

**Note:** Loads shown in shaded panels are maximum.
Loads shown in bold designate potentially most accurate load.
C=Copper Units of Pressure (CUP); P=Pounds per Square Inch (PSI)

# 7mm Weatherby Magnum

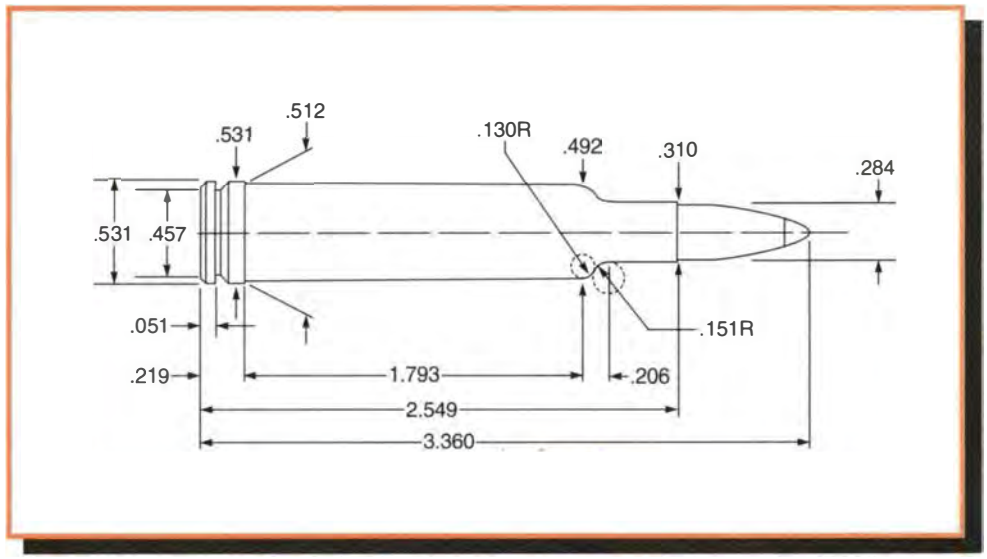


**Comments:**

This is one of Roy Weatherby's original cartridges developed in 1943. The 7mm shares the double-radius shoulder and 300 H&H parent case of its siblings, the 270 and 300 Weatherby Magnums. The 7mm has never been one of the more poplar calibers in the Weatherby line. It has been largely overshadowed by the 7mm Remington Magnum despite a slight ballistic advantage. What the future holds for the 7mm Weatherby remains to be seen due to the recent introduction of several high performance 7mm Magnum cartridges by the major manufacturers. Nevertheless, it is a capable cartridge suitable for thin-skinned game most anywhere in the world.

Like other Weatherbys, slow burning powders and premium bullets are in order. Shooters should also refrain from overheating the barrel with sustained firing. Hodgdon's H-4831 has been extensively used by reloaders over the years. Reloder 22 and H-1000 also gave good ballistic uniformity in our tests. Weatherby recommends the use of Federal 215 Magnum primers for all jacketed loads. Those loading cast bullet #287641 should use standard primers as indicated. This data is intended for commercially produced and chambered rifles. It is not for use in custom guns that may lack the free bore found in standard Weatherby chambers.

**Test Components:**

Cases . . . . . .Federal
Trim-to Length . . . . . .2.540"
Primers . . . . . .Federal 215 Mag and 210
Primer Size . . . . . .Large Rifle, Magnum & Standard
Lyman Shell Holder . . . . . .No. 13
Jacketed Bullets Used . . .Nosler Partition #16325, 140 gr.
Nosler Ballistic Silvertip, #51110, 150 gr.
Combined Tech. Fail Safe #53160, 160 gr.
Speer Grand Slam #1643, 175 gr.
Cast Bullets Used . . . . . .(sized to .284" dia)
*gas check bullet *#287641, 160 gr.

**Test Specifications:**
**(Velocity Only)**

Firearm Used . . . . . .Weatherby Mk V
Barrel Length . . . . . .26"
Twist . . . . . .1-10"
Groove Dia. . . . . ..284"

**140 gr. Jacketed SP** — 3.300" OAL — **BC:** .434 **SD:** .248

| Powder | Sugg Starting Grains | Velocity fps | Pressure | Max Load Grains | Velocity fps | Pressure |
|---|---|---|---|---|---|---|
| IMR-4831 | 67.0 | 3043 | — | 71.0 | 3259 | — |
| XMR-3100 | 67.0 | 3001 | — | 70.5 | 3197 | — |
| H-4831 | 69.0 | 3028 | — | 73.0 | 3219 | — |
| RX22 | 68.0 | 3044 | — | 72.0 | 3317 | — |
| IMR-7828 | 68.0 | 2979 | — | 72.0 | 3248 | — |
| **H1000** | 73.0 | 3021 | — | **77.0** | **3245** | — |

**150 gr. Jacketed Bal. Silvertip** — 3.250" OAL — **BC:** .493 **SD:** .266

| Powder | Sugg Starting Grains | Velocity fps | Pressure | Max Load Grains | Velocity fps | Pressure |
|---|---|---|---|---|---|---|
| IMR-4831 | 65.5 | 2939 | — | 69.0 | 3148 | — |
| XMR-3100 | 66.5 | 2976 | — | 70.0 | 3176 | — |
| H-4831 | 67.0 | 3011 | — | 71.0 | 3139 | — |
| RX22 | 66.5 | 2978 | — | 70.0 | 3203 | — |
| IMR-7828 | 66.5 | 2905 | — | 70.0 | 3138 | — |
| **H1000** | 73.0 | 3058 | — | **77.0** | **3197** | — |

**Note:** Loads shown in shaded panels are maximum.
Loads shown in bold designate potentially most accurate load.

# 7mm Weatherby Magnum

**160 gr. Jacketed Fail Safe**
3.250" OAL
**BC:** .382
**SD:** .283

| Powder | Sugg Starting Grains | Velocity fps | Pressure | Max Load Grains | Velocity fps | Pressure |
|---|---|---|---|---|---|---|
| IMR-4831 | 64.0 | 2802 | — | 68.0 | 2994 | — |
| XMR-3100 | 65.5 | 2812 | — | 69.0 | 3007 | — |
| H-4831 | 66.5 | 2834 | — | 70.0 | 3017 | — |
| **RX22** | 65.5 | 2811 | — | **69.0** | **3008** | — |
| IMR-7828 | 66.0 | 2787 | — | 69.5 | 3014 | — |
| H1000 | 70.0 | 2826 | — | 74.5 | 3004 | — |

**175 gr. Jacketed GSSP**
3.350" OAL
**BC:** .465
**SD:** .310

| Powder | Sugg Starting Grains | Velocity fps | Pressure | Max Load Grains | Velocity fps | Pressure |
|---|---|---|---|---|---|---|
| XMR-3100 | 64.0 | 2730 | — | 67.5 | 2911 | — |
| H-4831 | 65.5 | 2766 | — | 69.0 | 2915 | — |
| RX22 | 64.0 | 2738 | — | 67.5 | 2865 | — |
| IMR-7828 | 65.5 | 2751 | — | 69.0 | 2931 | — |
| **H1000** | **69.0** | **2720** | — | 73.0 | 2902 | — |

***#287641**
160 gr. (#2 Alloy) 3.250" OAL
**BC:** .382
**SD:** .283

| Powder | Sugg Starting Grains | Velocity fps | Pressure | Max Load Grains | Velocity fps | Pressure |
|---|---|---|---|---|---|---|
| SR-4759 | 19.0 | 1620 | — | 26.0 | 2008 | — |
| IMR-4227 | 20.5 | 1609 | — | 28.5 | 2013 | — |
| XMP-5744 | 21.0 | 1604 | — | 28.5 | 1998 | — |
| **IMR-4198** | 20.0 | 1591 | — | **28.5** | **1996** | — |
| RX7 | 21.0 | 1622 | — | 29.5 | 2002 | — |

**Note:** Loads shown in shaded panels are maximum.
Loads shown in bold designate potentially most accurate load.
* Designates use of 210 primers.

# 7mm WSM (Winchester Short Magnum)

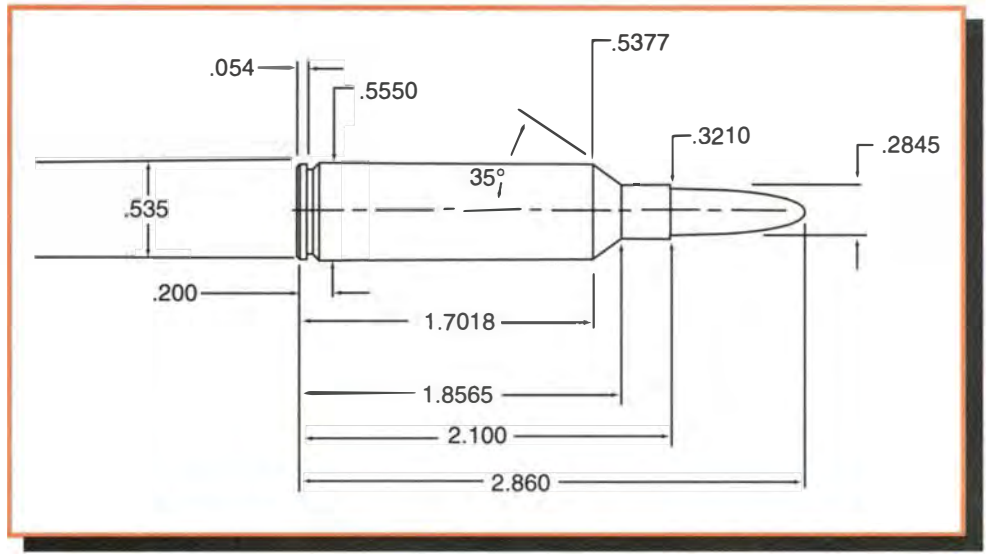


**Comments:**

The 7mm WSM is Winchester's first development in the .284" bore size since their 284 nearly forty years ago. Like its 300 and 270 WSM brethren, the 7mm WSM is designed to take advantage of the short stubby position of powder for more efficient ignition. The WSM is a non-belted design and will function in short actions unlike most other high performance 7mm chamberings. The 7mm WSM features a longer body and shorter neck to prevent the cartridge from being mistakenly chambered in 270 WSM chambered rifles. On paper, ballistics of the 7mm WSM are on par with the time honored 7mm Remington Magnum. Data is provided for shooters to duplicate the 160-grain Fail-Safe® factory load. Barnes Bullets does not recommend data for their coated XLC bullets be used for uncoated bullets. The 7mm WSM displayed unusually good ballistic uniformity with nearly every powder tested. IMR-4350, IMR-4831, Reloder 19, and WXR performed especially well. The short neck found on the 7mm WSM prevented effective use of our current cast bullet designs.

**Test Components:**

Cases . . . . . .Winchester
Trim-to Length . . . . . .2.090"
Primers . . . . . .Winchester
Primer Size . . . . . .Large Rifle Magnum
Lyman Shell Holder . . . . . .No. 34
Jacketed Bullets Used . . . . .Sierra SPT #1900, 120 gr.
Nosler Ballistic Tip #28140, 140 gr.
Nosler Bal. SilverTip #51110, 150 gr.
Comb. Tech. Fail Safe #53160, 160 gr.
Barnes XLC #28458, 160 gr.

**Test Specifications:**
**(Velocity & Pressure)**

Firearm Used . . . . . .Universal Receiver
Barrel Length . . . . . .24"
Twist . . . . . .1-9½"
Groove Dia. . . . . .284"

**120 gr. Jacketed SPT** — 2.760" OAL — **BC:** .328 **SD:** .213

| Powder | Sugg Starting Grains | Velocity fps | Pressure P.S.I. | Max Load Grains | Velocity fps | Pressure P.S.I. |
|---|---|---|---|---|---|---|
| IMR-4350 | 61.5 | 2982 | 45,200 | 68.5 | 3407 | 61,500 |
| 760 | 62.0 | 3170 | 52,100 | 69.0 | 3433 | 61,900 |
| XMR-4350 | 62.5 | 3025 | 45,500 | 69.5 | 3431 | 62,100 |
| IMR-4831 | 64.0 | 2997 | 44,900 | 71.0 | 3437 | 62,200 |
| **RX19** | 66.5 | 3060 | 47,200 | **74.0+** | **3443** | **61,900** |

**140 gr. Jacketed Ballistic Tip** — 2.810" OAL — **BC:** .485 **SD:** .248

| Powder | Sugg Starting Grains | Velocity fps | Pressure P.S.I. | Max Load Grains | Velocity fps | Pressure P.S.I. |
|---|---|---|---|---|---|---|
| H-414 | 58.5 | 2941 | 51,600 | 65.0 | 3198 | 62,200 |
| 760 | 58.5 | 2896 | 49,000 | 65.0 | 3196 | 61,500 |
| IMR-4350 | 58.5 | 2833 | 46,400 | 65.0 | 3197 | 61,500 |
| XMR-4350 | 60.0 | 2835 | 45,200 | 66.5 | 3226 | 62,100 |
| **IMR-4831** | 61.0 | 2878 | 47,100 | **68.0+** | **3243** | **62,600** |
| N560 | 62.5 | 2832 | 45,800 | 69.5+ | 3188 | 59,700 |
| XMR-3100 | 62.5 | 2825 | 47,000 | 69.5+ | 3181 | 61,300 |
| RX19 | 64.0 | 2912 | 47,700 | 71.0 | 3276 | 62,800 |
| WXR | 64.0 | 2868 | 46,700 | 71.0+ | 3231 | 61,300 |
| MAGPRO | 70.0 | 3013 | 49,700 | 74.5+ | 3256 | 60,400 |

**Note:** Loads shown in shaded panels are maximum.
Loads shown in bold designate potentially most accurate load.
+ Designates a compressed powder charge.

# 7mm WSM (Winchester Short Magnum)

**150 gr. Jacketed Silvertip**
2.850" OAL
**BC:** .493
**SD:** .266

| Powder | Sugg Starting Grains | Velocity fps | Pressure P.S.I. | Max Load Grains | Velocity fps | Pressure P.S.I. |
|---|---|---|---|---|---|---|
| H-414 | 56.5 | 2804 | 51,900 | 63.0 | 3041 | 60,200 |
| 760 | 57.0 | 2807 | 51,100 | 63.5 | 3058 | 60,700 |
| **IMR-4350** | 58.0 | 2755 | 47,400 | **64.5** | **3100** | **61,900** |
| XMR-4350 | 59.5 | 2752 | 46,100 | 66.0 | 3119 | 62,600 |
| IMR-4831 | 61.0 | 2775 | 47,000 | 67.5 | 3133 | 62,000 |
| XMR-3100 | 61.5 | 2722 | 46,400 | 68.5+ | 3073 | 60,900 |
| RX19 | 63.0 | 2805 | 47,700 | 70.0 | 3155 | 62,300 |
| WXR | 63.0 | 2761 | 46,900 | 70.0+ | 3119 | 61,600 |
| MAGPRO | 70.0 | 2943 | 51,800 | 74.0+ | 3135 | 59,900 |

**160 gr. Jacketed Fail Safe**
2.770" OAL
**BC:** .382
**SD:** .283

| Powder | Sugg Starting Grains | Velocity fps | Pressure P.S.I. | Max Load Grains | Velocity fps | Pressure P.S.I. |
|---|---|---|---|---|---|---|
| H-414 | 53.0 | 2601 | 48,000 | 59.0 | 2894 | 61,800 |
| 760 | 56.5 | 2770 | 57,200 | 59.5 | 2899 | 63,200 |
| IMR-4350 | 57.0 | 2670 | 48,800 | 63.5 | 2977 | 62,700 |
| XMR-4350 | 58.0 | 2672 | 47,900 | 64.5 | 2978 | 61,900 |
| **IMR-4831** | 59.5 | 2695 | 48,200 | **66.0** | **2996** | **61,800** |
| XMR-3100 | 60.5 | 2621 | 46,700 | 67.5+ | 2952 | 60,700 |
| RX19 | 61.5 | 2715 | 48,600 | 68.5 | 3034 | 62,500 |
| WXR | 62.5 | 2688 | 48,100 | 69.5+ | 3013 | 60,900 |
| MAGPRO | 69.0 | 2783 | 49,400 | 75.0+ | 3017 | 62,400 |

**160 gr. Barnes XLC**
2.775" OAL
**BC:** .508
**SD:** .283

| Powder | Sugg Starting Grains | Velocity fps | Pressure P.S.I. | Max Load Grains | Velocity fps | Pressure P.S.I. |
|---|---|---|---|---|---|---|
| IMR-4350 | 57.0 | 2583 | 46,400 | 63.5+ | 2944 | 61,200 |
| RX19 | 62.0 | 2685 | 48,200 | 69.0 | 3002 | 61,400 |
| **WXR** | 61.5 | 2662 | 47,400 | **68.5+** | **2956** | **59,000** |
| IMR-7828 | 62.0 | 2705 | 49,000 | 69.0+ | 2997 | 60,400 |
| MAGPRO | 72.0 | 2920 | 54,300 | 75.0+ | 3014 | 60,500 |

**Note:** Loads shown in shaded panels are maximum.
Loads shown in bold designate potentially most accurate load.
\+ Designates a compressed powder charge.

# 7mm Rem. Short Action Ultra Mag

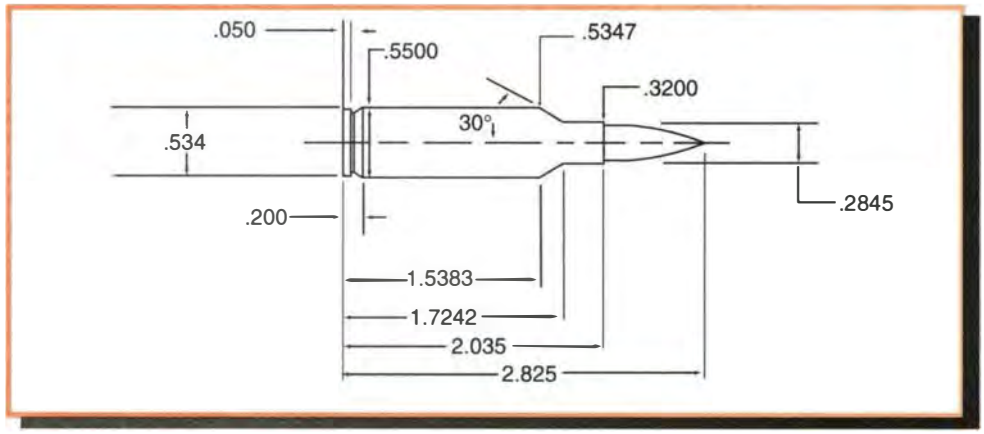


**Comments:**

Newly introduced for 2002, this is the second short action version of the non-belted Ultra Mag family of cartridges from Remington. The 7mm SAUM shares the 30-degree shoulder of its parent, the 300 SAUM, but has a nearly 1/16"longer neck than its 7mm WSM counterpart. Factory data from Remington shows performance of this cartridge neck in neck with their old standby, the 7mm Remington Magnum. Lyman offers data to duplicate the factory loaded 160-grain Nosler Partition as well as several other premium hunting bullets. Also included is data for the 115-grain Speer HP for those with the urge to take their SAUM varmint hunting. The 120-grain Sierra and 130-grain Speer bullets are best for plinking or coyote-sized game. All powders listed with cast bullet # 287641 gave good ballistic uniformity, particularly SR-4759 and IMR-4198. Overall length with the cast bullet allows the lube grooves and gas check to both remain within the neck of the case. Those shooters loading this cast bullet may want to run the bore-riding nose portion through a .277" diameter H & I die, as this bullet will engage the rifling. Best performance with jacketed bullets came from moderate to slow burning powders such as WXR and MagPro.

**Test Components:**

Cases . . . . . .Remington
Trim-to Length . . . . . .2.025"
Primers . . . . . .Remington 9½ M & 9½ (cast bullets)
Primer Size . . . . . .Large Rifle, Magnum & Standard
Lyman Shell Holder . . . . . .No. 13
Jacketed Bullets Used . . . . .Speer HP #1617, 115 gr.
Sierra SPT #1900, 120 gr.
Speer SP #1623, 130 gr.
Nosler Partition #16325, 140 gr.
Barnes X #28425, 140 gr.
Swift Scirocco, 150 gr.
Nosler Partition #16327, 160 gr.
Barnes XLC #28458, 160 gr.
Sierra HPBT #1930, 168 gr.
Cast Bullets Used . . . . . .(sized to .284" dia)
*gas check bullet *#287641, 160 gr.

**Test Specifications:**
**(Velocity & Pressure)**

Firearm Used . . . . . .Universal Receiver
Barrel Length . . . . . .24"
Twist . . . . . .1-9¼"
Groove Dia. . . . . .284"

**115 gr. Jacketed HP** — 2.590" OAL — **BC:** .257 **SD:** .204

| Powder | Sugg Starting Grains | Velocity fps | Pressure P.S.I. | Max Load Grains | Velocity fps | Pressure P.S.I. |
|---|---|---|---|---|---|---|
| H-414 | 60.0 | 3192 | 51,900 | 63.0 | 3381 | 61,700 |
| IMR-4350 | 61.0 | 3203 | 53,600 | 64.0 | 3415 | 63,600 |
| RX19 | 64.5 | 3208 | 53,900 | 68.0+ | 3401 | 62,700 |
| WXR | 65.5 | 3190 | 53,800 | 69.0+ | 3401 | 64,000 |
| **MAGPRO** | 71.0 | 3315 | 55,200 | **75.0+** | **3449** | **59,800** |

**120 gr. Jacketed SPT** — 2.675" OAL — **BC:** .328 **SD:** .213

| Powder | Sugg Starting Grains | Velocity fps | Pressure P.S.I. | Max Load Grains | Velocity fps | Pressure P.S.I. |
|---|---|---|---|---|---|---|
| H-414 | 59.5 | 3224 | 55,800 | 62.7 | 3381 | 63,100 |
| IMR-4350 | 60.0 | 3153 | 52,700 | 63.5 | 3383 | 63,800 |
| N160 | 62.0 | 3218 | 54,500 | 65.5 | 3393 | 63,400 |
| RX19 | 64.5 | 3201 | 55,000 | 68.0+ | 3382 | 63,600 |
| **WXR** | 65.0 | 3200 | 55,700 | **68.5+** | **3381** | **63,900** |

**Note:** Loads shown in shaded panels are maximum.
Loads shown in bold designate potentially most accurate load.
+ Designates a compressed powder charge.

# 7mm Rem. Short Action Ultra Mag

**130 gr. Jacketed SP** — 2.660" OAL — **BC:** .394 **SD:** .230

| Powder | Sugg Starting Grains | Velocity fps | Pressure P.S.I. | Max Load Grains | Velocity fps | Pressure P.S.I. |
|---|---|---|---|---|---|---|
| H-414 | 58.0 | 3122 | 58,400 | 61.0 | 3249 | 64,200 |
| IMR-4350 | 58.0 | 3057 | 54,300 | 61.0 | 3240 | 63,100 |
| N160 | 59.0 | 3095 | 57,000 | 62.5 | 3226 | 62,000 |
| RX19 | 63.0 | 3094 | 54,600 | 66.0+ | 3289 | 64,100 |
| **WXR** | 62.5 | 3031 | 53,000 | **66.0** | **3234** | **62,800** |

**140 gr. Jacketed SP** — 2.800" OAL — **BC:** .434 **SD:** .248

| Powder | Sugg Starting Grains | Velocity fps | Pressure P.S.I. | Max Load Grains | Velocity fps | Pressure P.S.I. |
|---|---|---|---|---|---|---|
| H-414 | 55.0 | 2993 | 57,500 | 58.0 | 3120 | 63,400 |
| IMR-4350 | 57.0 | 3003 | 56,000 | 60.0 | 3137 | 62,700 |
| XMR-4350 | 58.0 | 3050 | 57,100 | 61.5 | 3184 | 63,500 |
| IMR-4831 | 59.0 | 2979 | 53,600 | 62.5 | 3162 | 61,900 |
| N560 | 60.5 | 3037 | 57,800 | 64.0 | 3170 | 63,900 |
| RX19 | 61.0 | 3000 | 54,400 | 64.5 | 3165 | 62,700 |
| **H4831SC** | 61.0 | 2957 | 56,400 | **64.0** | **3089** | **63,000** |
| WXR | 62.0 | 3007 | 54,600 | 65.5 | 3198 | 64,400 |
| MAGPRO | 67.0 | 3082 | 54,500 | 70.5+ | 3231 | 61,500 |

**140 gr. Barnes X** — 2.755" OAL — **BC:** .436 **SD:** .248

| Powder | Sugg Starting Grains | Velocity fps | Pressure P.S.I. | Max Load Grains | Velocity fps | Pressure P.S.I. |
|---|---|---|---|---|---|---|
| IMR-4350 | 56.5 | 2885 | 56,200 | 59.5 | 3059 | 64,200 |
| XMR-4350 | 57.0 | 2885 | 54,700 | 60.0 | 3054 | 62,700 |
| IMR-4831 | 59.0 | 2922 | 56,300 | 62.0 | 3098 | 64,100 |
| RX19 | 61.0 | 2947 | 56,000 | 64.0+ | 3106 | 63,300 |
| H-4831SC | 61.0 | 2880 | 56,900 | 64.0 | 3019 | 64,000 |
| **WXR** | 61.5 | 2910 | 54,900 | **65.0+** | **3100** | **64,000** |
| MAGPRO | 66.5 | 3034 | 56,000 | 70.0 | 3197 | 64,200 |

**150 gr. Jacketed Scirocco** — 2.825" OAL — **BC:** .515 **SD:** .266

| Powder | Sugg Starting Grains | Velocity fps | Pressure P.S.I. | Max Load Grains | Velocity fps | Pressure P.S.I. |
|---|---|---|---|---|---|---|
| H-414 | 54.0 | 2908 | 57,400 | 57.0 | 3043 | 63,800 |
| IMR-4350 | 54.0 | 2885 | 56,500 | 57.0 | 3024 | 63,800 |
| IMR-4831 | 56.0 | 2874 | 55,200 | 59.0 | 3025 | 63,100 |
| RX19 | 58.0 | 2885 | 55,100 | 61.0 | 3047 | 63,200 |
| H-4831SC | 59.0 | 2875 | 57,700 | 62.0 | 3003 | 64,400 |
| WXR | 59.0 | 2892 | 55,900 | 62.5 | 3053 | 63,800 |
| **MAGPRO** | 65.5 | 2928 | 54,400 | **69.0+** | **3083** | **62,300** |

**160 gr. Jacketed SP** — 2.825" OAL — **BC:** .475 **SD:** .283

| Powder | Sugg Starting Grains | Velocity fps | Pressure P.S.I. | Max Load Grains | Velocity fps | Pressure P.S.I. |
|---|---|---|---|---|---|---|
| IMR-4350 | 52.5 | 2782 | 57,000 | 55.5 | 2908 | 63,100 |
| IMR-4831 | 56.0 | 2858 | 60,700 | 59.0 | 2952 | 64,100 |
| H-4831SC | 56.5 | 2776 | 58,200 | 59.5 | 2884 | 64,000 |
| RX22 | 56.0 | 2902 | 61,000 | 59.0 | 2972 | 63,300 |
| N165 | 58.5 | 2821 | 56,500 | 61.5 | 2940 | 62,400 |
| **WXR** | 59.0 | 2838 | 57,400 | **62.0** | **2970** | **63,900** |
| IMR-7828 | 58.5 | 2826 | 56,100 | 61.5 | 2957 | 62,500 |
| MAGPRO | 62.5 | 2863 | 57,200 | 65.7 | 2966 | 61,000 |
| H-1000 | 63.0 | 2781 | 56,300 | 66.5+ | 2924 | 64,400 |

**160 gr. Barnes XLC** — 2.665" OAL — **BC:** .508 **SD:** .283

| Powder | Sugg Starting Grains | Velocity fps | Pressure P.S.I. | Max Load Grains | Velocity fps | Pressure P.S.I. |
|---|---|---|---|---|---|---|
| IMR-4350 | 55.5 | 2709 | 54,300 | 58.5+ | 2878 | 62,500 |
| IMR-4831 | 58.0 | 2787 | 55,800 | 61.0 | 2925 | 63,700 |
| RX19 | 58.0 | 2787 | 55,700 | 61.5+ | 2902 | 63,000 |
| H-4831SC | 59.0 | 2696 | 56,000 | 62.0+ | 2846 | 63,400 |
| WXR | 61.0 | 2788 | 57,700 | 64.5+ | 2927 | 64,300 |
| IMR-7828 | 61.0 | 2742 | 54,300 | 64.0+ | 2881 | 61,400 |
| **N165** | 62.5 | 2792 | 53,300 | **66.0+** | **2931** | **60,600** |
| H-1000 | 64.5 | 2679 | 52,200 | 68.0+ | 2828 | 59,900 |
| MAGPRO | 67.0 | 2828 | 54,600 | 70.5+ | 2989 | 62,900 |

**168 gr. Jacketed HPBT** — 2.825" OAL — **BC:** .488 **SD:** .298

| Powder | Sugg Starting Grains | Velocity fps | Pressure P.S.I. | Max Load Grains | Velocity fps | Pressure P.S.I. |
|---|---|---|---|---|---|---|
| IMR-4350 | 54.0 | 2775 | 56,400 | 57.0 | 2895 | 62,600 |
| IMR-4831 | 56.0 | 2789 | 56,200 | 59.0 | 2929 | 63,900 |
| RX19 | 56.5 | 2789 | 55,500 | 59.5 | 2936 | 63,800 |
| H-4831SC | 58.0 | 2731 | 56,000 | 61.0 | 2855 | 63,500 |
| **WXR** | 58.0 | 2807 | 57,100 | **61.5** | **2941** | **63,900** |
| RX22 | 58.5 | 2800 | 55,500 | 61.5 | 2949 | 63,900 |
| H-1000 | 63.5 | 2742 | 54,500 | 67.0+ | 2873 | 61,800 |
| MAGPRO | 63.0 | 2821 | 54,700 | 66.5 | 2949 | 61,500 |

***#287641** — 160 gr. (#2 Alloy) 2.740" OAL — **BC:** .382 **SD:** .283

| Powder | Sugg Starting Grains | Velocity fps | Pressure P.S.I. | Max Load Grains | Velocity fps | Pressure P.S.I. |
|---|---|---|---|---|---|---|
| **SR-4759** | 17.5 | 1606 | 23,100 | **26.0** | **2088** | **41,600** |
| XMP-5744 | 19.5 | 1596 | 21,500 | 29.0 | 2118 | 34,700 |
| IMR-4198 | 20.0 | 1626 | 21,200 | 29.0 | 2092 | 33,400 |
| RX7 | 20.5 | 1596 | 20,500 | 30.0 | 2095 | 33,300 |
| N133 | 24.0 | 1615 | 19,900 | 32.5 | 2096 | 31,800 |
| H-4895 | 25.0 | 1609 | 20,400 | 34.5 | 2089 | 29,500 |

**Note:** Loads shown in shaded panels are maximum.
Loads shown in bold designate potentially most accurate load.

+Designates a compressed powder charge.
*Designates the use of Rem. 9 1/2 primers.

# 7mm STW (Shooting Times Westerner)

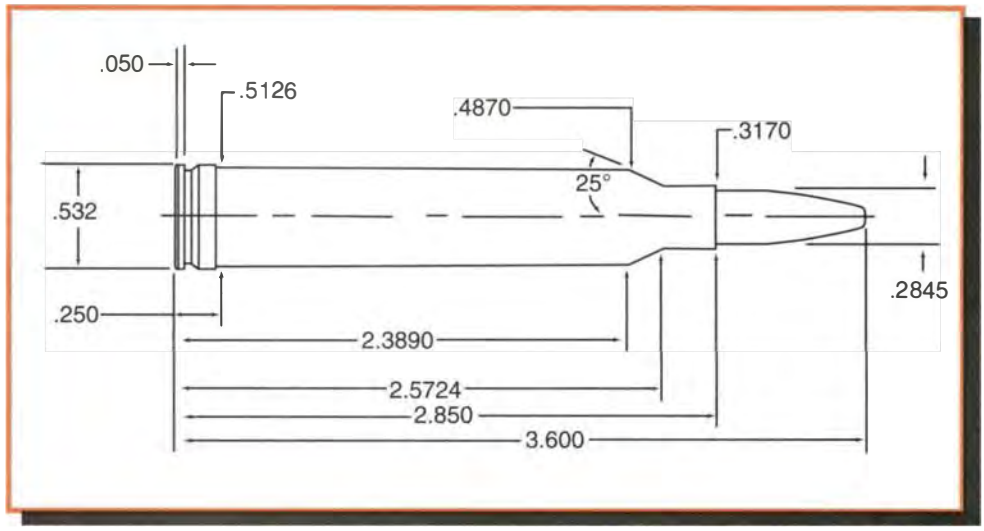


**Comments:**

While many cartridges languish in wildcat status for years before being legitimized as factory offerings, the STW's performance gained early—and widespread—acceptance. Gun writer Layne Simpson developed the STW in 1989 based on a necked down 8mm Remington Magnum. Flat trajectory, hard-hitting power, excellent accuracy, and a wide selection of .284" diameter bullets led to a popularity level never enjoyed by the parent cartridge. Remington standardized the STW in 1997 and other manufacturers including Ruger and Winchester soon followed. This high intensity cartridge offers approximately 200 feet per second over the vaunted 7mm Remington Magnum and 50 to 100 feet over the 7mm Weatherby. One-shot kills out to over four hundred yards and beyond are not unheard of with this cartridge. The STW works best with slower burning powders including, IMR-7828, H-1000, Reloder 22, Reloder 25, and Federal 215 Magnum primers. Shooters loading this cartridge should stick with premium grade hunting bullets designed to withstand the STW's velocity levels. While the pressure test barrel held up reasonably well in our lab, shooters should refrain from shooting long strings to prolong barrel life.

**Test Components:**

Cases . . . . . .Federal
Trim-to Length . . . . . .2.840"
Primers . . . . . .Federal 215
Primer Size . . . . . .Large Rifle Magnum
Lyman Shell Holder . . . . . .No. 13
Jacketed Bullets Used . . . . .Sierra SPT #1900, 120 gr.
Nosler SP #16325, 140 gr.
Combined Tech. Bal. Silvertip #51110, 150 gr.
Combined Tech. Fail Safe #53160, 160 gr.
Speer Grand Slam # 1643, 175 gr.
Cast Bullets Used . . . . . .(sized to .285" dia)
*gas check bullet *#287641, 160 gr.

**Test Specifications: (Velocity & Pressure)**

Firearm Used . . . . . .Universal Receiver
Barrel Length . . . . . .24"
Twist . . . . . .1-9½"
Groove Dia. . . . . .284"

**120 gr. Jacketed SP** — 3.585" OAL — **BC:** .328 **SD:** .213

| Powder | Sugg Starting Grains | Velocity fps | Pressure P.S.I. | Max Load Grains | Velocity fps | Pressure P.S.I. |
|---|---|---|---|---|---|---|
| IMR-4350 | 68.0 | 3208 | 50,300 | 75.8 | 3522 | 63,700 |
| H-4831 | 72.0 | 3180 | 49,800 | 80.0 | 3478 | 63,100 |
| N160 | 73.0 | 3260 | 56,400 | 77.0 | 3423 | 63,400 |
| WXR | 77.5 | 3253 | 53,400 | 82.0 | 3455 | 62,000 |
| RX22 | 75.5 | 3146 | 45,700 | 84.5 | 3536 | 63,100 |
| IMR-7828 | 75.0 | 3123 | 46,700 | 83.0 | 3507 | 63,400 |
| **H-1000** | **79.0** | **3114** | **45,100** | 86.2 | 3498 | 62,600 |
| AA8700 | 85.0 | 2832 | 37,600 | 94.5+ | 3317 | 55,800 |
| H-870 | 88.5 | 3023 | 45,000 | 98.4+ | 3503 | 61,800 |

**140 gr. Jacketed SP** — 3.585" OAL — **BC:** .434 **SD:** .248

| Powder | Sugg Starting Grains | Velocity fps | Pressure P.S.I. | Max Load Grains | Velocity fps | Pressure P.S.I. |
|---|---|---|---|---|---|---|
| H-4831 | 70.5 | 3054 | 54,600 | 78.0 | 3257 | 63,100 |
| WXR | 74.0 | 3123 | 56,100 | 78.0 | 3279 | 62,800 |
| MAGPRO | 75.0 | 3116 | 58,100 | 79.0 | 3209 | 61,000 |
| **RX22** | 74.0 | 3023 | 47,500 | **82.0** | **3382** | **63,700** |
| IMR-7828 | 72.0 | 2981 | 48,100 | 79.3 | 3313 | 63,200 |
| H-1000 | 75.5 | 3074 | 51,700 | 83.0 | 3299 | 63,200 |
| AA 8700 | 82.5 | 2938 | 45,400 | 91.5 | 3330 | 63,200 |
| H-870 | 86.5 | 2959 | 44,100 | 96.0 | 3375 | 63,100 |

**Note:** Loads shown in shaded panels are maximum.
Loads shown in bold designate potentially most accurate load.
\+ Designates a compressed powder charge.

# 7mm STW (Shooting Times Westerner)

**150 gr. Jacketed Silvertip**
3.585" OAL
**BC:** .493
**SD:** .266

| Powder | Sugg Starting Grains | Velocity fps | Pressure P.S.I. | Max Load Grains | Velocity fps | Pressure P.S.I. |
|---|---|---|---|---|---|---|
| **H-4831** | 70.0 | 2853 | 47,700 | **76.0** | **3155** | **62,800** |
| WXR | 73.5 | 2999 | 54,500 | 77.5 | 3191 | 63,100 |
| N165 | 73.5 | 2909 | 54,100 | 77.5 | 3102 | 62,600 |
| MAGPRO | 74.0 | 2986 | 54,700 | 78.0 | 3156 | 62,900 |
| RX22 | 71.0 | 2884 | 45,800 | 79.0 | 3246 | 62,800 |
| IMR-7828 | 70.0 | 2801 | 44,000 | 77.8 | 3192 | 62,600 |
| H-1000 | 74.0 | 2840 | 44,700 | 80.0 | 3212 | 63,600 |
| RX25 | 74.0 | 2844 | 43,500 | 82.0 | 3304 | 63,700 |
| Retumbo | 79.0 | 3047 | 56,600 | 83.5+ | 3209 | 63,200 |
| H50BMG | 85.5 | 2810 | 47,900 | 90.0+ | 2989 | 55,400 |
| AA8700 | 81.0 | 2825 | 43,900 | 90.0 | 3209 | 62,700 |
| H-870 | 86.0 | 2932 | 45,800 | 94.0 | 3290 | 62,400 |

**160 gr. Jacketed Fail Safe**
3.585" OAL
**BC:** .382
**SD:** .283

| Powder | Sugg Starting Grains | Velocity fps | Pressure P.S.I. | Max Load Grains | Velocity fps | Pressure P.S.I. |
|---|---|---|---|---|---|---|
| H-4831 | 69.0 | 2775 | 49,800 | 76.0 | 3054 | 63,200 |
| MAGPRO | 73.0 | 2902 | 57,400 | 77.0 | 3025 | 62,500 |
| Retumbo | 76.0 | 2919 | 54,200 | 80.0 | 3084 | 62,600 |
| **RX22** | 70.0 | 2815 | 47,500 | **77.5** | **3145** | **63,000** |
| IMR-7828 | 69.0 | 2730 | 45,900 | 77.0 | 3076 | 63,400 |
| H-1000 | 73.0 | 2781 | 48,000 | 81.5 | 3088 | 63,100 |
| RX25 | 71.0 | 2778 | 46,000 | 79.0 | 3147 | 63,600 |
| AA8700 | 81.5 | 2778 | 46,200 | 90.5 | 3125 | 62,200 |
| H-870 | 86.0 | 2819 | 46,500 | 92.5 | 3170 | 62,800 |

**175 gr. Jacketed GSSP**
3.585" OAL
**BC:** .465
**SD:** .310

| Powder | Sugg Starting Grains | Velocity fps | Pressure P.S.I. | Max Load Grains | Velocity fps | Pressure P.S.I. |
|---|---|---|---|---|---|---|
| H-4831 | 72.5 | 2751 | 54,900 | 72.5 | 2943 | 63,400 |
| N170 | 70.0 | 2782 | 57,700 | 74.0 | 2902 | 63,200 |
| MAGPRO | 72.0 | 2840 | 59,500 | 76.0 | 2945 | 63,100 |
| **RX22** | **68.0** | **2753** | **49,900** | 75.5 | 3020 | 63,000 |
| IMR-7828 | 67.5 | 2746 | 52,100 | 75.0 | 2985 | 63,700 |
| H-1000 | 69.0 | 2772 | 54,400 | 77.0 | 2954 | 62,800 |
| RX25 | 70.0 | 2763 | 50,900 | 78.0 | 3051 | 63,500 |
| Retumbo | 74.0 | 2840 | 54,800 | 78.0 | 2999 | 62,900 |
| H50BMG | 84.5 | 2858 | 58,300 | 89.0+ | 2987 | 64,100 |
| AA8700 | 81.0 | 2715 | 46,100 | 90.0 | 3064 | 63,200 |
| H-870 | 82.0 | 2722 | 45,200 | 90.0 | 3083 | 63,400 |

**#287641**
160 gr. (#2 Alloy) 3.380" OAL
**BC:** .382
**SD:** .283

| Powder | Sugg Starting Grains | Velocity fps | Pressure P.S.I. | Max Load Grains | Velocity fps | Pressure P.S.I. |
|---|---|---|---|---|---|---|
| SR4759 | 27.0 | 1881 | 25,000 | 35.0 | 2222 | 41,000 |
| **XMP-5744** | **30.0** | **1959** | **22,300** | 42.0 | 2444 | 40,300 |
| IMR-4831 | 50.0 | 2020 | 20,500 | 60.0 | 2397 | 31,100 |

**Note:** Loads shown in shaded panels are maximum.
Loads shown in bold designate potentially most accurate load.
\+ Designates a compressed powder charge.

# 7mm Remington Ultra Mag

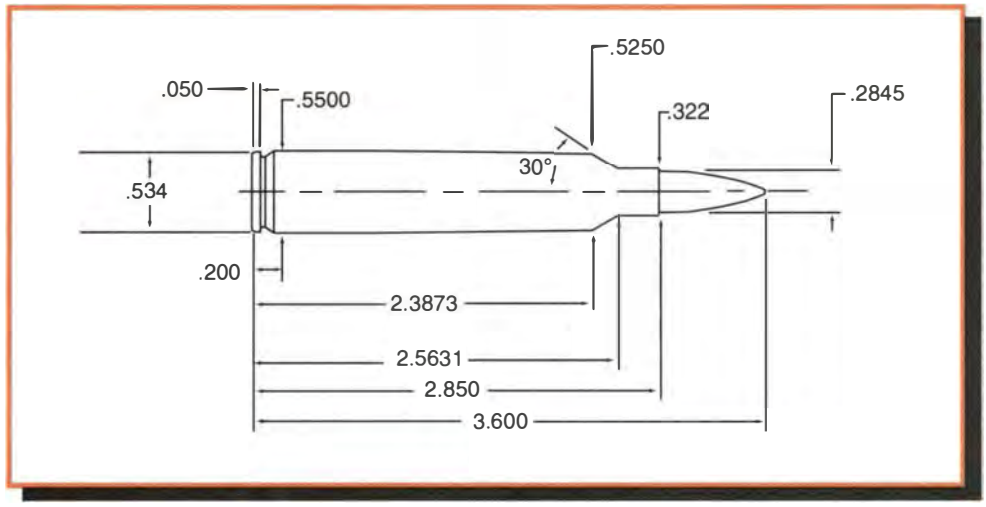


**Comments:**

Remington introduced the 7mm Ultra Mag in 2001 as the smallest caliber in the non-belted Ultra Mag family of cartridges. Advertised by the factory as 20 percent flatter shooting than the 7mm Remington Magnum and approximately 150 feet per second faster than the 7mm STW, the 7mm RUM is about as big as one can get in current 7mm factory rifles. Recent developments in slow burning powders and premium bullets such as the Swift Scirocco bring out the full potential of the 7mm RUM. Perhaps the most highly over-bored of current Magnum rifle cartridges, the 7mm RUM has an insatiable appetite for slow burning powder. Unfortunately, one of them, H-870, has recently been discontinued by Hodgdon. However, Hodgdon's H50BMG produced good results with almost all bullet weights. Initial feedback also reports excellent results with Alliant's Reloder 25. This cartridge has what one would expect in a long-range hunting cartridge; more speed, more down-range energy, more recoil, and more barrel wear. Shooters should take care not to overheat the barrel with sustained firing and not allow excessive fouling to accumulate. Three-shot strings are about maximum before excessive barrel heat necessitates cooling off. The use of a bore guide and a coated cleaning rod should give years of service to the long range hunter who fires only a few shots per season.

**Test Components:**

Cases . . . . . .Remington
Trim-to Length . . . . . .2.840"
Primers . . . . . .Federal 215 Magnum and 210
Primer Size . . . . . .Large Rifle
Lyman Shell Holder . . . . . .No. 13
Jacketed Bullets Used . . . . . .S eer SP #1623, 130 gr.
Nosler Partition #16325, 140 gr.
Swift Scirocco, 150 gr.
Hornady SP #2845, 162 gr.
Cast Bullets Used . . . . . .(sized to .284" dia)
*gas check bullet *#287641, 160 gr.

**Test Specifications:**
**(Velocity & Pressure)**

Firearm Used . . . . . .Universal Receiver
Barrel Length . . . . . .26"
Twist . . . . . .1-9½"
Groove Dia. . . . . .284"

**130 gr. Jacketed SP** — 3.600" OAL — **BC:** .394 **SD:** .230

| Powder | Sugg Starting Grains | Velocity fps | Pressure P.S.I. | Max Load Grains | Velocity fps | Pressure P.S.I. |
|---|---|---|---|---|---|---|
| IMR-4831 | 82.0 | 3355 | 57,200 | 86.5 | 3495 | 62,600 |
| XMR-3100 | 86.0 | 3311 | 54,200 | 90.5 | 3500 | 62,100 |
| H-4831SC | 85.5 | 3303 | 57,100 | 90.0 | 3433 | 62,200 |
| **RX22** | 87.0 | 3365 | 55,600 | **92.0** | **3560** | **63,400** |
| IMR-7828 | 87.0 | 3353 | 55,700 | 92.0 | 3534 | 63,200 |
| H-1000 | 93.0 | 3312 | 56,000 | 98.0 | 3472 | 62,700 |
| RX25 | 90.0 | 3325 | 53,500 | 95.5 | 3556 | 62,300 |
| **H50BMG** | 102.5 | 3270 | 55,100 | **107.0+** | **3429** | **62,500** |
| AA8700 | 104.5 | 3369 | 55,000 | 110.0+ | 3560 | 62,900 |
| H870 | 102.0 | 3164 | 47,700 | 107.5 | 3521 | 58,700 |

**140 gr. Jacketed Partition** — 3.600" OAL — **BC:** .434 **SD:** .248

| Powder | Sugg Starting Grains | Velocity fps | Pressure P.S.I. | Max Load Grains | Velocity fps | Pressure P.S.I. |
|---|---|---|---|---|---|---|
| IMR-4831 | 80.0 | 3273 | 57,500 | 84.0 | 3398 | 62,100 |
| XMR-3100 | 81.0 | 3267 | 55,600 | 85.5 | 3428 | 63,000 |
| H-4831SC | 83.0 | 3249 | 58,200 | 87.5 | 3360 | 63,000 |
| RX22 | 85.0 | 3328 | 56,700 | 89.5 | 3487 | 63,000 |
| IMR-7828 | 84.5 | 3347 | 57,700 | 89.0 | 3509 | 65,000 |
| H-1000 | 90.0 | 3256 | 57,300 | 95.0 | 3408 | 63,000 |
| **RX25** | 88.5 | 3316 | 56,200 | **93.5** | **3493** | **63,400** |
| **H50BMG** | 99.0 | 3228 | 55,300 | **104.5** | **3398** | **63,300** |
| AA8700 | 101.0 | 3253 | 53,300 | 106.0 | 3457 | 61,400 |
| H870 | 100.0 | 3218 | 52,200 | 105.0 | 3492 | 64,100 |

**Note:** Loads shown in shaded panels are maximum.
Loads shown in bold designate potentially most accurate load.
+ Designates a compressed powder charge.

# 7mm Remington Ultra Mag

**150 gr. Jacketed Scirocco** 3.600" OAL — **BC:** .515 **SD:** .266

| Powder | Sugg Starting Grains | Velocity fps | Pressure P.S.I. | Max Load Grains | Velocity fps | Pressure P.S.I. |
|---|---|---|---|---|---|---|
| IMR-4831 | 77.5 | 3144 | 56,000 | 82.0 | 3300 | 63,100 |
| XMR-3100 | 79.0 | 3132 | 53,800 | 84.0 | 3294 | 61,500 |
| H-4831SC | 80.0 | 3126 | 56,300 | 85.0 | 3286 | 63,300 |
| RX22 | 83.0 | 3196 | 55,300 | 87.5 | 3380 | 63,800 |
| IMR-7828 | 82.5 | 3150 | 50,800 | 87.0 | 3349 | 63,000 |
| H1000 | 88.0 | 3063 | 52,300 | 92.5 | 3291 | 62,600 |
| RX25 | 86.5 | 3139 | 52,900 | 91.0 | 3344 | 61,500 |
| **H50BMG** | 99.0 | 3156 | 56,500 | **104.0+** | **3308** | **63,100** |
| AA8700 | 100.0 | 3180 | 53,100 | 105.0 | 3396 | 62,500 |
| H870 | 100.0 | 3159 | 52,500 | 105.5 | 3362 | 61,500 |

**162 gr. Jacketed SP** 3.650" OAL — **BC:** .514 **SD:** .287

| Powder | Sugg Starting Grains | Velocity fps | Pressure P.S.I. | Max Load Grains | Velocity fps | Pressure P.S.I. |
|---|---|---|---|---|---|---|
| IMR-7828 | 80.0 | 2940 | 54,200 | 85.0 | 3146 | 61,500 |
| H1000 | 84.5 | 2763 | 49,800 | 89.0 | 3008 | 59,100 |
| RX25 | 85.0 | 2980 | 55,000 | 89.5 | 3189 | 62,400 |
| H50BMG | 95.0 | 2901 | 54,900 | 100.0 | 3166 | 65,000 |
| **AA8700** | 95.5 | 3014 | 56,400 | **100.5** | **3251** | **65,000** |
| H870 | 97.0 | 3024 | 56,800 | 102.0 | 3223 | 64,300 |

***#287641** 160 gr. (#2 Alloy) 3.620" OAL — **BC:** .382 **SD:** .283

| Powder | Sugg Starting Grains | Velocity fps | Pressure P.S.I. | Max Load Grains | Velocity fps | Pressure P.S.I. |
|---|---|---|---|---|---|---|
| SR-4759 | 24.5 | 1659 | 20,200 | 33.5 | 2111 | 35,200 |
| **XMP-5744** | 26.0 | 1661 | 19,000 | **36.0** | **2101** | **28,800** |
| IMR-4198 | 25.0 | 1670 | 19,400 | 38.0 | 2142 | 30,700 |
| RX7 | 26.0 | 1652 | 18,700 | 38.0 | 2110 | 29,000 |
| Varget | 35.0 | 1756 | 19,500 | 47.0 | 2120 | 26,300 |

**Note:** Loads shown in shaded panels are maximum.
Loads shown in bold designate potentially most accurate load.
* Designates use of 210 primers.
\+ Designates a compressed powder charge.

# 30 M1 Carbine

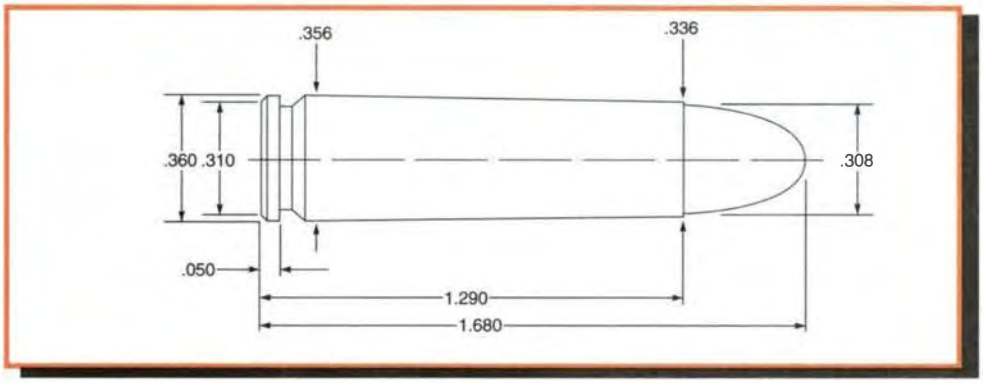


## Comments:

The United States Army developed the M1 Carbine just prior to the outbreak of World War Two. The Carbine was originally intended as a small, lightweight rifle for engineers, mortar crews, and other personnel for whom the M1 Garand would be too unwieldy, but would have been "under-gunned" with the .45 caliber pistol. The M1 Carbine saw widespread use in World War II, and Korea, and was widely distributed throughout t e world via military aid programs in subsequent years. Its first major civilian use occurred during the 1960s through surplus sales. The M1 Carbine's low recoil and ease of handling make it a fun cartridge to shoot and well suited to introducing new shooters to center-fire rifles. Large numbers of M1 Carbines have returned from overseas in recent years, many in rather worn condition.

The 30 Carbine closely resembles a lengthened semiautomatic pistol cartridge. Several manufacturers have in fact chambered pistols for this round over the years. Winchester based the 30 Carbine round on their short-lived 32 SL cartridge. The 30 Carbine has its limits and they should be adhered to. Original specifications call for a 110-grain round nose bullet at just over 1,900 feet per second...not especially impressive for 30-caliber ballistics even 60 years ago. This cartridge has a straight-walled, rimless case which headspaces on the case mouth. Case length should be uniform and should not be trimmed below the "trim-to" length. The internal ballistics of the cartridge and its required overall length limits bullet selection. Most major manufacturers produce bullets designed expressly for the little Carbine. Much like the 22 Hornet, the shape and small capacity of the case requires powders considered slow pistol or fast rifle propellants. VihtaVuori N110 produced good ballistic uniformity in our tests.

## Test Components:

Cases . . . . . .Remington
Trim-to Length . . . . . .1.286"
Primers . . . . . .Remington 6½
Primer Size . . . . . .Small Rifle
Lyman Shell Holder . . . . . .No. 19
Jacketed Bullets Used . . . . .Sierra RN #2100, 110 gr.
Cast Bullets Used . . . . . .(sized to .308" dia)
*gas check bullet *#311359, 115 gr.
#311410, 130 gr.

**110 gr. Jacketed RN** — 1.680" OAL — **BC:** .170 **SD:** .166

| Powder | Sugg Starting Grains | Velocity fps | Pressure C.U.P. | Max Load Grains | Velocity fps | Pressure C.U.P. |
|---|---|---|---|---|---|---|
| SR-4756 | 6.5 | 1355 | 27,000 | 7.3 | 1509 | 38,600 |
| AA#9 | 11.7 | 1805 | 29,900 | 13.0 | 1935 | 38,800 |
| 2400 | 12.0 | 1765 | 28,800 | 13.5+ | 1953 | 36,500 |
| **N110** | **12.5** | **1858** | **29,200** | 13.8 | 2011 | 38,000 |
| H110 | 14.0 | 1935 | 31,600 | 15.5 | 2079 | 38,800 |
| IMR-4227 | 13.5 | 1642 | 28,200 | 15.0+ | 1845 | 39,000 |
| AA-1680 | 15.5 | 1642 | 22,300 | 17.3+ | 1897 | 34,400 |

## Test Specifications: (Velocity & Pressure)

Firearm Used . . . . . .Universal Receiver
Barrel Length . . . . . .20"
Twist . . . . . .1-20"
Groove Dia. . . . . ..308"

**#311359** — 115 gr. (#2 Alloy) 1.635" OAL — **BC:** .181 **SD:** .173

| Powder | Sugg Starting Grains | Velocity fps | Pressure C.U.P. | Max Load Grains | Velocity fps | Pressure C.U.P. |
|---|---|---|---|---|---|---|
| Unique | 5.5 | 1388 | 27,600 | 6.5 | 1555 | 38,600 |
| SR-7625 | 4.6 | 1194 | 22,800 | 5.6 | 1368 | 39,000 |
| SR-4756 | 5.5 | 1298 | 23,400 | 6.5 | 1463 | 38,100 |
| 2400 | 11.0 | 1633 | 31,500 | 12.5+ | 1828 | 40,000 |
| **N110** | **10.0** | **1635** | **31,300** | 11.3 | 1754 | 39,700 |
| IMR-4227 | 11.5 | 1497 | 27,000 | 13.3+ | 1733 | 39,000 |
| AA1680 | 14.0 | 1576 | 29,000 | 15.5 | 1768 | 38,300 |

**#311410** — 130 gr. (#2 Alloy) 1.680" OAL — **BC:** .239 **SD:** .195

| Powder | Sugg Starting Grains | Velocity fps | Pressure C.U.P. | Max Load Grains | Velocity fps | Pressure C.U.P. |
|---|---|---|---|---|---|---|
| Unique | 4.9 | 1260 | 23,400 | 6.1 | 1468 | 35,000 |
| SR-4756 | 5.0 | 1180 | 22,000 | 6.0 | 1371 | 37,300 |
| 2400 | 10.5 | 1564 | 28,800 | 12.0+ | 1733 | 38,600 |
| **N110** | **10.0** | **1659** | **29,700** | 11.2 | 1768 | 38,500 |
| IMR-4227 | 10.6 | 1366 | 24,600 | 12.7+ | 1647 | 38,600 |
| AA1680 | 13.5 | 1563 | 27,900 | 15.0+ | 1735 | 38,100 |

**Note:** Loads shown in shaded panels are maximum.
Loads shown in bold designate potentially most accurate load.
\+ Designates a compressed powder charge.

# 30-30 Winchester (30 WCF) (7.62 x 51R mm)

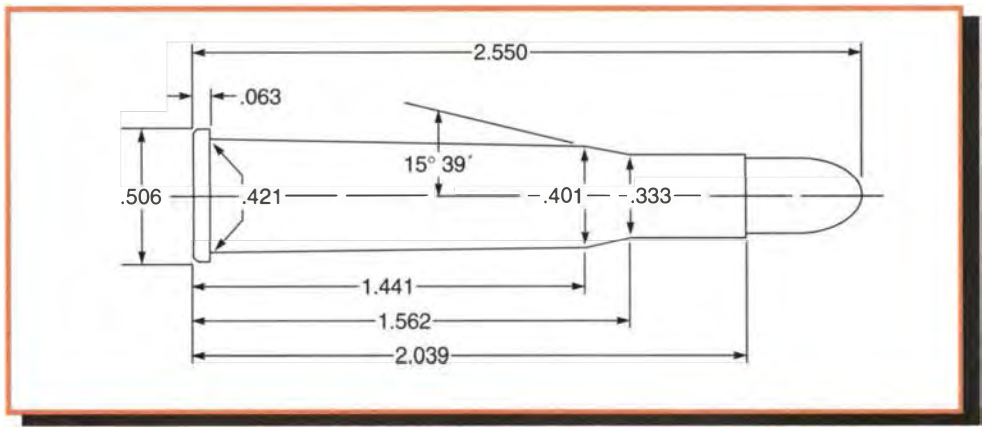


**Comments:**

Winchester introduced the 30 Winchester Center Fire (WCF) cartridge in their new Model 94 lever-action in 1895. The rest is history. Probably no other cartridge in North America has put as much venison on the table as the venerable old "thirty-thirty". Although ballistically unimpressive by today's standards, the lightweight, fast-handling rifles often chambered for the 30-30 proved well suited to hunting the brushy wood lots of the east coast and New England. Even if it had faded into obsolescence, the 30-30 would have earned its place in history as the first sporting cartridge to be loaded exclusively with smokeless powder.

The vast majority of rifles chambered for the 30-30 have tubular magazines. Such rifles require the use of blunt or flat nosed bullets with a cannelure, and should be crimped in place. Loaded cartridges must be kept within the maximum overall length or they will not cycle through the rifle's action. All major bullet manufacturers offer projectiles designed especially for the 30-30. Shooters should trim all cases to uniform length prior to crimping. Many opt to purchase an additional seat body and seat and crimp in two separate operations.

Despite the indelible association with lever action rifles, there have been a few bolt action rifles chambered in 30-30 over the years. Shooters loading for bolt-action rifles or any of the Thompson/Center Contenders should refrain from exceeding maximum loads due to strength limitations of the cartridge case itself. The 30-30 works well with a number of powders including IMR-3031, IMR-4064, and 748. Cast bullet # 311041 was originally designed for the 30-30 and has a good reputation for accuracy. Reloder 7, XMP-5744, and IMR 4198 should work well with any of the listed cast bullets. Best results with cast bullets usually occur between 1,500 and 2,100 feet per second. Shooters loading for Marlin rifles with Micro-Groove® rifling should keep cast bullet velocities below 1,600 feet per second for best accuracy.

**Test Components:**

Cases . . . . . .Winchester
Trim-to Length . . . . . .2.028"
Primers . . . . . .Winchester WLR and CCI 200
Primer Size . . . . . .Large Rifle
Lyman Shell Holder . . . . . .No. 6
Jacketed Bullets Used . . .Hornady RN #3015, 110 gr.
Sierra FP #2020, 125 gr.
Hornady RN #3035, 150 gr.
Hornady FN #3060, 170 gr.
Cast Bullets Used . . . . . .(sized to .308" dia)
*gas check bullet *#311291, 170 gr.
*#311041, 173 gr.

**Test Specifications: (Velocity & Pressure)**

Firearm Used . . . . . .Universal Receiver
Barrel Length . . . . . .24"
Twist . . . . . .1-12"
Groove Dia. . . . . ..308"

**110 gr. Jacketed RN** 2.470" OAL — BC: .150 SD: .166

| Powder | Sugg Starting Grains | Velocity fps | Pressure C.U.P. | Max Load Grains | Velocity fps | Pressure C.U.P. |
|---|---|---|---|---|---|---|
| IMR-4198 | 27.0 | 2358 | 28,200 | 29.5 | 2617 | 38,100 |
| IMR-3031 | 26.5 | 2085 | 28,400 | 33.5 | 2492 | 37,900 |
| IMR-4895 | 31.0 | 2258 | 28,200 | 34.0 | 2545 | 37,700 |
| H-335 | 34.0 | 2278 | 28,000 | 37.8 | 2587 | 37,400 |
| BL-C(2) | 35.0 | 2246 | 26,200 | 38.7 | 2542 | 35,600 |
| 748 | 36.0 | 2280 | 25,600 | 41.0+ | 2631 | 31,400 |
| IMR-4064 | 31.0 | 2168 | 27,000 | 35.0+ | 2568 | 37,300 |
| IMR-4320 | 28.0 | 2044 | 27,700 | 33.0 | 2418 | 37,100 |

**125 gr. Jacketed FN** 2.420" OAL — BC: .153 SD: .188

| Powder | Sugg Starting Grains | Velocity fps | Pressure C.U.P. | Max Load Grains | Velocity fps | Pressure C.U.P. |
|---|---|---|---|---|---|---|
| IMR-4198 | 25.0 | 2171 | 28,000 | 28.0 | 2406 | 35,700 |
| RX7 | 27.0 | 2214 | 27,400 | 30.0 | 2428 | 34,600 |
| IMR-3031 | 29.5 | 2012 | 24,100 | 33.0+ | 2385 | 36,700 |
| AA2230 | 29.0 | 2075 | 25,400 | 32.0 | 2381 | 35,700 |
| IMR-4895 | 30.5 | 2074 | 26,500 | 34.0 | 2331 | 32,800 |
| H335 | 34.0 | 2398 | 32,800 | 37.5 | 2626 | 37,600 |
| BL-C(2) | 34.5 | 2312 | 29,700 | 38.0 | 2543 | 34,000 |
| 748 | 35.0 | 2338 | 29,500 | 39.0+ | 2531 | 30,900 |
| IMR-4064 | 31.5 | 2070 | 27,300 | 35.0+ | 2356 | 34,400 |
| IMR-4320 | 31.5 | 2090 | 27,400 | 35.0 | 2349 | 34,400 |
| 760 | 34.5 | 2056 | 25,200 | 38.5+ | 2265 | 28,700 |
| **RX15** | 32.0 | 2200 | 28,300 | **36.0+** | **2441** | **35,000** |

**Note:** Loads shown in shaded panels are maximum.
Loads shown in bold designate potentially most accurate load.
\+ Designates a compressed powder charge.

# 30-30 Winchester (30 WCF) (7.62 x 51R mm)

**150 gr. Jacketed RN**
2.540" OAL
**BC:** .186
**SD:** .266

| Powder | Sugg Starting Grains | Velocity fps | Pressure C.U.P. | Max Load Grains | Velocity fps | Pressure C.U.P. |
|---|---|---|---|---|---|---|
| IMR-4198 | 20.5 | 1884 | 30,000 | 23.5 | 2092 | 37,600 |
| RX7 | 25.0 | 2154 | 30,500 | 28.0 | 2350 | 38,100 |
| IMR-3031 | 26.5 | 1876 | 25,200 | 28.5 | 2145 | 38,000 |
| AA2230 | 30.0 | 2108 | 27,800 | 31.7 | 2244 | 36,400 |
| IMR-4895 | 26.5 | 1944 | 30,500 | 30.0 | 2145 | 37,400 |
| H-335 | 30.5 | 2151 | 29,600 | 34.0 | 2382 | 38,000 |
| **BL-C(2)** | 33.0 | 2050 | 29,500 | **36.4** | **2292** | **36,000** |
| 748 | 32.0 | 2153 | 31,600 | 36.5 | 2335 | 36,400 |
| IMR-4064 | 29.0 | 2055 | 32,000 | 31.5 | 2199 | 37,800 |
| IMR-4320 | 29.0 | 1956 | 31,000 | 31.5 | 2171 | 37,800 |
| 760 | 34.0 | 2027 | 29,200 | 38.0 | 2244 | 36,300 |
| IMR-4350 | 32.0 | 1980 | 31,000 | 36.0+ | 2218 | 38,100 |

**170 gr. Jacketed FP**
2.540" OAL
**BC:** .189
**SD:** .256

| Powder | Sugg Starting Grains | Velocity fps | Pressure C.U.P. | Max Load Grains | Velocity fps | Pressure C.U.P. |
|---|---|---|---|---|---|---|
| IMR-3031 | 25.0 | 1786 | 27,600 | 28.5 | 2054 | 36,900 |
| IMR-4895 | 24.5 | 1807 | 31,200 | 28.0 | 1973 | 36,800 |
| H-335 | 29.5 | 1913 | 26,700 | 33.0 | 2135 | 35,900 |
| BL-C(2) | 32.0 | 1996 | 29,000 | 35.8 | 2256 | 38,000 |
| 748 | 32.0 | 1961 | 28,800 | 35.6 | 2167 | 35,300 |
| **IMR-4064** | 27.0 | 1845 | 28,200 | **30.5** | **2150** | **38,100** |
| AA-2520 | 29.0 | 1974 | 27,500 | 32.4 | 2170 | 36,000 |
| IMR-4320 | 24.5 | 1708 | 30,200 | 28.0 | 1948 | 37,100 |
| RX15 | 29.0 | 1831 | 27,200 | 32.0+ | 2110 | 37,400 |
| IMR-4350 | 30.0 | 1816 | 28,200 | 34.5+ | 2104 | 38,100 |

**#311291**
170 gr. (#2 Alloy) 2.521" OAL
**BC:** .202
**SD:** .256

| Powder | Sugg Starting Grains | Velocity fps | Pressure C.U.P. | Max Load Grains | Velocity fps | Pressure C.U.P. |
|---|---|---|---|---|---|---|
| Unique | 7.0 | 1211 | 19,800 | 10.6 | 1568 | 36,000 |
| Herco | 9.0 | 1328 | 28,200 | 11.5 | 1538 | 38,100 |
| SR-4756 | 7.0 | 1123 | 19,800 | 10.5 | 1431 | 35,000 |
| 2400 | 15.0 | 1624 | 25,500 | 18.5 | 1853 | 37,500 |
| *SR-4759 | 14.8 | 1530 | 19,900 | 18.5 | 1862 | 36,100 |
| **IMR-4227** | **16.5** | **1575** | **26,500** | 22.0 | 1959 | 35,800 |
| XMP-5744 | 18.0 | 1607 | 28,200 | 24.0 | 2016 | 38,600 |
| IMR-4198 | 18.0 | 1606 | 25,200 | 24.0 | 2013 | 34,800 |
| N130 | 19.0 | 1581 | 23,000 | 24.5 | 2007 | 32,800 |
| *RX7 | 19.0 | 1635 | 20,200 | 28.0 | 2152 | 34,400 |
| *IMR-3031 | 22.5 | 1599 | 18,300 | 28.5 | 2095 | 32,500 |
| *H-335 | 20.3 | 1638 | 18,500 | 32.5 | 2230 | 32,800 |
| *748 | 23.8 | 1604 | 16,900 | 37.3+ | 2355 | 35,100 |

**#311041**
173 gr. (#2 Alloy) 2.510" OAL
**BC:** .220
**SD:** .260

| Powder | Sugg Starting Grains | Velocity fps | Pressure C.U.P. | Max Load Grains | Velocity fps | Pressure C.U.P. |
|---|---|---|---|---|---|---|
| Unique | 7.0 | 1240 | 21,600 | 10.6 | 1555 | 35,500 |
| Herco | 8.5 | 1281 | 25,800 | 11.0 | 1505 | 33,000 |
| SR-4756 | 7.0 | 1102 | 19,800 | 10.5 | 1423 | 36,400 |
| 2400 | 14.5 | 1586 | 27,000 | 19.0 | 1909 | 36,600 |
| *SR-4759 | 15.5 | 1613 | 23,700 | 17.7 | 1803 | 32,600 |
| IMR-4227 | 17.0 | 1615 | 26,100 | 22.0 | 1983 | 34,800 |
| XMP-5744 | 18.0 | 1605 | 26,100 | 24.0 | 2019 | 36,000 |
| **IMR-4198** | **18.0** | **1602** | **23,200** | 23.5 | 1999 | 31,400 |
| N130 | 19.5 | 1608 | 22,800 | 24.3 | 1994 | 29,900 |
| *RX7 | 20.0 | 1632 | 19,800 | 28.6 | 2165 | 34,500 |
| *IMR-3031 | 21.5 | 1555 | 20,100 | 27.0 | 2016 | 31,300 |
| *H-335 | 22.0 | 1596 | 23,200 | 30.0 | 2254 | 33,800 |
| *748 | 25.0 | 1613 | 22,500 | 35.0+ | 2270 | 32,900 |

**Note:** Loads shown in shaded panels are maximum.
Loads shown in bold designate potentially most accurate load.
\+ Designates a compressed powder charge.
* Designates use of CCI 200 primers.

# 300 Savage

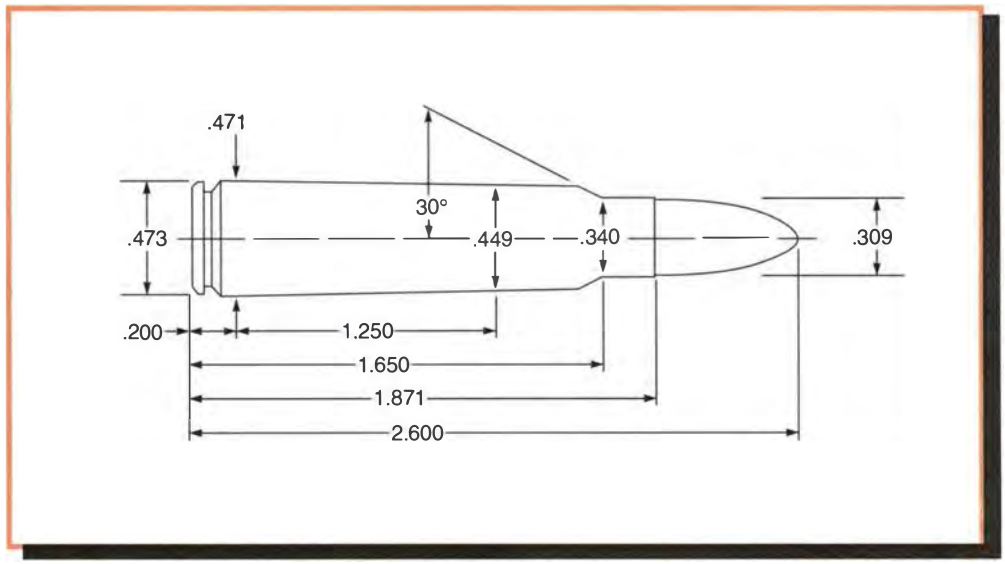


**Comments:**

Savage first offered this caliber in their lever action Model 99 beginning in 1920. It has been chambered in several different firearms over the years. This cartridge remained quite popular until it gradually lost favor to the 308 Winchester. The 300 Savage enjoyed a ballistic advantage over the 30-30 Winchester due to its ability to fire spitzer bullets without the problems normally associated with tubular magazines. The cartridge looks very similar to the 308 Winchester when compared side by side until the shoulder. The Savage has a sharper 30-degree shoulder and shorter (by .082") neck. The 300 Savage is best loaded with flat-based bullets because of this short neck. IMR-4064 and Varget gave best results in our testing while IMR-4320 has also been a longtime favorite. Cast bullets #311359 and #311291 will need to be seated with the gas check well below the neck for proper overall length.

**Test Components:**

Cases . . . . . .Remington
Trim-to Length . . . . . .1.865"
Primers . . . . . .Remington 9½ and Federal 210
Primer Size . . . . . .Large Rifle
Lyman Shell Holder . . . . . .No. 2
Jacketed Bullets Used . . . . . .Sierra HP #2110, 110 gr.
Hornady SP #3020, 130 gr.
Hornady SP #3031, 150 gr.
Sierra RN #2170, 180 gr.
Cast Bullets Used . . . . . .(sized to .309" dia)
*gas check bullet *#311359, 115 gr.
*#311672, 160 gr.
*#311291, 170 gr.

**Test Specifications:**
**(Velocity & Pressure)**

Firearm Used . . . . . .Savage 99 and Universal Receiver
Barrel Length . . . . . .Savage 99 22", Universal Receiver 26"
Twist . . . . . .1-12"
Groove Dia. . . . . Savage 99 .3075", Universal Receiver .309"

**110 gr. Jacketed HP** — 2.425" OAL — **BC:** .188 **SD:** .166

| Powder | Sugg Starting Grains | Velocity fps | Pressure C.U.P. | Max Load Grains | Velocity fps | Pressure C.U.P. |
|---|---|---|---|---|---|---|
| IMR-3031 | 38.0 | 2672 | — | 42.0 | 2967 | — |
| IMR-4895 | 41.0 | 2659 | — | 45.0+ | 2967 | — |
| AA2460 | 39.0 | 2591 | 31,500 | 43.0 | 2897 | 44,400 |
| N135 | 40.5 | 2765 | 34,200 | 45.0+ | 3081 | 42,800 |
| IMR-4064 | 41.0 | 2624 | — | 45.0+ | 2890 | — |
| Varget | 42.5 | 2740 | 34,600 | 46.0+ | 3080 | 44,800 |
| RX15 | 42.5 | 2677 | 34,400 | 47.0+ | 2954 | 43,700 |

**130 gr. Jacketed SP** — 2.565" OAL — **BC:** .295 **SD:** .196

| Powder | Sugg Starting Grains | Velocity fps | Pressure C.U.P. | Max Load Grains | Velocity fps | Pressure C.U.P. |
|---|---|---|---|---|---|---|
| IMR-3031 | 37.0 | 2525 | — | 41.0 | 2808 | — |
| IMR-4895 | 39.0 | 2412 | 34,600 | 43.0 | 2707 | 44,800 |
| AA2460 | 36.5 | 2348 | 33,300 | 40.5 | 2614 | 41,000 |
| 748 | 41.5 | 2514 | 33,300 | 46.0 | 2808 | 44,100 |
| IMR-4064 | 40.0 | 2493 | — | 44.0+ | 2754 | — |
| **Varget** | 40.0 | 2637 | 33,900 | **44.5+** | **2943** | **45,600** |
| N140 | 39.5 | 2476 | 32,400 | 44.0 | 2778 | 45,000 |
| RX15 | 41.0 | 2494 | 33,500 | 45.5+ | 2854 | 45,400 |

**Note:** Loads shown in shaded panels are maximum.
Loads shown in bold designate potentially most accurate load.
+ Designates a compressed powder charge.

# 300 Savage

**150 gr. Jacketed SP**
2.600" OAL
**BC:** .338
**SD:** .226

| Powder | Sugg Starting Grains | Velocity fps | Pressure C.U.P. | Max Load Grains | Velocity fps | Pressure C.U.P. |
|---|---|---|---|---|---|---|
| IMR-3031 | 35.0 | 2271 | 31,700 | 39.0 | 2615 | 45,600 |
| IMR-4895 | 37.0 | 2325 | — | 41.5+ | 2652 | — |
| AA2460 | 35.5 | 2289 | 34,200 | 39.5 | 2521 | 42,200 |
| 748 | 39.0 | 2337 | 28,300 | 43.0 | 2676 | 45,600 |
| IMR-4064 | 38.0 | 2326 | 34,500 | 42.2 | 2609 | 43,300 |
| **Varget** | 38.0 | 2438 | 33,000 | **42.0+** | **2741** | **44,300** |
| N140 | 38.0 | 2326 | 34,000 | 42.0+ | 2612 | 44,900 |
| RX15 | 38.0 | 2371 | 33,900 | 42.5+ | 2657 | 44,400 |

**180 gr. Jacketed RN**
2.560" OAL
**BC:** .280
**SD:** .271

| Powder | Sugg Starting Grains | Velocity fps | Pressure C.U.P. | Max Load Grains | Velocity fps | Pressure C.U.P. |
|---|---|---|---|---|---|---|
| IMR-4895 | 35.0 | 2145 | 32,900 | 39.0 | 2384 | 41,700 |
| AA2460 | 35.0 | 2130 | 32,600 | 38.7 | 2393 | 43,400 |
| 748 | 37.5 | 2181 | 31,900 | 41.7 | 2480 | 45,500 |
| IMR-4064 | 36.0 | 2159 | — | 40.0+ | 2375 | — |
| **Varget** | 37.0 | 2273 | 34,300 | **41.0+** | **2500** | **44,100** |
| IMR-4320 | 37.0 | 2192 | — | 41.0+ | 2439 | — |
| N140 | 35.5 | 2175 | 34,100 | 39.7 | 2388 | 42,400 |
| RX15 | 37.5 | 2258 | 35,700 | 41.5+ | 2498 | 44,500 |

***#311359**
115 gr. (#2 Alloy) 2.280" OAL
**BC:** .181
**SD:** .173

| Powder | Sugg Starting Grains | Velocity fps | Pressure C.U.P. | Max Load Grains | Velocity fps | Pressure C.U.P. |
|---|---|---|---|---|---|---|
| Unique | 9.0 | 1530 | 12,500 | 13.0 | 1960 | 36,400 |
| SR-7625 | 9.5 | 1550 | 28,200 | 12.5 | 1815 | 42,900 |
| SR-4756 | 10.0 | 1555 | 23,400 | 14.0 | 1920 | 41,600 |
| **SR-4759** | **17.0** | **1731** | **14,700** | 24.5 | 2448 | 40,400 |
| XMP-5744 | 21.0 | 1897 | 24,400 | 29.0 | 2445 | 38,500 |
| IMR-4198 | 18.0 | 1513 | 12,500 | 29.0 | 2373 | 32,700 |
| RX7 | 26.0 | 1884 | 16,200 | 33.0 | 2489 | 32,400 |

***#311672**
160 gr. (#2 Alloy) 2.550" OAL
**BC:** .245
**SD:** .239

| Powder | Sugg Starting Grains | Velocity fps | Pressure C.U.P. | Max Load Grains | Velocity fps | Pressure C.U.P. |
|---|---|---|---|---|---|---|
| **SR-4759** | **17.0** | **1655** | **18,100** | 24.0 | 2191 | 44,300 |
| XMP-5744 | 20.0 | 1637 | 19,100 | 31.0 | 2361 | 45,700 |
| IMR-4198 | 21.0 | 1629 | 15,500 | 32.0 | 2441 | 43,700 |
| RX7 | 22.0 | 1617 | 15,200 | 35.0 | 2455 | 42,700 |
| IMR-3031 | 27.0 | 1615 | 14,700 | 37.0 | 2452 | 39,700 |

***#311291**
170 gr. (#2 Alloy) 2.358" OAL
**BC:** .202
**SD:** .256

| Powder | Sugg Starting Grains | Velocity fps | Pressure C.U.P. | Max Load Grains | Velocity fps | Pressure C.U.P. |
|---|---|---|---|---|---|---|
| SR-4759 | 20.0 | 1888 | 28,800 | 22.5 | 2047 | 40,200 |
| **XMP-5744** | **20.0** | **1694** | **26,300** | 27.5 | 2142 | 44,800 |
| IMR-4198 | 20.0 | 1563 | 16,100 | 30.5 | 2279 | 43,700 |
| RX7 | 22.0 | 1812 | 19,300 | 32.5 | 2339 | 39,500 |
| IMR-3031 | 26.5 | 1823 | 18,700 | 35.0 | 2388 | 38,400 |
| 748 | 29.0 | 1817 | 17,000 | 41.5 | 2456 | 36,600 |

**Note:** Loads shown in shaded panels are maximum.
Loads shown in bold designate potentially most accurate load.
* Designates use of Federal 210 primers.
\+ Designates a compressed powder charge.

# 30-40 Krag

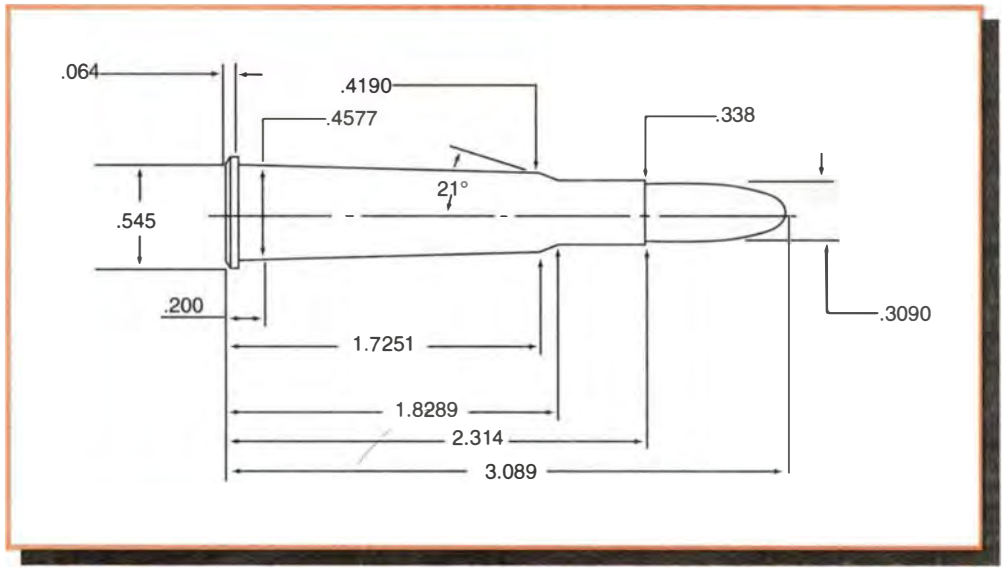


**Comments:**

The 30-40 Krag enjoys the distinction of being the first smokeless rifle cartridge adopted by the United States Army. Technical advances in small arms cartridges came fast and furious in the last fifteen years of the nineteenth century. The Model 92 Krag-Jorgensen rifle chambered in 30-40 became standardized—if not widely issued—in 1892 in response to developments in high-velocity, smokeless cartridges by several European powers. The Krag was originally a Norwegian design chambered in 6.5x55mm and featured an unusual side-loading magazine.

The new American cartridge was loaded with a 220-grain round nose bullet with a muzzle velocity of 2,200 feet per second. Many shooters regard these rifles as the smoothest operating bolt-action rifles ever produced. However, its single locking lug does not qualify it as the strongest action around. SAAMI has established a Maximum Average Pressure (MAP) of 40,000 CUP for this cartridge. Shooters loading for a Krag should have it inspected by a competent gunsmith for cracks in the receiver and bolt. The 30-40 earned an excellent reputation on game as large as elk with the 220-grain bullet despite its modest (on paper anyway) ballistics. The chamber throats of Krag-Jorgensen rifles are configured for this rather long, heavy bullet. Those loading lightweight bullets may have indifferent results. Shooters can also encounter the 30-40 chambering in the Winchester Model 1885, Model 95 and Ruger Number 3.

Like any elderly military rifle, variations in bore sizes of Krag rifles do exist. Fortunately, the Krag-Jorgensen is a great candidate for a cast bullet gun. Shooters will need to slug their bores and size bullets accordingly. Cast bullet #311284 was originally designed for the 30-40 and closely replicates both the weight and profile of the 220-grain jacketed loading. Shooters wishing to load cast bullet #311332 may use the data for bullet #311644 and seat the bullet to an overall length of 3.025". Reloder 7, SR-4759, and XMP-5744 provided the best results in our cast bullet testing

**Test Components:**

Cases . . . . . .Remington
Trim-to Length . . . . . .2.304"
Primers . . . . . .Remington 9½
Primer Size . . . . . .Large Rifle
Lyman Shell Holder . . . . . .No. 7
Jacketed Bullets Used . . . . .Sierra SBT #2125, 150 gr.
Speer SP #2053, 180 gr.
Hornady RN #3090, 220 gr.
Cast Bullets Used . . . . . .(sized to .309" dia)
*gas check bullet *#311359, 115 gr.
*#311672, 160 gr.
*#311291, 170 gr.
*#311041, 173 gr.
*#311644, 190 gr.
*#311284, 210 gr.

**Test Specifications: (Velocity & Pressure)**

Firearm Used . . . . . .Universal Receiver
Barrel Length . . . . . .24"
Twist . . . . . .1-10"
Groove Dia. . . . . .309"

**150 gr. Jacketed SBT**
3.000" OAL
**BC:** .380
**SD:** .226

| Powder | Sugg Starting Grains | Velocity fps | Pressure C.U.P. | Max Load Grains | Velocity fps | Pressure C.U.P. |
|---|---|---|---|---|---|---|
| IMR-3031 | 38.5 | 2339 | 29,000 | 43.0 | 2654 | 39,100 |
| **IMR-4895** | 39.0 | 2265 | 28,000 | **43.5** | **2609** | **37,300** |
| IMR-4064 | 39.5 | 2252 | 29,300 | 44.0 | 2600 | 39,100 |
| Varget | 41.0 | 2488 | 32,900 | 45.0 | 2740 | 39,600 |
| N140 | 41.0 | 2393 | 29,700 | 45.0 | 2672 | 39,000 |
| RX15 | 40.0 | 2376 | 30,200 | 44.5 | 2624 | 38,500 |
| H380 | 43.0 | 2306 | 28,400 | 48.0 | 2584 | 37,900 |
| IMR-4350 | 45.0 | 2316 | 33,900 | 50.5 | 2598 | 39,900 |
| XMR-4350 | 46.0 | 2182 | 30,000 | 51.0+ | 2548 | 39,900 |

**Note:** Loads shown in shaded panels are maximum. Loads shown in bold designate potentially most accurate load.
+ Designates a compressed powder charge.

# 30-40 Krag

**180 gr. Jacketed SP** — 3.080" OAL — **BC:** .483 **SD:** .271

| Powder | Sugg Starting Grains | Velocity fps | Pressure C.U.P. | Max Load Grains | Velocity fps | Pressure C.U.P. |
|---|---|---|---|---|---|---|
| IMR-3031 | 36.0 | 2151 | 31,300 | 40.0 | 2408 | 38,700 |
| IMR-4895 | 38.0 | 2172 | 30,800 | 42.0 | 2432 | 39,900 |
| IMR-4064 | 38.0 | 2148 | 29,700 | 42.0 | 2389 | 39,300 |
| **Varget** | **36.0** | **2077** | **28,900** | 40.0 | 2341 | 38,900 |
| RX15 | 37.0 | 2167 | 30,100 | 41.5 | 2386 | 38,400 |
| N150 | 38.0 | 2181 | 33,200 | 42.0 | 2389 | 39,400 |
| H380 | 42.0 | 2164 | 31,000 | 46.0 | 2402 | 39,700 |
| IMR-4350 | 42.0 | 2031 | 29,700 | 46.0 | 2293 | 38,800 |
| XMR-4350 | 41.5 | 1921 | 28,400 | 46.0 | 2247 | 38,600 |

**#311359** — 115 gr. (#2 Alloy) 2.725" OAL — **BC:** .181 **SD:** .172

| Powder | Sugg Starting Grains | Velocity fps | Pressure C.U.P. | Max Load Grains | Velocity fps | Pressure C.U.P. |
|---|---|---|---|---|---|---|
| **AA#9** | **14.5** | **1666** | — | 19.0 | 2049 | — |
| 2400 | 14.0 | 1622 | — | 18.5 | 1989 | — |
| SR-4759 | 15.0 | 1613 | — | 20.0 | 2049 | — |
| IMR-4227 | 17.0 | 1630 | — | 22.0 | 2028 | — |
| XMP-5744 | 19.0 | 1708 | — | 25.0 | 2102 | — |
| IMR-4198 | 19.0 | 1691 | — | 25.0 | 2112 | — |

**#311291** — 170 gr. (#2 Alloy) 2.825" OAL — **BC:** .202 **SD:** .256

| Powder | Sugg Starting Grains | Velocity fps | Pressure C.U.P. | Max Load Grains | Velocity fps | Pressure C.U.P. |
|---|---|---|---|---|---|---|
| AA#9 | 16.0 | 1619 | — | 22.0 | 1991 | — |
| 2400 | 16.0 | 1610 | — | 23.0 | 2038 | — |
| SR-4759 | 17.0 | 1620 | — | 23.5 | 2022 | — |
| **IMR-4227** | 17.5 | 1549 | — | **24.0** | **1961** | — |
| XMP-5744 | 20.0 | 1638 | — | 26.5 | 2020 | — |
| IMR-4198 | 20.0 | 1648 | — | 27.0 | 2043 | — |
| RX7 | 20.0 | 1599 | — | 27.5 | 2044 | — |
| N135 | 24.0 | 1578 | — | 31.5 | 2010 | — |
| Varget | 27.0 | 1693 | — | 34.0 | 2059 | — |

**#311644** — 190 gr. (#2 Alloy) 2.925" OAL — **BC:** .272 **SD:** .286

| Powder | Sugg Starting Grains | Velocity fps | Pressure C.U.P. | Max Load Grains | Velocity fps | Pressure C.U.P. |
|---|---|---|---|---|---|---|
| SR-4759 | 16.0 | 1489 | — | 24.0 | 1997 | — |
| IMR-4227 | 17.0 | 1481 | — | 25.0 | 1967 | — |
| AA-1680 | 19.0 | 1475 | — | 26.5 | 1927 | — |
| XMP-5744 | 19.0 | 1547 | — | 27.0 | 2015 | — |
| IMR-4198 | 19.0 | 1516 | — | 27.5 | 2023 | — |
| **RX7** | **19.5** | **1522** | — | 28.5 | 2062 | — |
| N135 | 24.0 | 1504 | — | 32.5 | 2043 | — |
| Varget | 25.0 | 1514 | — | 35.0 | 2065 | — |

**220 gr. Jacketed RN** — 3.080" OAL — **BC:** .300 **SD:** .331

| Powder | Sugg Starting Grains | Velocity fps | Pressure C.U.P. | Max Load Grains | Velocity fps | Pressure C.U.P. |
|---|---|---|---|---|---|---|
| IMR-4895 | 35.0 | 1896 | 30,700 | 38.5 | 2132 | 39,500 |
| IMR-4064 | 35.5 | 1910 | 31,100 | 39.5 | 2120 | 39,000 |
| N150 | 34.0 | 1877 | 33,500 | 37.0 | 2055 | 39,000 |
| IMR-4350 | 40.0 | 1874 | 29,500 | 45.0 | 2177 | 39,200 |
| XMR-3100 | 41.0 | 1728 | 29,400 | 45.5 | 2042 | 38,700 |
| **RX19** | 42.0 | 1937 | 30,000 | **46.5** | **2204** | **38,500** |
| H-4831SC | 44.0 | 2109 | 36,600 | 48.5 | 2169 | 39,700 |

**#311672** — 160 gr. (#2 Alloy) 2.900" OAL — **BC:** .245 **SD:** .239

| Powder | Sugg Starting Grains | Velocity fps | Pressure C.U.P. | Max Load Grains | Velocity fps | Pressure C.U.P. |
|---|---|---|---|---|---|---|
| AA#9 | 15.0 | 1571 | — | 21.0 | 1975 | — |
| 2400 | 15.0 | 1561 | — | 20.5 | 1936 | — |
| SR-4759 | 15.0 | 1493 | — | 23.5 | 2052 | — |
| IMR-4227 | 17.0 | 1494 | — | 25.0 | 2020 | — |
| XMP-5744 | 18.0 | 1513 | — | 27.0 | 2039 | — |
| IMR-4198 | 18.0 | 1519 | — | 27.0 | 2048 | — |
| **RX7** | 20.0 | 1608 | — | **26.0** | **1992** | — |
| N135 | 24.0 | 1528 | — | 32.0 | 2035 | — |
| Varget | 25.0 | 1540 | — | 35.0 | 2067 | — |

**#311041** — 173 gr. (#2 Alloy) 2.835" OAL — **BC:** .220 **SD:** .258

| Powder | Sugg Starting Grains | Velocity fps | Pressure C.U.P. | Max Load Grains | Velocity fps | Pressure C.U.P. |
|---|---|---|---|---|---|---|
| AA#9 | 15.5 | 1579 | — | 21.5 | 1993 | — |
| 2400 | 15.5 | 1563 | — | 21.5 | 1942 | — |
| **SR-4759** | 16.0 | 1562 | — | **23.5** | **2051** | — |
| IMR-4227 | 17.5 | 1541 | — | 23.0 | 1914 | — |
| XMP-5744 | 19.0 | 1590 | — | 26.5 | 2035 | — |
| IMR-4198 | 19.0 | 1566 | — | 27.0 | 2054 | — |
| RX7 | 20.5 | 1613 | — | 27.0 | 2034 | — |
| N135 | 24.0 | 1547 | — | 32.0 | 2024 | — |
| Varget | 27.5 | 1644 | — | 34.0 | 2026 | — |

**#311284** — 210 gr. (#2 Alloy) 3.025" OAL — **BC:** .332 **SD:** .314

| Powder | Sugg Starting Grains | Velocity fps | Pressure C.U.P. | Max Load Grains | Velocity fps | Pressure C.U.P. |
|---|---|---|---|---|---|---|
| SR-4759 | 15.5 | 1426 | — | 24.5 | 1945 | — |
| IMR-4227 | 16.5 | 1405 | — | 22.0 | 1731 | — |
| AA-1680 | 19.0 | 1425 | — | 25.0 | 1810 | — |
| **XMP-5744** | 18.0 | 1429 | — | **28.0** | **1995** | — |
| IMR-4198 | 18.0 | 1441 | — | 28.0 | 1978 | — |
| RX7 | 18.5 | 1437 | — | 29.0 | 2015 | — |
| N135 | 23.0 | 1442 | — | 33.0 | 2000 | — |
| Varget | 25.0 | 1515 | — | 35.0 | 2046 | — |

**Note:** Loads shown in shaded panels are maximum.
Loads shown in bold designate potentially most accurate load.

# 308 Winchester (7.62 x 51mm) (7.62 NATO)

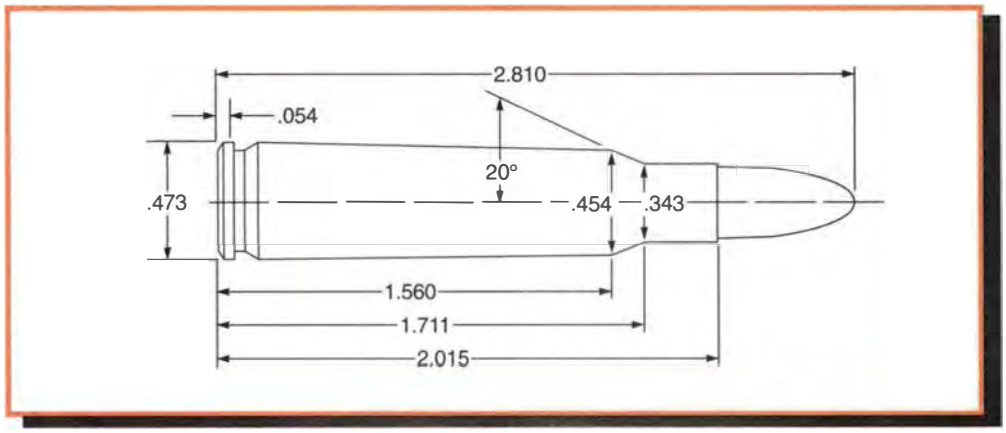


**Comments:**

The 308 Winchester/7.62 NATO is one of the most versatile and popular center-fire rifle cartridges ever made. It is the end result of the U.S. military's experiment with shortened 30-06 cartridges during the late 1940s. It will do much of what the 30-06 will do with bullets up to 180-grains. Winchester introduced the 308 as the civilian counterpart to the 7.62 NATO in 1952, several years before its adoption by the U.S. military. It works well with a wide range of powders although those in the medium range such as IMR-4895, IMR-4064, Varget, N140, and Reloder 15 usually give best results with most common bullets weights. The 308 has been chambered in every conceivable type of rifle as well as the T/C Encore pistol. It has spawned a family of standard cartridges and wildcats too numerous to list. The cartridge enjoys a high level of inherent accuracy and its 2.810" overall length functions in short actions.

The 308 has proven effective for both hunting and competitive shooting. 110, 125, and 130-grain bullets should be relegated to varmints and smaller game. The 150, 165, and 180-grain bullets are suitable for whitetails on up to elk with proper shot placement. The 308 loaded with the 168-grain Sierra MatchKing has been a standard match load in High Power Rifle competition for many years. Sierra's newer 175-grain MatchKing is suitable for the same situations but offers a higher ballistic coefficient. Sierra's 190-grain MatchKing will shoot accurately out to 1,000 yards. Many shooters loading for M1A/M14 rifles find best results with IMR-4895 or IMR-4064. Shooters reloading military cases will need to remove the primer crimp in order to re-prime cartridge cases. Shooters should also stay one to two grains below the listed maximum charges due to the smaller volume of GI brass.

The 308 Winchester also works well with cast bullets. Best accuracy will usually occur in the velocity ranges of 1,600 to 2,000 feet per second. Cast bullet #311672, #311644, and #311299 have proven popular with metallic silhouette shooters. Reloder 7 and SR-4759 will often give best results with cast bullets.

**Test Components:**

Cases . . . . . .Remington
Trim-to Length . . . . . .2.005"
Primers . . . . . .Remington 9½
Primer Size . . . . . .Large Rifle
Lyman Shell Holder . . . . . .No. 2
Jacketed Bullets Used . . . . . .Sierra HP #2110, 110 gr.
Sierra SP #2120, 125 gr.
Hornady SP #3020, 130 gr.
Hornady SP #3031, 150 gr.
Nosler J4 Match #53155, 155 gr.
Nosler Partition #16330, 165 gr.
Sierra HPBT #2200, 168 gr.
Sierra HPBT #2275, 175 gr.
Hornady A-Max #30712, 178 gr.
Nosler Ballistic Tip #30180, 180 gr.
Sierra HPBT #2210, 190 gr.
Sierra HPBT #2230, 200 gr.
Cast Bullets Used . . . . . .(sized to .308" dia)
*gas check bullet *#311359, 115 gr.
*#311672, 160 gr.
*#311291, 170 gr.
*#311041, 173 gr.
*#311332, 180 gr.
*#311644, 190 gr.
*#311299, 200 gr.

**Test Specifications:**
**(Velocity & Pressure)**

Firearm Used . . . . . .Universal Receiver
Barrel Length . . . . . .24"
Twist . . . . . .1-10"
Groove Dia. . . . . ..308"

**110 gr. Jacketed HP** **BC:** .177 **SD:** .166
2.603" OAL

| Powder | Sugg Starting Grains | Velocity fps | Pressure C.U.P. | Max Load Grains | Velocity fps | Pressure C.U.P. |
|---|---|---|---|---|---|---|
| RX7 | 37.5 | 2898 | 36,900 | 42.0 | 3194 | 49,200 |
| IMR-3031 | 39.6 | 2604 | 30,300 | 45.0+ | 3017 | 42,200 |
| 748 | 44.0 | 2656 | 27,200 | 50.0+ | 3023 | 36,200 |
| H-335 | 42.0 | 2823 | 31,400 | 49.0 | 3282 | 49,400 |
| BL-C(2) | 44.9 | 2765 | 31,000 | 51.0+ | 3115 | 42,000 |
| IMR-4064 | 45.0 | 2849 | 36,900 | 50.0+ | 3184 | 49,200 |
| IMR-4895 | 44.0 | 2890 | 39,000 | 50.0+ | 3225 | 51,600 |
| IMR-4320 | 44.0 | 2702 | 34,500 | 51.5+ | 3154 | 51,600 |
| H-380 | 49.0 | 2994 | 41,600 | 55.5+ | 3268 | 50,800 |

**Note:** Loads shown in shaded panels are maximum. Loads shown in bold designate potentially most accurate load.
+ Designates a compressed powder charge.

# 308 Winchester (7.62 x 51mm) (7.62 NATO)

### 125 gr. Jacketed SP
2.622" OAL

BC: .279
SD: .188

| Powder | Sugg Starting Grains | Velocity fps | Pressure C.U.P. | Max Load Grains | Velocity fps | Pressure C.U.P. |
|---|---|---|---|---|---|---|
| RX7 | 35.0 | 2624 | 31,000 | 40.2 | 3021 | 51,200 |
| IMR-3031 | 38.7 | 2656 | 41,200 | 44.0+ | 2996 | 52,100 |
| **748** | 45.4 | 2687 | 29,500 | **51.2+** | **3034** | **41,600** |
| H-335 | 41.0 | 2685 | 31,600 | 47.0 | 3108 | 49,400 |
| BL-C(2) | 45.0 | 2793 | 36,400 | 50.0 | 3086 | 50,000 |
| IMR-4064 | 42.5 | 2702 | 36,300 | 48.0+ | 3017 | 50,500 |
| IMR-4895 | 43.0 | 2747 | 38,600 | 47.0 | 3003 | 49,600 |
| IMR-4320 | 45.0 | 2724 | 38,600 | 49.5+ | 2994 | 51,200 |
| H-380 | 48.0 | 2890 | 42,400 | 54.0+ | 3115 | 49,600 |

### 150 gr. Jacketed SP
2.735" OAL

BC: .338
SD: .226

| Powder | Sugg Starting Grains | Velocity fps | Pressure | Max Load Grains | Velocity fps | Pressure |
|---|---|---|---|---|---|---|
| XMR-2015 | 38.0 | 2588 | 39,300 | 42.0 | 2846 | 49,800 C |
| IMR-3031 | 40.0 | 2544 | 36,000 | 43.5+ | 2942 | 49,100 C |
| AA 230 | 40.5 | 2538 | 39,300 | 44.5 | 2803 | 51,100 C |
| IMR-4895 | 40.0 | 2403 | 32,000 | 45.0 | 2777 | 50,000 C |
| H-335 | 38.0 | 2457 | 32,300 | 45.0 | 2923 | 52,000 C |
| BL-C(2) | 45.0 | 2717 | 40,700 | 49.0 | 2915 | 52,400 C |
| AA2460 | 40.0 | 2533 | 40,500 | 44.5 | 2786 | 51,800 C |
| 748 | 44.0 | 2690 | 32,700 | 50.0+ | 2996 | 43,200 C |
| IMR-4064 | 43.0 | 2645 | 41,100 | 48.0+ | 2890 | 52,000 C |
| Varget | 42.5 | 2632 | 42,200 | 47.0 | 2891 | 58,000 P |
| IMR-4320 | 42.5 | 2544 | 41,200 | 47.0 | 2874 | 59,900 P |
| N140 | 41.5 | 2487 | 39,400 | 46.2 | 2795 | 56,700 P |
| RX15 | 41.0 | 2521 | 36,300 | 46.2 | 2847 | 50,000 C |
| **H-380** | **48.0** | **2607** | **38,700** | 52.0+ | 2787 | 45,200 P |

### 165 gr. Jacketed Partition
2.780" OAL

BC: .410
SD: .248

| Powder | Sugg Starting Grains | Velocity fps | Pressure | Max Load Grains | Velocity fps | Pressure |
|---|---|---|---|---|---|---|
| IMR-3031 | 37.0 | 2331 | 35,000 | 42.0 | 2652 | 49,600 C |
| H-335 | 36.0 | 2334 | 32,300 | 42.0 | 2674 | 47,000 C |
| IMR-4895 | 38.0 | 2426 | 39,300 | 43.2 | 2704 | 51,800 C |
| BL-C(2) | 41.0 | 2398 | 35,000 | 46.0 | 2732 | 52,000 C |
| AA-2460 | 39.0 | 2377 | 38,700 | 44.0 | 2645 | 50,600 C |
| 748 | 42.0 | 2449 | 33,800 | 47.5 | 2756 | 49,800 C |
| IMR-4064 | 39.0 | 2406 | 35,300 | 44.5+ | 2698 | 50,300 C |
| Varget | 41.0 | 2502 | 43,900 | 46.0+ | 2756 | 59,800 P |
| AA2520 | 40.0 | 2466 | 39,800 | 46.0 | 2724 | 51,200 C |
| IMR-4320 | 42.0 | 2463 | 42,400 | 45.0 | 2632 | 51,200 C |
| RX15 | 41.0 | 2424 | 34,800 | 44.5 | 2684 | 47,900 C |
| H-380 | 45.5 | 2441 | 38,800 | 50.5+ | 2641 | 45,900 P |
| **N150** | **42.0** | **2512** | **45,400** | 47.0 | 2745 | 59,400 P |
| 760 | 45.0 | 2328 | 31,800 | 51.5+ | 2646 | 43,500 C |
| IMR-4350 | 45.5 | 2360 | 40,400 | 50.5+ | 2637 | 53,100 P |

### 130 gr. Jacketed SP
2.690" OAL

BC: .295
SD: .196

| Powder | Sugg Starting Grains | Velocity fps | Pressure | Max Load Grains | Velocity fps | Pressure |
|---|---|---|---|---|---|---|
| XMR-2015 | 41.0 | 2830 | 38,800 | 45.0 | 3123 | 51,200 C |
| IMR-3031 | 40.0 | 2755 | 39,600 | 45.0+ | 3085 | 57,100 P |
| Benchmark | 41.5 | 2743 | 41,400 | 46.0 | 3077 | 60,500 P |
| AA 2230 | 41.5 | 2665 | 35,400 | 47.5 | 3056 | 51,600 C |
| IMR-4895 | 43.0 | 2754 | 40,700 | 47.0 | 2958 | 50,000 C |
| H-335 | 41.0 | 2664 | 33,400 | 47.0 | 3085 | 48,800 C |
| BL-C(2) | 45.0 | 2770 | 36,400 | 50.0 | 3058 | 50,800 C |
| 748 | 44.0 | 2645 | 30,200 | 50.6+ | 2992 | 44,200 C |
| **N135** | 42.0 | 2813 | 43,100 | **46.7+** | **3096** | **59,800 P** |
| IMR-4064 | 44.0 | 2770 | 39,000 | 47.0+ | 2983 | 49,000 C |
| Varget | 46.0 | 2892 | 44,600 | 50.0+ | 3174 | 59,900 P |
| IMR-4320 | 45.0 | 2702 | 37,300 | 49.5 | 2941 | 50,000C |
| H-380 | 48.0 | 2873 | 43,300 | 54.0+ | 3125 | 50,400C |

### 155 gr. Jacketed J4
2.800" OAL

BC: .450
SD: .233

| Powder | Sugg Starting Grains | Velocity fps | Pressure P.S.I. | Max Load Grains | Velocity fps | Pressure P.S.I. |
|---|---|---|---|---|---|---|
| **Benchmark** | 39.5 | 2577 | 42,800 | **44.0** | **2861** | **61,100** |
| IMR-4895 | 42.0 | 2636 | 43,600 | 46.0+ | 2914 | 59,000 |
| 748 | 43.0 | 2546 | 34,700 | 48.0 | 2910 | 57,700 |
| N135 | 39.5 | 2574 | 41,800 | 44.0 | 2845 | 59,700 |
| IMR-4064 | 41.0 | 2566 | 39,600 | 46.0+ | 2885 | 56,700 |
| Varget | 43.0 | 2601 | 40,700 | 48.0+ | 2905 | 58,300 |
| AA2520 | 41.0 | 2551 | 35,600 | 45.7 | 2924 | 56,700 |
| N140 | 39.5 | 2566 | 40,800 | 44.0 | 2843 | 59,200 |
| N540 | 43.0 | 2590 | 39,600 | 48.0+ | 2923 | 58,200 |

### 168 gr. Jacketed HPBT
2.775" OAL

BC: .462
SD: .253

| Powder | Sugg Starting Grains | Velocity fps | Pressure | Max Load Grains | Velocity fps | Pressure |
|---|---|---|---|---|---|---|
| IMR-3031 | 37.0 | 2336 | 35,000 | 42.0 | 2645 | 49,600 C |
| Benchmark | 37.0 | 2381 | 41,200 | 41.0 | 2639 | 56,300 P |
| IMR-4895 | 38.0 | 2331 | 35,500 | 42.5 | 2624 | 51,200 C |
| BL-C(2) | 41.0 | 2444 | 37,700 | 45.0 | 2695 | 48,800 C |
| AA2460 | 38.0 | 2336 | 36,900 | 42.0 | 2608 | 51,000 C |
| 748 | 40.0 | 2371 | 32,800 | 45.7+ | 2714 | 50,200 C |
| IMR-4064 | 40.0 | 2415 | 35,500 | 45.0+ | 2717 | 52,000 C |
| Varget | 41.0 | 2491 | 42,200 | 45.7+ | 2766 | 61,100 P |
| AA2520 | 40.5 | 2511 | 46,800 | 45.0 | 2732 | 60,800 P |
| IMR-4320 | 42.0 | 2475 | 40,700 | 45.0 | 2659 | 50,800 C |
| N140 | 39.0 | 2339 | 39,000 | 43.5 | 2638 | 57,200 P |
| RX15 | 40.0 | 2411 | 41,000 | 44.8 | 2724 | 61,200 P |
| N150 | 41.0 | 2438 | 41,900 | 45.5 | 2690 | 57,300 P |
| **N550** | **44.5** | **2524** | **43,300** | 48.5+ | 2819 | 59,300 P |
| IMR-4350 | 45.0 | 2339 | 38,600 | 50.0+ | 2666 | 55,100 P |

**Note:** Loads shown in shaded panels are maximum.
Loads shown in bold designate potentially most accurate load.
\+ Designates a compressed powder charge.
In pressure column, C=Copper Units of Pressure (CUP); P=Pounds per Square Inch (PSI)

# 308 Winchester (7.62 x 51mm) (7.62 NATO)

**175 gr. Jacketed HPBT** — 2.800" OAL — **BC:** .505 **SD:** .264

| Powder | Sugg Starting Grains | Velocity fps | Pressure P.S.I. | Max Load Grains | Velocity fps | Pressure P.S.I. |
|---|---|---|---|---|---|---|
| IMR-4895 | 39.0 | 2429 | 43,100 | 43.5 | 2692 | 59,400 |
| 748 | 40.5 | 2360 | 35,700 | 45.0 | 2701 | 56,600 |
| IMR-4064 | 39.5 | 2370 | 38,600 | 44.0 | 2688 | 58,000 |
| Varget | 40.0 | 2459 | 43,900 | 45.2+ | 2708 | 59,300 |
| AA2520 | 38.5 | 2375 | 37,900 | 43.0 | 2673 | 55,100 |
| IMR-4320 | 39.0 | 2370 | 41,600 | 43.5 | 2659 | 59,800 |
| N140 | 39.0 | 2370 | 40,800 | 43.5 | 2651 | 58,700 |
| RX15 | 40.0 | 2428 | 41,500 | 44.3 | 2697 | 58,600 |
| N150 | 41.0 | 2430 | 41,900 | 45.5 | 2701 | 59,900 |
| **N550** | **43.5** | **2405** | **38,700** | 48.5+ | 2753 | 58,900 |

**180 gr. Jacketed Ballistic Tip** — 2.800" OAL — **BC:** .507 **SD:** .271

| Powder | Sugg Starting Grains | Velocity fps | Pressure P.S.I. | Max Load Grains | Velocity fps | Pressure P.S.I. |
|---|---|---|---|---|---|---|
| **IMR-4895** | 38.0 | 2320 | 45,400 | **42.5** | **2550** | **58,500** |
| IMR-4064 | 38.5 | 2298 | 44,700 | 43.0 | 2550 | 57,500 |
| Varget | 39.0 | 2273 | 44,800 | 43.5 | 2521 | 56,500 |
| AA2520 | 38.0 | 2192 | 37,400 | 42.2 | 2549 | 58,100 |
| IMR-4320 | 38.0 | 2234 | 42,900 | 42.0 | 2505 | 58,400 |
| N140 | 38.0 | 2204 | 40,900 | 42.0 | 2503 | 58,800 |
| RX15 | 39.0 | 2278 | 41,900 | 43.5 | 2548 | 57,800 |
| N540 | 39.5 | 2276 | 41,300 | 44.0 | 2578 | 58,500 |
| **N150** | 39.5 | 2289 | 42,600 | **43.7** | **2524** | **57,900** |
| 760 | 43.0 | 2345 | 44,600 | 48.0+ | 2549 | 54,700 |

**200 gr. Jacketed HPBT** — 2.780" OAL — **BC:** .565 **SD:** .301

| Powder | Sugg Starting Grains | Velocity fps | Pressure | Max Load Grains | Velocity fps | Pressure |
|---|---|---|---|---|---|---|
| IMR-4895 | 37.0 | 2150 | 36,900 | 40.5 | 2392 | 51,600 C |
| IMR-4064 | 38.5 | 2290 | 46,400 | 43.0 | 2521 | 60,400 P |
| Varget | 38.0 | 2291 | 46,600 | 42.5 | 2503 | 60,200 P |
| AA2520 | 34.5 | 2105 | 36,300 | 40.5 | 2396 | 51,200 C |
| IMR-4320 | 39.0 | 2178 | 37,300 | 42.5 | 2409 | 52,400 C |
| **N140** | **37.5** | **2218** | **44,800** | 42.0 | 2465 | 62,000 P |
| RX15 | 37.5 | 2257 | 38,500 | 42.2 | 2507 | 51,800 C |
| H-380 | 39.0 | 2178 | 33,200 | 45.0+ | 2447 | 43,800 C |
| N150 | 38.5 | 2259 | 45,700 | 43.0 | 2476 | 60,200 P |
| AA2700 | 42.0 | 2211 | 40,700 | 47.5+ | 2458 | 51,300 C |
| 760 | 41.0 | 2124 | 35,000 | 46.2+ | 2423 | 47,500 C |
| H-414 | 39.5 | 2075 | 32,500 | 45.0+ | 2347 | 43,200 C |
| IMR-4350 | 43.0 | 2145 | 36,000 | 48.0+ | 2457 | 51,200 C |
| H-4831 | 45.0 | 2061 | 32,500 | 49.5+ | 2309 | 42,000 C |

**178 gr. Jacketed A-Max** — 2.780" OAL — **BC:** .495 **SD:** .268

| Powder | Sugg Starting Grains | Velocity fps | Pressure P.S.I. | Max Load Grains | Velocity fps | Pressure P.S.I. |
|---|---|---|---|---|---|---|
| IMR-3031 | 37.0 | 2292 | 39,700 | 41.0 | 2591 | 58,500 |
| IMR-4895 | 37.5 | 2267 | 39,500 | 42.0 | 2600 | 60,400 |
| H-335 | 38.5 | 2253 | 39,700 | 42.8 | 2604 | 57,600 |
| BL-C(2) | 40.0 | 2325 | 39,200 | 44.8 | 2687 | 59,300 |
| AA2460 | 37.0 | 2262 | 39,000 | 42.0 | 2596 | 59,400 |
| 748 | 40.5 | 2346 | 39,900 | 45.0 | 2662 | 60,500 |
| IMR-4064 | 39.5 | 2373 | 43,600 | 44.3 | 2669 | 61,100 |
| Varget | 39.5 | 2401 | 43,700 | 44.0 | 2661 | 60,500 |
| AA2520 | 38.0 | 2357 | 45,000 | 42.3 | 2593 | 59,500 |
| IMR-4320 | 38.5 | 2273 | 40,100 | 42.6 | 2585 | 58,700 |
| N140 | 39.5 | 2340 | 44,500 | 43.8 | 2614 | 61,700 |
| N150 | 40.5 | 2390 | 44,600 | 45.2 | 2637 | 60,800 |
| 760 | 46.0 | 2432 | 44,100 | 50.7 | 2691 | 59,000 |
| **H-414** | **44.0** | **2357** | **43,700** | 49.3 | 2632 | 58,900 |
| IMR-4350 | 45.0 | 2326 | 41,600 | 50.0 | 2631 | 58,400 |

**190 gr. Jacketed HPBT** — 2.775" OAL — **BC:** .533 **SD:** .286

| Powder | Sugg Starting Grains | Velocity fps | Pressure | Max Load Grains | Velocity fps | Pressure |
|---|---|---|---|---|---|---|
| IMR-4895 | 37.0 | 2217 | 35,500 | 41.5 | 2500 | 51,200 C |
| AA2460 | 37.5 | 2300 | 45,600 | 41.8 | 2546 | 61,700 P |
| 748 | 39.0 | 2281 | 35,500 | 44.1 | 2573 | 51,100 C |
| IMR-4064 | 35.5 | 2192 | 37,100 | 41.0+ | 2470 | 48,100 C |
| **Varget** | 38.5 | 2322 | 43,900 | **42.8+** | **2575** | **60,200 P** |
| AA2520 | 37.5 | 2291 | 45,100 | 41.7 | 2522 | 59,300 P |
| IMR-4320 | 39.0 | 2247 | 39,000 | 43.0 | 2481 | 50,800 C |
| N140 | 37.5 | 2231 | 40,900 | 42.0 | 2500 | 58,300 P |
| RX15 | 38.5 | 2332 | 38,500 | 42.5 | 2549 | 50,500 C |
| H-380 | 43.0 | 2409 | 42,400 | 48.0+ | 2624 | 51,200 C |
| N150 | 39.5 | 2338 | 45,500 | 44.0+ | 2571 | 60,700 P |
| N550 | 42.5 | 2396 | 44,300 | 47.0+ | 2667 | 60,900 P |
| 760 | 42.0 | 2225 | 36,300 | 47.2+ | 2522 | 50,600 C |
| H-414 | 40.5 | 2166 | 32,400 | 46.0+ | 2426 | 44,300 C |
| IMR-4350 | 38.5 | 2101 | 35,000 | 44.0+ | 2366 | 45,800 C |

**#311359** — 115 gr. (#2 Alloy) 2.430" OAL — **BC:** .181 **SD:** .173

| Powder | Sugg Starting Grains | Velocity fps | Pressure C.U.P. | Max Load Grains | Velocity fps | Pressure C.U.P. |
|---|---|---|---|---|---|---|
| Red Dot | 10.0 | 1623 | 24,000 | 14.0 | 2000 | 39,400 |
| 700X | 9.0 | 1540 | 24,600 | 12.5 | 1879 | 40,300 |
| Green Dot | 11.0 | 1692 | 25,200 | 15.0 | 2049 | 40,300 |
| PB | 10.5 | 1601 | 24,600 | 13.5 | 1879 | 38,600 |
| **Unique** | **12.0** | **1831** | **24,600** | 17.0 | 2272 | 40,700 |
| SR-7625 | 12.0 | 1704 | 26,400 | 15.0 | 1953 | 39,400 |
| Herco | 14.0 | 1886 | 25,800 | 17.0 | 2159 | 38,600 |

**Note:** Loads shown in shaded panels are maximum.
Loads shown in bold designate potentially most accurate load.
+ Designates a compressed powder charge.
In pressure column, C=Copper Units of Pressure (CUP); P=Pounds per Square Inch (PSI)

# 308 Winchester (7.62 x 51mm) (7.62 NATO)

**#311672**
160 gr. (#2 Alloy) 2.635" OAL
**BC:** .272
**SD:** .241

| Powder | Sugg Starting Grains | Velocity fps | Pressure P.S.I. | Max Load Grains | Velocity fps | Pressure P.S.I. |
|---|---|---|---|---|---|---|
| Unique | 9.8 | 1386 | 20,700 | 13.0 | 1646 | 31,800 |
| **SR-7625** | **10.7** | **1391** | **20,000** | 14.0 | 1655 | 31,800 |
| SR-4756 | 11.3 | 1404 | 17,400 | 14.5 | 1656 | 27,900 |
| 2400 | 15.5 | 1501 | 14,600 | 19.5 | 1805 | 23,200 |
| SR-4759 | 18.0 | 1638 | 15,000 | 27.5 | 2317 | 49,900 |
| IMR-4227 | 20.0 | 1596 | 13,000 | 30.0 | 2328 | 40,600 |
| **XMP-5744** | **20.0** | **1672** | **17,000** | 31.0 | 2337 | 40,700 |
| IMR-4198 | 21.0 | 1674 | 14,200 | 31.7 | 2378 | 37,800 |
| XMR-2015 | 25.0 | 1602 | 12,300 | 35.0 | 2318 | 30,900 |
| RX7 | 25.0 | 1703 | 13,600 | 34.7 | 2356 | 34,700 |
| IMR-3031 | 28.0 | 1634 | 13,400 | 38.0 | 2347 | 30,900 |

**#311291**
170 gr. (#2 Alloy) 2.510" OAL
**BC:** .202
**SD:** .256

| Powder | Sugg Starting Grains | Velocity fps | Pressure | Max Load Grains | Velocity fps | Pressure |
|---|---|---|---|---|---|---|
| Unique | 10.0 | 1368 | 23,400 | 15.0 | 1816 | 37,700 C |
| SR-7625 | 10.0 | 1290 | 28,800 | 13.0 | 1560 | 39,900 C |
| SR-4756 | 12.0 | 1416 | 30,000 | 14.5 | 1607 | 37,700 C |
| 2400 | 16.5 | 1606 | 21,600 | 23.0 | 2010 | 37,700 P |
| SR-4759 | 19.5 | 1847 | 22,300 | 26.0 | 2255 | 47,800 C |
| IMR-4227 | 21.5 | 1867 | 22,400 | 27.8 | 2270 | 49,500 C |
| **XMP-5744** | **19.0** | **1615** | **18,100** | 31.0 | 2356 | 51,600 P |
| IMR-4198 | 24.0 | 1897 | 22,700 | 30.5 | 2341 | 48,200 C |
| **RX7** | **23.0** | **1870** | **21,200** | 41.5 | 2602 | 49,700 C |
| IMR-3031 | 28.5 | 1868 | 20,200 | 39.5+ | 2653 | 49,800 C |

**#311041**
173 gr. (#2 Alloy) 2.617" OAL
**BC:** .220
**SD:** .260

| Powder | Sugg Starting Grains | Velocity fps | Pressure | Max Load Grains | Velocity fps | Pressure |
|---|---|---|---|---|---|---|
| Unique | 10.0 | 1377 | 21,600 | 15.0 | 1802 | 37,700 C |
| SR-7625 | 10.0 | 1272 | 24,600 | 13.0 | 1499 | 38,600 C |
| SR-4756 | 12.0 | 1392 | 27,000 | 14.5 | 1587 | 37,700 C |
| 2400 | 16.0 | 1595 | 20,300 | 22.5 | 2008 | 37,700 P |
| SR-4759 | 21.5 | 1897 | 26,100 | 27.7 | 2345 | 50,300 C |
| IMR-4227 | 20.5 | 1712 | 21,100 | 28.0 | 2183 | 42,600 P |
| **XMP-5744** | **20.0** | **1681** | **19,200** | 32.0 | 2361 | 47,400 P |
| IMR-4198 | 25.0 | 1898 | 22,700 | 34.0 | 2460 | 38,700 C |
| RX7 | 27.5 | 1924 | 24,100 | 39.0 | 2627 | 48,900 C |
| IMR-3031 | 29.0 | 1858 | 23,500 | 41.8 | 2709 | 51,200 C |
| H-335 | 30.0 | 1847 | 19,800 | 44.2 | 2787 | 50,200 C |

**#311332**
180 gr. (#2 Alloy) 2.705" OAL
**BC:** .320
**SD:** .271

| Powder | Sugg Starting Grains | Velocity fps | Pressure | Max Load Grains | Velocity fps | Pressure |
|---|---|---|---|---|---|---|
| Unique | 12.2 | 1425 | 23,000 | 15.5 | 1692 | 38,000 C |
| SR-7625 | 11.5 | 1270 | 21,500 | 14.0 | 1492 | 36,400 C |
| SR-4756 | 13.0 | 1378 | 22,700 | 15.5 | 1587 | 36,400 C |
| 2400 | 17.0 | 1599 | 20,000 | 24.0 | 2034 | 40,100 P |
| SR-4759 | 23.5 | 1827 | 25,000 | 26.3 | 2035 | 38,600 C |
| IMR-4227 | 25.0 | 1867 | 24,300 | 29.0 | 2126 | 36,900 C |
| **XMP-5744** | **21.0** | **1667** | **19,300** | 32.5 | 2308 | 49,200 P |
| IMR-4198 | 26.5 | 1856 | 22,000 | 32.0 | 2229 | 40,200 C |
| RX7 | 28.0 | 1827 | 20,800 | 32.0 | 2172 | 35,800 C |
| XMR-2015 | 31.0 | 1891 | 19,500 | 36.0 | 2324 | 37,900 C |
| IMR-3031 | 33.0 | 2001 | 20,500 | 37.5 | 2361 | 37,800 C |
| H-335 | 32.0 | 1902 | 21,800 | 39.0 | 2316 | 36,800 C |
| IMR-4895 | 33.5 | 1909 | 20,000 | 39.0 | 2372 | 39,100 C |

**#311644**
190 gr. (#2 Alloy) 2.675" OAL
**BC:** .272
**SD:** .286

| Powder | Sugg Starting Grains | Velocity fps | Pressure | Max Load Grains | Velocity fps | Pressure |
|---|---|---|---|---|---|---|
| Unique | 10.5 | 1289 | 21,000 | 14.5 | 1614 | 40,700 C |
| SR-7625 | 10.0 | 1174 | 21,300 | 14.0 | 1501 | 42,200 C |
| SR-4756 | 11.5 | 1292 | 22,000 | 14.5 | 1531 | 37,900 C |
| 2400 | 17.0 | 1596 | 21,500 | 24.0 | 2022 | 42,800 P |
| SR-4759 | 20.0 | 1682 | 21,600 | 26.0 | 2029 | 47,100 C |
| **IMR-4227** | **21.0** | **1720** | **23,100** | 28.0 | 2117 | 42,300 P |
| XMP-5744 | 19.5 | 1578 | 18,200 | 32.5 | 2349 | 55,800 P |
| IMR-4198 | 23.5 | 1760 | 21,900 | 31.0 | 2192 | 45,400 C |
| RX7 | 25.0 | 1738 | 18,500 | 33.0 | 2222 | 41,700 C |
| XMR-2015 | 28.0 | 1833 | 21,200 | 38.0 | 2340 | 47,700 C |
| IMR-3031 | 32.0 | 1943 | 22,700 | 40.0+ | 2435 | 48,100 C |
| H-335 | 31.0 | 1875 | 22,300 | 40.0 | 2409 | 46,800 C |
| IMR-4895 | 33.0 | 1923 | 22,800 | 42.0+ | 2447 | 49,200 C |

**#311299**
200 gr. (#2 Alloy) 2.875" OAL
**BC:** .377
**SD:** .301

| Powder | Sugg Starting Grains | Velocity fps | Pressure P.S.I. | Max Load Grains | Velocity fps | Pressure P.S.I. |
|---|---|---|---|---|---|---|
| Unique | 11.5 | 1400 | 28,300 | 16.0 | 1699 | 45,400 |
| AA#9 | 17.0 | 1616 | 23,600 | 23.0 | 1983 | 43,400 |
| 2400 | 18.0 | 1638 | 23,600 | 24.0 | 1995 | 43,700 |
| SR-4759 | 17.0 | 1590 | 22,300 | 24.0 | 1993 | 45,700 |
| IMR-4227 | 19.5 | 1617 | 19,400 | 26.0 | 1994 | 38,100 |
| **XMP-5744** | 20.0 | 1608 | 19,700 | **27.0** | **2016** | **35,300** |
| N130 | 22.0 | 1598 | 17,200 | 28.5 | 2005 | 30,900 |
| IMR-4198 | 20.5 | 1615 | 18,300 | 27.3 | 1999 | 30,900 |
| RX7 | 22.0 | 1622 | 19,300 | 29.0 | 2014 | 33,800 |
| Varget | 28.0 | 1608 | 15,700 | 34.0 | 1994 | 25,800 |

**Note:** Loads shown in shaded panels are maximum.
Loads shown in bold designate potentially most accurate load.
+ Designates a compressed powder charge.
In pressure column, C=Copper Units of Pressure (CUP); P=Pounds per Square Inch (PSI)

# 30-06 Springfield (7.62 x 63mm)

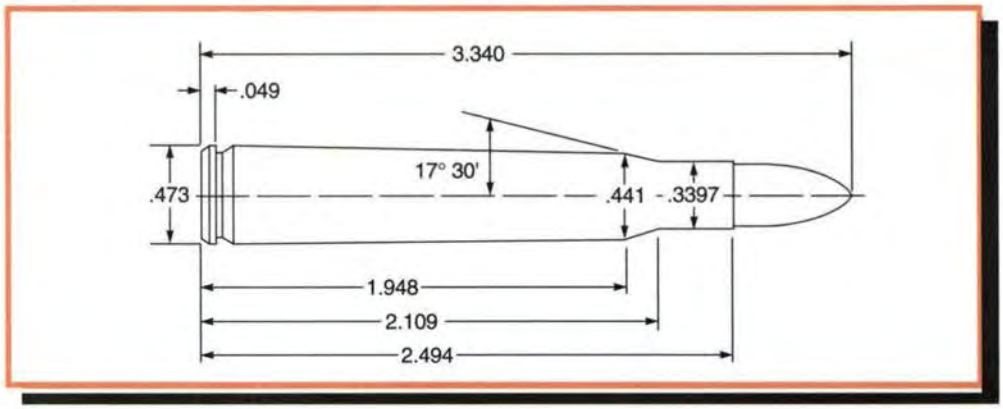


**Comments:**

The 30-06 has reigned for 100 years as probably the most popular American center-fire rifle cartridge. Its ability to shoot bullets from 110 to 220-grains and digest a wide number of smokeless powders gives it a flexibility that few rifle cartridges can match. As a military cartridge, it served the United States in both World Wars and Korea. In civil guise, it has hunted all of North America and most — if not all — of the rest of the world, and dominated High-Power rifle competition for years. The 30-06 has served as the basis for many of our current rifle cartridges as well as the parent of innumerable wildcats. The 30-06 is still going strong despite the best efforts by some gunwriters over the years to declare it obsolete. Reloading dies for the 30-06 have consistently been one of the three best selling Lyman die sets for decades.

The 30-06 evolved from the short-lived 30-03 cartridge originally chambered in M1903 Springfield Rifle. In spite of the thoroughly modern design of the new '03 rifle, the ballistics of the 30-03 showed little improvement over the 30-40 Krag, which it replaced. The German military's refinement of their 7.92x57mm cartridge with a 154-grain spitzer bullet in 1905 caught the attention of the world's major powers. The just-adopted 30-03 with its 220-grain round nose bullet at 2,300 feet per second became obsolete overnight. The U.S. military refined the 30-03 into the 30-06 in short order. The newly altered cartridge featured a case shortened by .070" and fired a 152-grain bullet at 2,740 feet per second. This cartridge served in the U.S. military in numerous loadings into the early 1960s. The original 30-03 round survived a few more years as a chambering in Winchester's Model 95 before finally fading into history.

While the 30-06 is an extremely flexible cartridge, shooters loading for the M1 Garand rifle must follow certain precautions. The Garand's gas system is designed around military issue ammunition with bullets usually weighing either 152 or 173-grains. The best powders for loading in the M1 Garand are IMR-4895, or IMR-4064. Garand shooters should stick with spitzer bullets weighing between 150 to 168-grains. Round nosed bullets may not feed properly through the M1's mechanism. Moreover, the use of heavier bullets can eventually damage the rifle's operating system. Shooters reloading military cases should keep maximum loads one to two grains below those listed here. Cases should be full-length sized for proper functioning as in any semiautomatic rifle.

The wide-range of bullet weights usable in the 30-06 mandate some discretion in powder selection. Mid-range powders such as IMR-4895 usually work well with all bullet weights. Lighter bullets will work with faster powders such as, IMR-3031 or H-335. Heavier 200 and 220-grain bullets should respond well with IMR-4350, Reloder 19 and other slower burning powders.

The 30-06 also works extremely well with cast bullets. Results can vary from one gun to the next and shooters will often need to experiment with sizing diameters and seating depths but the results are well worth it. Shooters loading for the M1903A3 rifles with two-groove barrels have had particularly good accuracy from Lyman cast bullets #311291 and #311644. Best powder choices for cast bullets include Reloder 7, XMP-5744, and SR-4759.

**Test Components:**

Cases . . . . . .Winchester
Trim-to Length . . . . . .2.484"
Primers . . . . . .Winchester WLR
Primer Size . . . . . .Large Rifle
Lyman Shell Holder . . . . . .No. 2
Jacketed Bullets Used . . . . . .Sierra HP #2110, 110 gr.
Sierra SP #2120, 125 gr.
Hornady SP #3020, 130 gr.
Hornady SP # 3031, 150 gr.
Barnes XLC #30854, 150 gr.
Nosler Ballistic Tip #30165, 165 gr.
Sierra HPBT #2200, 168 gr.
Barnes X #30835, 180 gr.
Sierra SBT #2160, 180 gr.
Sierra HPBT #2210, 190 gr.
Sierra HPBT #2230, 200 gr.
Hornady RN #3090, 220 gr.

Cast Bullets Used . . . . . .(sized to .309" dia)
*gas check bullet *#311359, 115 gr.
*#311672, 160 gr.
*#311291, 170 gr.
*#311041, 173 gr.
*#311644, 190 gr.
*#311299, 200 gr.
*#311284, 210 gr.

**Test Specifications:**
**(Velocity & Pressure)**

Firearm Used . . . . . .Universal Receiver
Barrel Length . . . . . .24"
Twist . . . . . .1-10"
Groove Dia. . . . . .308"

**Note:** Loads shown in shaded panels are maximum. Loads shown in bold designate potentially most accurate load.
+ Designates a compressed powder charge.
In pressure column, C=Copper Units of Pressure (CUP); P=Pounds per Square Inch (PSI)

# 30-06 Springfield (7.62 x 63mm)

### 110 gr. Jacketed HP
3.000" OAL

BC: .177
SD: .166

| Powder | Sugg Starting Grains | Velocity fps | Pressure | Max Load Grains | Velocity fps | Pressure |
|---|---|---|---|---|---|---|
| RX7 | 37.0 | 2736 | 35,500 | 42.0 | 3073 | 50,000 C |
| IMR-3031 | 47.0 | 2930 | 35,000 | 52.0 | 3257 | 46,700 C |
| H-335 | 45.0 | 2923 | 40,400 | 51.0 | 3203 | 48,900 C |
| IMR-4895 | 49.0 | 3012 | 39,400 | 53.5 | 3266 | 50,000 C |
| BL-C(2) | 51.0 | 3144 | 41,100 | 55.0 | 3378 | 50,400 C |
| AA2460 | 53.0 | 3122 | 41,900 | 58.5 | 3453 | 58,600 P |
| 748 | 51.0 | 3060 | 39,000 | 60.0 | 3387 | 49,000 C |
| **IMR-4064** | 50.0 | 3030 | 39,000 | **55.5** | **3356** | **48,800 C** |
| IMR-4320 | 50.0 | 2906 | 38,600 | 55.5 | 3184 | 49,600 C |
| 760 | 55.5 | 2922 | 33,800 | 63.0+ | 3206 | 42,900 C |
| IMR-4350 | 56.0 | 2898 | 37,300 | 61.0+ | 3194 | 45,400 C |
| H-4831 | 55.0 | 2557 | 28,800 | 61.5+ | 2985 | 39,400 C |

### 130 gr. Jacketed SP
3.090" OAL

BC: .295
SD: .196

| Powder | Sugg Starting Grains | Velocity fps | Pressure | Max Load Grains | Velocity fps | Pressure |
|---|---|---|---|---|---|---|
| IMR-3031 | 45.0 | 2793 | 36,400 | 50.0 | 3048 | 45,000 C |
| H-335 | 46.0 | 2813 | 40,800 | 52.0 | 3081 | 50,000 C |
| IMR-4895 | 48.0 | 2890 | 42,000 | 51.0 | 3036 | 49,900 C |
| BL-C(2) | 49.0 | 2932 | 38,100 | 53.5 | 3174 | 48,400 C |
| AA-2460 | 49.5 | 2856 | 42,000 | 55.0 | 3196 | 58,800 P |
| **748** | 53.0 | 2967 | 46,800 | **58.0** | **3214** | **56,500 P** |
| IMR-4064 | 48.0 | 2808 | 36,000 | 54.0 | 3184 | 49,600 C |
| IMR-4320 | 49.0 | 2793 | 39,000 | 54.0 | 3076 | 48,400 C |
| H-380 | 51.0 | 2967 | 42,000 | 54.5 | 3125 | 50,000 C |
| 760 | 55.5 | 2822 | 35,000 | 63.0+ | 3111 | 44,200 C |
| IMR-4350 | 51.0 | 2623 | 34,200 | 58.0+ | 2949 | 44,200 C |
| IMR-4831 | 57.0 | 2686 | 32,900 | 62.0+ | 2984 | 44,400 C |
| H-4831 | 55.0 | 2570 | 32,500 | 61.5+ | 2923 | 41,600 C |

### 150 gr. Jacketed XLC
3.230" OAL

BC: .428
SD: .226

| Powder | Sugg Starting Grains | Velocity fps | Pressure P.S.I. | Max Load Grains | Velocity fps | Pressure P.S.I. |
|---|---|---|---|---|---|---|
| IMR-3031 | 44.0 | 2538 | 37,600 | 49.2 | 2874 | 55,400 |
| H-335 | 46.0 | 2607 | 43,300 | 51.2 | 2918 | 59,500 |
| IMR-4895 | 47.0 | 2624 | 41,400 | 52.5 | 2952 | 58,400 |
| 748 | 48.0 | 2680 | 43,800 | 53.0 | 2963 | 59,000 |
| BL-C(2) | 48.5 | 2646 | 42,700 | 54.0 | 2970 | 59,400 |
| IMR-4064 | 47.0 | 2515 | 36,500 | 52.0 | 2900 | 55,900 |
| IMR-4320 | 47.0 | 2598 | 41,800 | 52.5 | 2916 | 58,400 |
| **RX15** | 48.0 | 2569 | 38,700 | **52.5** | **2940** | **57,900** |
| N150 | 49.5 | 2636 | 41,600 | 55.0 | 2945 | 59,300 |
| H-380 | 52.5 | 2664 | 43,000 | 58.5 | 2931 | 56,400 |
| N550 | 53.0 | 2696 | 43,100 | 59.0 | 3002 | 57,300 |
| 760 | 53.5 | 2797 | 47,600 | 59.5 | 3005 | 57,900 |

### 125 gr. Jacketed SP
3.080" OAL

BC: .279
SD: .188

| Powder | Sugg Starting Grains | Velocity fps | Pressure | Max Load Grains | Velocity fps | Pressure |
|---|---|---|---|---|---|---|
| RX7 | 38.5 | 2710 | 38,500 | 43.0 | 2932 | 47,600 C |
| IMR-3031 | 45.0 | 2732 | 33,000 | 50.0 | 3095 | 45,000 C |
| H-335 | 45.5 | 2815 | 37,500 | 51.5 | 3144 | 48,500 C |
| IMR-4895 | 48.0 | 2815 | 36,500 | 53.5 | 3096 | 47,300 C |
| BL-C(2) | 49.0 | 2890 | 35,000 | 54.0 | 3215 | 48,000 C |
| AA-2460 | 50.5 | 2737 | 35,600 | 56.0 | 3222 | 57,000 P |
| 748 | 51.5 | 2890 | 35,300 | 58.0 | 3241 | 48,300 C |
| IMR-4064 | 48.0 | 2762 | 31,500 | 55.0 | 3215 | 47,200 C |
| **IMR-4320** | 49.0 | 2770 | 36,000 | **55.0** | **3105** | **46,700 C** |
| H-380 | 51.0 | 2967 | 39,000 | 56.5 | 3194 | 49,600 C |
| 760 | 56.0 | 2801 | 34,200 | 63.0+ | 3215 | 47,600 C |
| IMR-4350 | 55.0 | 2754 | 34,000 | 61.0+ | 3105 | 46,000 C |
| IMR-4831 | 57.0 | 2700 | 33,600 | 63.0+ | 3017 | 43,200 C |
| H-4831 | 55.0 | 2544 | 30,000 | 61.5+ | 2906 | 40,000 C |

### 150 gr. Jacketed SP
3.200" OAL

BC: .338
SD: .226

| Powder | Sugg Starting Grains | Velocity fps | Pressure | Max Load Grains | Velocity fps | Pressure |
|---|---|---|---|---|---|---|
| IMR-3031 | 42.0 | 2450 | 29,400 | 50.0 | 2932 | 48,000 C |
| AA2230 | 46.0 | 2597 | 39,800 | 51.0 | 2870 | 49,300 C |
| IMR-4895 | 46.0 | 2680 | 36,900 | 51.5 | 2958 | 49,200 C |
| BL-C(2) | 46.0 | 2770 | 44,600 | 51.0 | 2932 | 48,000 C |
| AA-2460 | 46.5 | 2597 | 38,500 | 51.7 | 2869 | 48,500 C |
| **IMR-4064** | **48.0** | **2695** | **36,000** | 53.0 | 3012 | 49,600 C |
| IMR-4320 | 47.0 | 2624 | 37,300 | 53.0 | 2923 | 48,400 C |
| RX15 | 50.5 | 2777 | 40,000 | 54.0 | 2987 | 49,300 C |
| H-380 | 48.0 | 2724 | 40,300 | 53.0 | 2976 | 50,000 C |
| 760 | 48.0 | 2535 | 34,200 | 56.0 | 2878 | 49,600 C |
| N160 | 54.5 | 2588 | 35,900 | 60.5+ | 2919 | 50,500 P |
| IMR-4350 | 49.0 | 2545 | 37,300 | 57.0+ | 2887 | 47,800 C |
| RX19 | 58.5 | 2690 | 40,800 | 64.3+ | 2925 | 49,600 C |
| IMR-4831 | 55.0 | 2571 | 33,800 | 61.0+ | 2903 | 47,100 C |
| H-4831 | 55.0 | 2551 | 33,000 | 61.5+ | 2890 | 43,300 C |

### 165 gr. Jacketed Ballistic Tip
3.285" OAL

BC: .475
SD: .248

| Powder | Sugg Starting Grains | Velocity fps | Pressure P.S.I. | Max Load Grains | Velocity fps | Pressure P.S.I. |
|---|---|---|---|---|---|---|
| IMR-3031 | 44.0 | 2495 | 38,500 | 49.0 | 2784 | 56,100 |
| H335 | 43.0 | 2474 | 42,600 | 48.0 | 2690 | 54,300 |
| IMR-4895 | 45.0 | 2503 | 37,700 | 50.0 | 2815 | 56,200 |
| **IMR-4064** | 47.0 | 2495 | 38,000 | **52.0** | **2851** | **58,100** |
| IMR-4320 | 47.0 | 2542 | 41,200 | 52.0 | 2843 | 57,500 |
| RX15 | 47.0 | 2531 | 39,300 | 52.0 | 2807 | 53,600 |
| H-380 | 48.5 | 2515 | 40,100 | 53.0 | 2804 | 54,000 |
| 760 | 52.5 | 2697 | 43,500 | 57.0 | 2959 | 58,600 |
| IMR-4350 | 52.5 | 2613 | 45,100 | 57.0+ | 2878 | 56,600 |
| RX19 | 54.5 | 2464 | 37,600 | 60.4+ | 2816 | 53,300 |
| N160 | 55.5 | 2597 | 41,100 | 61.0+ | 2895 | 56,500 |
| IMR-4831 | 54.0 | 2485 | 38,400 | 59.0+ | 2786 | 52,000 |
| H-4831 | 56.0 | 2431 | 34,900 | 62.0+ | 2754 | 49,000 |
| WXR | 55.0 | 2401 | 34,200 | 61.0+ | 2720 | 47,800 |

**Note:** Loads shown in shaded panels are maximum.
Loads shown in bold designate potentially most accurate load.
\+ Designates a compressed powder charge.
In pressure column, C=Copper Units of Pressure (CUP); P=Pounds per Square Inch (PSI)

# 30-06 Springfield (7.62 x 63mm)

**168 gr. Jacketed HPBT** — 3.300" OAL — **BC:** .462 **SD:** .253

| Powder | Sugg Starting Grains | Velocity fps | Pressure | Max Load Grains | Velocity fps | Pressure |
|---|---|---|---|---|---|---|
| IMR-3031 | 42.0 | 2463 | 34,000 | 48.0 | 2808 | 49,600 C |
| **IMR-4895** | **43.0** | **2444** | **35,500** | 48.5 | 2762 | 47,600 C |
| IMR-4064 | 45.0 | 2551 | 34,000 | 50.0 | 2816 | 46,700 C |
| AA2520 | 42.5 | 2383 | 36,200 | 48.0 | 2653 | 48,800 C |
| IMR-4320 | 45.0 | 2475 | 36,400 | 51.0 | 2816 | 50,000 C |
| RX15 | 47.5 | 2592 | 38,800 | 51.8 | 2832 | 50,000 C |
| AA2700 | 49.5 | 2475 | 41,800 | 55.0 | 2745 | 54,900 P |
| 760 | 50.0 | 2541 | 37,300 | 57.0 | 2839 | 49,700 C |
| IMR-4350 | 52.0 | 2590 | 38,000 | 57.0+ | 2873 | 50,400 C |
| RX19 | 55.0 | 2489 | 37,800 | 60.9+ | 2810 | 50,000 C |
| N160 | 55.0 | 2559 | 39,800 | 61.0+ | 2891 | 58,800 P |
| IMR-4831 | 54.5 | 2544 | 35,700 | 60.6+ | 2847 | 47,800 C |
| H-4831 | 55.0 | 2564 | 37,300 | 61.5+ | 2873 | 47,200 C |
| WXR | 55.0 | 2489 | 38,100 | 61.0+ | 2799 | 53,300 P |

**180 gr. Barnes "X"** — 3.275" OAL — **BC:** .511 **SD:** .271

| Powder | Sugg Starting Grains | Velocity fps | Pressure | Max Load Grains | Velocity fps | Pressure |
|---|---|---|---|---|---|---|
| IMR-4895 | 41.5 | 2307 | 37,500 | 47.0 | 2578 | 48,100 C |
| IMR-4064 | 43.0 | 2447 | 34,000 | 48.5 | 2614 | 48,300 C |
| AA2520 | 40.0 | 2209 | 38,700 | 45.5 | 2467 | 48,500 C |
| IMR-4320 | 41.5 | 2178 | 35,700 | 47.5 | 2497 | 45,700 C |
| 760 | 47.0 | 2325 | 37,100 | 53.3 | 2557 | 48,000 C |
| IMR-4350 | 51.0 | 2399 | 37,500 | 55.7+ | 2688 | 49,200 C |
| **RX19** | 52.0 | 2336 | 37,200 | **57.0+** | **2627** | **49,700 C** |
| N160 | 53.0 | 2492 | 45,600 | 58.5+ | 2733 | 59,600 P |
| IMR-4831 | 52.0 | 2374 | 34,100 | 57.6+ | 2717 | 48,700 C |
| XMR-3100 | 54.5 | 2419 | 40,500 | 59.8+ | 2625 | 48,400 C |
| H-4831 | 52.0 | 2390 | 38,200 | 57.4+ | 2649 | 48,100 C |
| WXR | 55.0 | 2513 | 47,300 | 61.0+ | 2756 | 59,400 P |
| RX22 | 54.5 | 2441 | 38,200 | 61.5+ | 2715 | 48,200 C |

**180 gr. Jacketed SBT** — 3.280" OAL — **BC:** .475 **SD:** .271

| Powder | Sugg Starting Grains | Velocity fps | Pressure | Max Load Grains | Velocity fps | Pressure |
|---|---|---|---|---|---|---|
| IMR-4895 | 42.0 | 2386 | 36,000 | 47.5 | 2659 | 48,000 C |
| IMR-4064 | 43.0 | 2403 | 35,000 | 49.0 | 2710 | 47,200 C |
| AA2520 | 41.0 | 2275 | 35,400 | 47.3 | 2572 | 49,700 C |
| IMR-4320 | 41.0 | 2281 | 35,800 | 46.3 | 2584 | 49,900 C |
| 760 | 45.0 | 2360 | 35,500 | 52.0 | 2666 | 49,000 C |
| **IMR-4350** | 50.0 | 2469 | 38,300 | **56.0+** | **2801** | **50,000 C** |
| RX19 | 52.0 | 2497 | 41,200 | 58.3+ | 2698 | 48,800 C |
| N160 | 53.0 | 2418 | 37,700 | 58.5+ | 2743 | 55,100 P |
| IMR-4831 | 52.5 | 2525 | 39,000 | 58.4+ | 2788 | 48,700 C |
| XMR-3100 | 53.5 | 2425 | 38,300 | 59.0+ | 2648 | 48,300 C |
| H-4831 | 55.0 | 2604 | 40,300 | 60.0+ | 2840 | 50,000 C |
| WXR | 54.0 | 2311 | 33,600 | 60.0+ | 2674 | 50,300 P |
| RX22 | 55.5 | 2536 | 39,300 | 60.8+ | 2780 | 48,400 C |

**190 gr. Jacketed HPBT** — 3.280" OAL — **BC:** .533 **SD:** .286

| Powder | Sugg Starting Grains | Velocity fps | Pressure | Max Load Grains | Velocity fps | Pressure |
|---|---|---|---|---|---|---|
| IMR-4895 | 41.0 | 2288 | 35,000 | 46.0 | 2569 | 50,000 C |
| IMR-4064 | 42.0 | 2309 | 32,500 | 47.5 | 2624 | 48,400 C |
| AA2520 | 41.0 | 2233 | 36,800 | 46.0 | 2469 | 48,500 C |
| **IMR-4320** | 44.0 | 2341 | 34,500 | **49.0** | **2631** | **48,800 C** |
| 760 | 46.0 | 2350 | 36,200 | 53.0 | 2662 | 50,000 C |
| H-414 | 47.0 | 2368 | 36,200 | 54.0 | 2694 | 49,800 C |
| IMR-4350 | 45.0 | 2205 | 31,500 | 51.0 | 2586 | 50,000 C |
| RX19 | 51.5 | 2341 | 37,300 | 56.0+ | 2606 | 48,300 C |
| N160 | 52.0 | 2383 | 39,800 | 58.0 | 2695 | 57,400 P |
| IMR-4831 | 51.0 | 2395 | 37,300 | 56.8+ | 2686 | 49,300 C |
| XMR-3100 | 53.5 | 2368 | 38,800 | 59.0+ | 2614 | 48,600 C |
| H-4831 | 53.0 | 2450 | 36,900 | 59.0+ | 2724 | 47,200 C |
| WXR | 53.0 | 2341 | 38,200 | 58.0+ | 2647 | 54,100 P |
| RX22 | 55.0 | 2461 | 37,800 | 60.5+ | 2722 | 48,700 C |

**200 gr. Jacketed HPBT** — 3.280" OAL — **BC:** .565 **SD:** .301

| Powder | Sugg Starting Grains | Velocity fps | Pressure | Max Load Grains | Velocity fps | Pressure |
|---|---|---|---|---|---|---|
| IMR-4895 | 41.0 | 2262 | 37,300 | 46.5 | 2512 | 48,400 C |
| IMR-4064 | 42.0 | 2309 | 38,100 | 47.0 | 2552 | 50,000 C |
| IMR-4320 | 43.0 | 2294 | 38,600 | 47.5 | 2502 | 47,600 C |
| 760 | 45.0 | 2224 | 36,300 | 52.0 | 2565 | 50,000 C |
| H-414 | 46.0 | 2258 | 35,000 | 53.0 | 2606 | 49,800 C |
| IMR-4350 | 49.0 | 2380 | 39,900 | 54.0+ | 2638 | 48,400 C |
| RX19 | 51.5 | 2302 | 36,500 | 55.6+ | 2526 | 45,800 C |
| N160 | 51.5 | 2340 | 38,800 | 57.0+ | 2655 | 58,000 P |
| IMR-4831 | 50.0 | 2323 | 35,800 | 55.5+ | 2587 | 47,400 C |
| XMR-3100 | 53.0 | 2336 | 39,000 | 58.8+ | 2573 | 48,600 C |
| H-4831 | 52.0 | 2343 | 36,400 | 58.0+ | 2620 | 46,300 C |
| **WXR** | 52.0 | 2360 | 40,800 | **58.0+** | **2659** | **57,600 P** |
| RX22 | 53.0 | 2340 | 40,900 | 59.0+ | 2650 | 56,600 P |

**220 gr. Jacketed RN** — 3.220" OAL — **BC:** .300 **SD:** .331

| Powder | Sugg Starting Grains | Velocity fps | Pressure | Max Load Grains | Velocity fps | Pressure |
|---|---|---|---|---|---|---|
| IMR-4064 | 41.0 | 2183 | 37,300 | 46.5 | 2439 | 49,200 C |
| IMR-4320 | 41.0 | 2118 | 36,400 | 47.5 | 2421 | 49,200 C |
| 760 | 44.5 | 2106 | 37,200 | 50.5 | 2381 | 49,400 C |
| H-414 | 45.0 | 2153 | 40,200 | 51.0 | 2379 | 49,200 C |
| IMR-4350 | 49.0 | 2309 | 40,700 | 53.0+ | 2500 | 49,200 C |
| **RX19** | 50.0 | 2127 | 34,600 | **55.8+** | **2451** | **48,800 C** |
| N160 | 52.0 | 2303 | 46,400 | 58.0+ | 2463 | 57,900 P |
| IMR-4831 | 49.5 | 2192 | 35,700 | 54.6+ | 2458 | 47,100 C |
| XMR-3100 | 51.5 | 2172 | 37,800 | 57.5 | 2427 | 49,000 C |
| H-4831 | 51.0 | 2283 | 38,600 | 57.5+ | 2583 | 50,000 C |
| WXR | 50.0 | 2208 | 38,500 | 56.0+ | 2490 | 55,100 P |
| RX22 | 53.0 | 2201 | 36,100 | 58.0+ | 2477 | 51,600 P |
| IMR-7828 | 51.0 | 2058 | 33,800 | 56.0+ | 2357 | 48,900 P |

**Note:** Loads shown in shaded panels are maximum.
Loads shown in bold designate potentially most accurate load.
\+ Designates a compressed powder charge.
In pressure column, C=Copper Units of Pressure (CUP); P=Pounds per Square Inch (PSI)

# 30-06 Springfield (7.62 x 63mm)

**#311359**
115 gr. (#2 Alloy) 2.909" OAL
**BC:** .181
**SD:** .173

| Powder | Sugg Starting Grains | Velocity fps | Pressure | Max Load Grains | Velocity fps | Pressure |
|---|---|---|---|---|---|---|
| Red Dot | 11.0 | 1683 | 23,400 | 15.0 | 2000 | 36,900 C |
| 700X | 10.0 | 1610 | 22,000 | 14.0 | 1953 | 38,100 C |
| Green Dot | 13.0 | 1792 | 28,800 | 16.0 | 2020 | 38,600 C |
| Unique | 14.0 | 1960 | 27,000 | 19.0 | 2331 | 42,000C |
| SR-7625 | 12.5 | 1677 | 21,600 | 16.5 | 2008 | 42,400 C |
| Herco | 14.5 | 1876 | 28,200 | 18.0 | 2132 | 39,000 C |
| **XMP-5744** | **24.0** | **1904** | **15,600** | 32.0 | 2399 | 26,600 P |

**#311291**
170 gr. (#2 Alloy) 3.013" OAL
**BC:** .202
**SD:** .256

| Powder | Sugg Starting Grains | Velocity fps | Pressure | Max Load Grains | Velocity fps | Pressure |
|---|---|---|---|---|---|---|
| Unique | 12.0 | 1508 | 24,000 | 16.5 | 1842 | 36,400 C |
| SR-7625 | 11.5 | 1363 | 23,400 | 14.5 | 1585 | 36,000 C |
| Herco | 12.5 | 1488 | 26,400 | 16.0 | 1697 | 35,500 C |
| SR-4756 | 12.5 | 1418 | 22,200 | 16.5 | 1692 | 35,500 C |
| 2400 | 18.5 | 1635 | 18,200 | 29.5 | 2296 | 43,100 C |
| SR-4759 | 20.0 | 1666 | 16,700 | 31.0 | 2325 | 46,900 C |
| **XMP-5744** | **26.0** | **1928** | **25,000** | 35.0 | 2388 | 45,600 P |
| IMR-4198 | 25.0 | 1729 | 15,100 | 38.5 | 2501 | 45,100 C |
| **RX7** | **25.0** | **1733** | **15,100** | 38.3 | 2480 | 47,600 C |
| IMR-3031 | 29.0 | 1710 | 13,900 | 42.0 | 2469 | 38,200 C |

**#311644**
190 gr. (#2 Alloy) 3.075" OAL
**BC:** .272
**SD:** .286

| Powder | Sugg Starting Grains | Velocity fps | Pressure | Max Load Grains | Velocity fps | Pressure |
|---|---|---|---|---|---|---|
| Unique | 13.0 | 1404 | 21,800 | 17.2 | 1677 | 36,800 C |
| SR-7625 | 12.2 | 1295 | 23,400 | 15.2 | 1514 | 38,000 C |
| Herco | 14.5 | 1437 | 20,500 | 18.0 | 1664 | 31,100 C |
| SR-4756 | 13.5 | 1378 | 23,600 | 17.0 | 1587 | 34,100 C |
| SR-4759 | 23.0 | 1716 | 21,000 | 28.2 | 1975 | 37,700 C |
| XMP-5744 | 27.0 | 1891 | 25,900 | 37.0 | 2385 | 49,900 P |
| **RX7** | **22.0** | **1650** | **21,000** | 38.0 | 2250 | 40,500 P |

**#311284**
210 gr. (#2 Alloy) 3.063" OAL
**BC:** .332
**SD:** .316

| Powder | Sugg Starting Grains | Velocity fps | Pressure | Max Load Grains | Velocity fps | Pressure |
|---|---|---|---|---|---|---|
| Unique | 11.5 | 1326 | 26,400 | 15.5 | 1577 | 36,400 C |
| SR-7625 | 11.5 | 1242 | 30,000 | 13.0 | 1320 | 36,400 C |
| Herco | 12.5 | 1335 | 30,500 | 15.5 | 1510 | 39,000 C |
| SR-4756 | 12.5 | 1264 | 26,400 | 15.5 | 1445 | 35,000 C |
| 2400 | 19.0 | 1592 | 27,000 | 24.0 | 1827 | 32,000 C |
| SR-4759 | 22.0 | 1679 | 27,800 | 27.8 | 2004 | 45,300 C |
| **XMP-5744** | **28.0** | **1885** | **30,300** | 38.5 | 2327 | 57,900 P |
| RX7 | 25.0 | 1685 | 22,200 | 38.2 | 2254 | 47,000 C |

**#311672**
160 gr. (#2 Alloy) 3.050" OAL
**BC:** .245
**SD:** .241

| Powder | Sugg Starting Grains | Velocity fps | Pressure P.S.I. | Max Load Grains | Velocity fps | Pressure P.S.I. |
|---|---|---|---|---|---|---|
| **Unique** | **18.0** | **1852** | **34,300** | 24.0 | 2182 | 56,700 |
| SR-4759 | 25.0 | 1950 | 24,700 | 33.0 | 2381 | 50,400 |
| XMP-5744 | 26.0 | 1929 | 22,000 | 35.0 | 2396 | 37,800 |
| IMR-4198 | 27.0 | 1940 | 19,600 | 37.0 | 2421 | 36,000 |
| RX7 | 28.0 | 1904 | 17,600 | 38.0 | 2411 | 36,700 |
| IMR-3031 | 32.0 | 1752 | 13,800 | 43.0 | 2384 | 29,800 |

**#311041**
173 gr. (#2 Alloy) 2.968" OAL
**BC:** .220
**SD:** .260

| Powder | Sugg Starting Grains | Velocity fps | Pressure | Max Load Grains | Velocity fps | Pressure |
|---|---|---|---|---|---|---|
| Unique | 12.0 | 1504 | 24,000 | 16.5 | 1811 | 35,500 C |
| SR-7625 | 11.5 | 1346 | 24,000 | 14.5 | 1570 | 36,900 C |
| Herco | 13.0 | 1497 | 27,000 | 16.0 | 1689 | 36,000 C |
| SR-4756 | 12.5 | 1406 | 22,800 | 16.5 | 1653 | 36,400 C |
| 2400 | 20.0 | 1751 | 22,200 | 27.0 | 2141 | 34,500 C |
| SR-4759 | 20.0 | 1642 | 13,900 | 31.5 | 2329 | 47,400 C |
| **XMP-5744** | **26.0** | **1929** | **24,300** | 34.0 | 2393 | 43,000 P |
| IMR-4198 | 25.0 | 1717 | 13,100 | 38.5 | 2463 | 43,100 C |
| RX7 | 25.0 | 1661 | 12,800 | 40.5 | 2515 | 46,900 C |
| IMR-3031 | 30.0 | 1636 | 11,100 | 44.0 | 2522 | 40,800 C |

**#311299**
200 gr. (#2 Alloy) 3.250" OAL
**BC:** .377
**SD:** .301

| Powder | Sugg Starting Grains | Velocity fps | Pressure P.S.I. | Max Load Grains | Velocity fps | Pressure P.S.I. |
|---|---|---|---|---|---|---|
| Unique | 12.7 | 1398 | 25,500 | 17.2 | 1673 | 38,300 |
| 2400 | 15.0 | 1376 | 15,400 | 21.0 | 1736 | 27,300 |
| SR-4759 | 19.5 | 1626 | 23,100 | 27.0 | 2002 | 42,300 |
| **IMR-4227** | 21.0 | 1600 | 19,100 | **29.0** | **1992** | **35,400** |
| XMP-5744 | 21.0 | 1609 | 19,500 | 29.5 | 1998 | 33,200 |
| N130 | 23.0 | 1575 | 17,000 | 31.0 | 2020 | 34,200 |
| IMR-4198 | 21.0 | 1601 | 19,100 | 30.0 | 1997 | 30,800 |
| RX7 | 22.0 | 1588 | 17,700 | 30.5 | 1989 | 30,300 |
| N133 | 25.0 | 1569 | 15,400 | 32.7 | 1981 | 27,700 |
| Varget | 30.0 | 1588 | 15,300 | 38.0 | 2017 | 27,800 |

**Note:** Loads shown in shaded panels are maximum.
Loads shown in bold designate potentially most accurate load.
In pressure column, C=Copper Units of Pressure (CUP); P=Pounds per Square Inch (PSI)

# 300 H & H Magnum (300 Holland & Holland) (7.63 x 72mm)

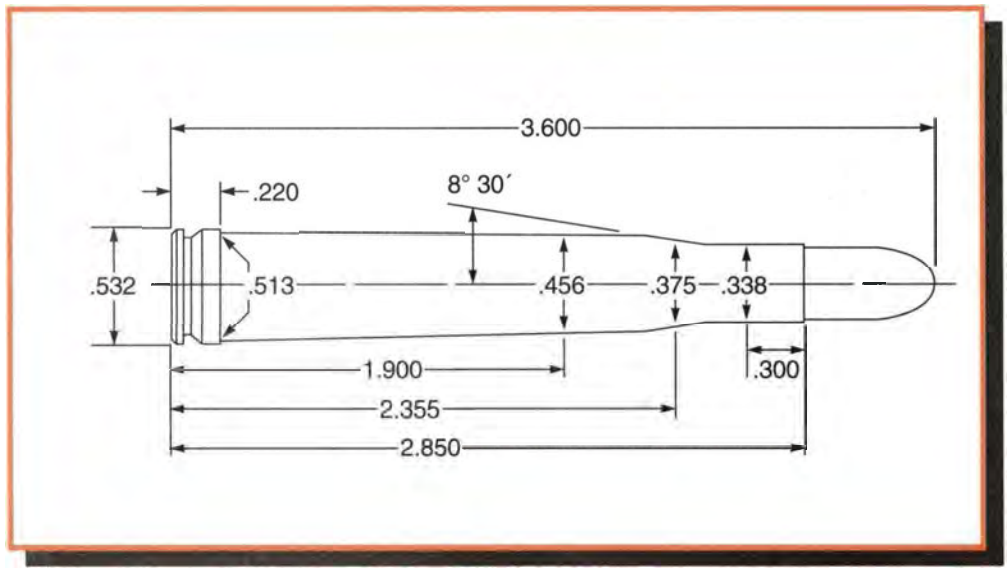


**Comments:**

The 300 Holland and Holland is the grandfather of the modern belted 30-caliber Magnums. In contrast to the later 300 Winchester and 300 Weatherby, this cartridge requires the belt for proper headspacing due to its long, sloping shape. Holland and Holland introduced their "Super 30" in the early 1920s. Its availability via only expensive imported or custom rifles limited its access to the average American hunter. The 300 H&H came to prominence in America when Ben Comfort won the 1000-yard stage of the National Matches in 1935. Winchester offered the chambering two years later in a Magnum-length Model 70. American shooters now had a reasonably priced 30-caliber Magnum rifle. The 300 H&H is suitable for most North American hunting and has seen extensive use on the African plains. It is still a potent cartridge but has been overtaken by later developments. The current generation of premium bullets are well suited to the performance levels of the H&H. IMR-4350 and IMR-4831 produced the best results in our tests.

**Test Components:**

Cases . . . . . .Winchester
Trim-to Length . . . . . .2.840"
Primers . . . . . .WLR
Primer Size . . . . . .Large Rifle
Lyman Shell Holder . . . . . .No. 13
Jacketed Bullets Used . . . . . .Sierra HP #2110, 110 gr.
Hornady SP #3020, 130 gr.
Hornady SP #3031, 150 gr.
Nosler Ballistic Tip #30165, 165 gr.
Nosler Ballistic Tip #30180, 180 gr.
Nosler SP #35626, 200 gr.
Hornady RN #3090, 220 gr.
Cast Bullets Used . . . . . .(sized to .309" dia)
*gas check bullet *#311291, 170 gr.

**Test Specifications:**
**(Velocity Only)**

Firearm Used . . . . . .Remington Model 721
Barrel Length . . . . . .26"
Twist . . . . . .1-10"
Groove Dia. . . . . .308"

**110 gr. Jacketed HP** — 3.600" OAL — **BC:** .177 **SD:** .166

| Powder | Sugg Starting Grains | Velocity fps | Pressure | Max Load Grains | Velocity fps | Pressure |
|---|---|---|---|---|---|---|
| IMR-4064 | 61.0 | 3322 | — | 68.0 | 3708 | — |
| 760 | 64.0 | 2891 | — | 71.0 | 3485 | — |
| IMR-4350 | 68.0 | 3047 | — | 76.0 | 3445 | — |
| RX19 | 71.0 | 3045 | — | 79.0 | 3473 | — |
| IMR-4831 | 70.5 | 3033 | — | 78.5 | 3488 | — |
| XMR-3100 | 71.0 | 2954 | — | 79.0 | 3491 | — |
| H-4831 | 73.0 | 3134 | — | 80.0+ | 3401 | — |

**130 gr. Jacketed SP** — 3.600" OAL — **BC:** .295 **SD:** .196

| Powder | Sugg Starting Grains | Velocity fps | Pressure | Max Load Grains | Velocity fps | Pressure |
|---|---|---|---|---|---|---|
| IMR-4064 | 60.0 | 3164 | — | 67.0 | 3497 | — |
| 760 | 62.0 | 2814 | — | 69.0 | 3346 | — |
| IMR-4350 | 65.0 | 2954 | — | 72.0 | 3372 | — |
| **RX19** | 67.5 | 2936 | — | **75.0** | **3370** | — |
| IMR-4831 | 66.5 | 2923 | — | 74.0 | 3392 | — |
| XMR-3100 | 70.0 | 2953 | — | 78.0 | 3396 | — |
| H-4831 | 73.0 | 3058 | — | 80.0+ | 3333 | — |

**Note:** Loads shown in shaded panels are maximum.
Loads shown in bold designate potentially most accurate load.
\+ Designates a compressed powder charge.

# 300 H & H Magnum (300 Holland & Holland) (7.63 x 72mm)

**150 gr. Jacketed SP** — 3.600" OAL — **BC:** .338 **SD:** .226

| Powder | Sugg Starting Grains | Velocity fps | Pressure | Max Load Grains | Velocity fps | Pressure |
|---|---|---|---|---|---|---|
| IMR-4064 | 59.0 | 3012 | — | 65.0 | 3268 | — |
| 760 | 61.0 | 2633 | — | 68.0 | 3146 | — |
| **IMR-4350** | 63.0 | 2799 | — | **70.0** | **3169** | — |
| RX19 | 65.0 | 2779 | — | 72.5 | 3189 | — |
| IMR-4831 | 65.0 | 2809 | — | 72.0 | 3218 | — |
| XMR-3100 | 68.5 | 2792 | — | 76.0 | 3217 | — |
| H-4831 | 72.0 | 2923 | — | 80.0+ | 3236 | — |

**165 gr. Jacketed Ballistic Tip** — 3.600" OAL — **BC:** .475 **SD:** .248

| Powder | Sugg Starting Grains | Velocity fps | Pressure | Max Load Grains | Velocity fps | Pressure |
|---|---|---|---|---|---|---|
| 760 | 60.0 | 2720 | — | 66.5 | 3073 | — |
| IMR-4350 | 62.0 | 2783 | — | 69.0 | 3135 | — |
| RX19 | 64.0 | 2765 | — | 71.0 | 3123 | — |
| **IMR-4831** | 63.5 | 2752 | — | **70.5** | **3131** | — |
| XMR-3100 | 67.5 | 2818 | — | 75.0 | 3157 | — |
| H-4831 | 70.0 | 2793 | — | 77.0+ | 3095 | — |

**180 gr. Jacketed Ballistic Tip** — 3.600" OAL — **BC:** .507 **SD:** .271

| Powder | Sugg Starting Grains | Velocity fps | Pressure | Max Load Grains | Velocity fps | Pressure |
|---|---|---|---|---|---|---|
| 760 | 58.5 | 2611 | — | 65.0 | 2972 | — |
| IMR-4350 | 60.0 | 2680 | — | 67.0 | 3025 | — |
| **IMR-4831** | 62.0 | 2688 | — | **69.0** | **3051** | — |
| XMR-3100 | 65.0 | 2697 | — | 72.5 | 3011 | — |
| H-4831 | 66.0 | 2624 | — | 73.0+ | 2949 | — |
| RX22 | 64.0 | 2613 | — | 71.0 | 2955 | — |

**200 gr. Jacketed Spitzer** — 3.600" OAL — **BC:** .481 **SD:** .381

| Powder | Sugg Starting Grains | Velocity fps | Pressure | Max Load Grains | Velocity fps | Pressure |
|---|---|---|---|---|---|---|
| IMR-4350 | 59.0 | 2538 | — | 65.0 | 2808 | — |
| IMR-4831 | 60.0 | 2557 | — | 67.0 | 2862 | — |
| XMR-3100 | 61.0 | 2443 | — | 68.0 | 2767 | — |
| H-4831 | 64.0 | 2506 | — | 71.0 | 2801 | — |
| RX22 | 62.0 | 2522 | — | 69.0 | 2793 | — |
| **RX25** | 66.0 | 2694 | — | **73.5** | **2984** | — |

**220 gr. Jacketed RN** — 3.600" OAL — **BC:** .300 **SD:** .331

| Powder | Sugg Starting Grains | Velocity fps | Pressure | Max Load Grains | Velocity fps | Pressure |
|---|---|---|---|---|---|---|
| IMR-4350 | 57.0 | 2450 | — | 64.0 | 2732 | — |
| IMR-4831 | 58.5 | 2404 | — | 65.0 | 2663 | — |
| XMR-3100 | 58.0 | 2233 | — | 64.0 | 2473 | — |
| H-4831 | 62.0 | 2398 | — | 69.0 | 2710 | — |
| RX22 | 60.0 | 2366 | — | 67.0 | 2611 | — |
| **RX25** | 66.0 | 2570 | — | **73.0** | **2876** | — |

**#311291** — 170 gr. (#2 Alloy) 3.335" OAL — **BC:** .202 **SD:** .256

| Powder | Sugg Starting Grains | Velocity fps | Pressure | Max Load Grains | Velocity fps | Pressure |
|---|---|---|---|---|---|---|
| SR-4759 | 27.0 | 1949 | — | 32.5 | 2185 | — |
| XMP-5744 | 29.0 | 1905 | — | 34.0 | 2157 | — |
| RX7 | 28.0 | 1801 | — | 36.2 | 2130 | — |

**Note:** Loads shown in shaded panels are maximum.
Loads shown in bold designate potentially most accurate load.
\+ Designates a compressed powder charge.

# 300 Remington Short Action Ultra Mag (SAUM)

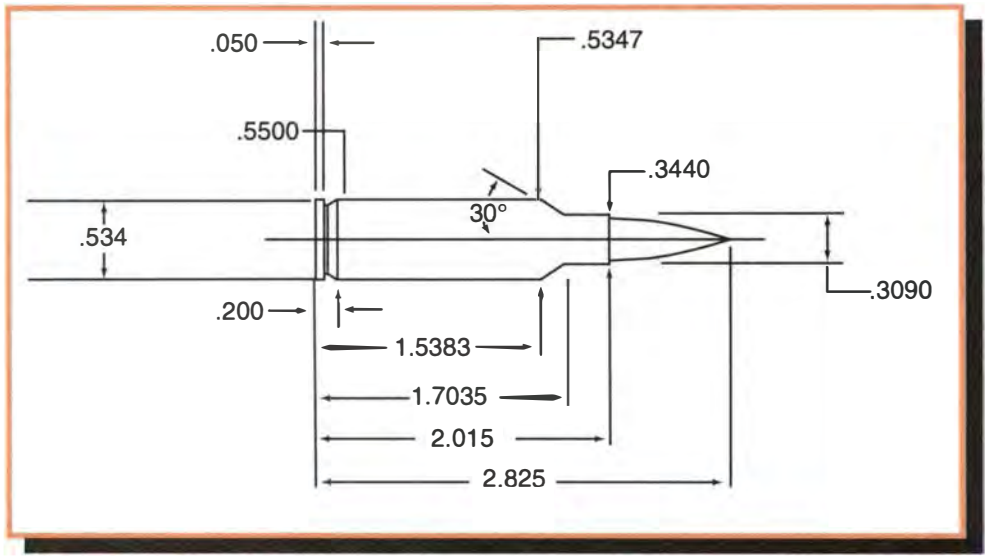


**Comments:**

Remington introduced their own concept of a rebated rim Short Magnum in 2002 as a short action adaptation of the popular Ultra Mag series. This was not however their first experience with short magnums. Remington first offered their belted 350 and 6.5mm Remington Magnums in the short action Model 600 rifle back in the mid-sixties. Neither cartridge enjoyed significant commercial success and both are long discontinued. Case length of the 300 SAUM is .085" shorter than the 300 WSM with a gentler 30-degree shoulder set approximately .125" farther back. The SAUM family of cartridges shares the appearance of the PPC with its short, fat disposition of powder. Factory specifications average around 150 to 200 feet per second over the 30-06 while using seven to eight percent more powder. Tests in Lyman's ballistic lab showed the 300 SAUM to average only around 30 to 50 feet below Winchester's short 300 while using three to four percent less powder. All propellants listed displayed fairly uniform ballistics throughout with IMR-4350, Reloder 19, Reloder 22, and the various VihtaVuori powders giving particularly consistent results. Cast bullets were selected for their capability to seat properly in the case while remaining within the maximum overall length. IMR-4198 and H4895 provided the most consistent results during cast bullet testing.

**Test Components:**

Cases . . . . . .Remington
Trim-to Length . . . . . .2.005"
Primers . . . . . .Remington 9½ M & 9½
Primer Size . . . . . .Large Rifle, Magnum & Standard
Lyman Shell Holder . . . . . .No. 13
Jacketed Bullets Used . . . . . .Swift Scirocco, 150 gr.
Swift Scirocco, 165 gr.
Nosler Ballistic Tip, #30180, 180 gr.
Nosler Partition, #35626, 200 gr.
Cast Bullets Used . . . . . .(sized to .309" dia)
*gas check bullet *#311672, 160 gr.
*#311644, 190 gr.

**Test Specifications: (Velocity & Pressure)**

Firearm Used . . . . . .Universal Receiver
Barrel Length . . . . . .24"
Twist . . . . . .1-10"
Groove Dia. . . . . .308"

**150 gr. Jacketed Scirocco** — 2.800" OAL — **BC:** .430 **SD:** .226

| Powder | Sugg Starting Grains | Velocity fps | Pressure P.S.I. | Max Load Grains | Velocity fps | Pressure P.S.I. |
|---|---|---|---|---|---|---|
| H414 | 61.5 | 3039 | 56,600 | 65.0+ | 3183 | 63,700 |
| IMR-4350 | 61.5 | 2965 | 54,500 | 65.0+ | 3152 | 63,300 |
| XMR-4350 | 62.5 | 2956 | 51,400 | 66.0+ | 3137 | 59,500 |
| N 160 | 64.5 | 3070 | 56,300 | 68.0+ | 3217 | 63,700 |
| **RX19** | 65.0 | 2930 | 53,400 | **68.5+** | **3098** | **60,900** |
| MAGPRO | 71.0 | 2944 | 52,900 | 75.0+ | 3146 | 61,800 |

**165 gr. Jacketed Scirocco** — 2.800" OAL — **BC:** .470 **SD:** .248

| Powder | Sugg Starting Grains | Velocity fps | Pressure P.S.I. | Max Load Grains | Velocity fps | Pressure P.S.I. |
|---|---|---|---|---|---|---|
| H414 | 58.5 | 2862 | 54,300 | 61.5 | 3025 | 62,700 |
| IMR-4350 | 60.0 | 2870 | 57,200 | 63.0+ | 3002 | 62,800 |
| **XMR-4350** | 60.0 | 2852 | 53,600 | **63.3+** | **3004** | **60,700** |
| N160 | 62.0 | 2922 | 56,500 | 65.5+ | 3042 | 62,600 |
| IMR-4831 | 61.0 | 2857 | 56,000 | 64.5+ | 3006 | 63,100 |
| RX19 | 63.0 | 2841 | 54,500 | 66.5+ | 3015 | 62,600 |
| WXR | 64.0 | 2816 | 54,000 | 67.5+ | 2996 | 62,900 |
| RX22 | 65.5 | 2976 | 56,000 | 69.0+ | 3136 | 63,900 |
| MAGPRO | 70.0 | 2868 | 53,700 | 74.0+ | 3037 | 62,500 |

**Note:** Loads shown in shaded panels are maximum.
Loads shown in bold designate potentially most accurate load.
+ Designates a compressed powder charge.

# 300 Remington Short Action Ultra Mag (SAUM)

**180 gr. Jacketed Ballistic Tip** — **BC:** .507 **SD:** .271
2.800" OAL

| Powder | Sugg Starting Grains | Velocity fps | Pressure P.S.I. | Max Load Grains | Velocity fps | Pressure P.S.I. |
|---|---|---|---|---|---|---|
| H414 | 58.0 | 2743 | 52,900 | 61.0 | 2932 | 64,300 |
| IMR-4350 | 59.0 | 2778 | 57,300 | 62.0 | 2902 | 63,200 |
| XMR-4350 | 60.5 | 2808 | 55,800 | 64.0+ | 2942 | 62,700 |
| N160 | 61.0 | 2807 | 56,400 | 64.5+ | 2938 | 63,300 |
| N560 | 63.5 | 2776 | 56,100 | 67.0+ | 2927 | 63,700 |
| RX19 | 63.0 | 2747 | 54,500 | 66.5+ | 2919 | 63,200 |
| IMR-4831 | 61.0 | 2761 | 55,500 | 64.5+ | 2931 | 64,000 |
| **RX22** | 63.5 | 2767 | 51,400 | **67.0+** | **2938** | **59,400** |
| WXR | 64.0 | 2731 | 54,400 | 67.5+ | 2904 | 63,200 |
| N165 | 64.5 | 2649 | 45,300 | 68.0+ | 2829 | 53,300 |
| MAGPRO | 69.0 | 2802 | 53,600 | 73.0+ | 2945 | 60,100 |

**200 gr. Jacketed SP** — **BC:** .481 **SD:** .301
2.825" OAL

| Powder | Sugg Starting Grains | Velocity fps | Pressure P.S.I. | Max Load Grains | Velocity fps | Pressure P.S.I. |
|---|---|---|---|---|---|---|
| H414 | 56.5 | 2648 | 57,400 | 59.5 | 2785 | 63,700 |
| N560 | 60.0 | 2595 | 53,500 | 63.5 | 2762 | 62,400 |
| RX19 | 60.5 | 2651 | 56,000 | 64.0+ | 2794 | 64,000 |
| IMR-4831 | 59.0 | 2636 | 55,100 | 62.0+ | 2787 | 62,900 |
| **RX22** | 61.0 | 2710 | 56,600 | **64.5+** | **2846** | **63,700** |
| WXR | 61.5 | 2654 | 56,500 | 65.0+ | 2798 | 63,900 |
| H-4831 | 62.5 | 2666 | 59,200 | 66.0+ | 2774 | 63,700 |
| IMR-7828 | 61.5 | 2611 | 54,300 | 65.0+ | 2770 | 62,600 |
| MAGPRO | 68.5 | 2789 | 57,900 | 72.0+ | 2886 | 62,400 |

***#311672** — **BC:** .245 **SD:** .239
160 gr. (#2 Alloy) 2.650" OAL

| Powder | Sugg Starting Grains | Velocity fps | Pressure P.S.I. | Max Load Grains | Velocity fps | Pressure P.S.I. |
|---|---|---|---|---|---|---|
| SR-4759 | 21.5 | 1729 | 25,500 | 27.5 | 2099 | 36,900 |
| XMP-5744 | 23.0 | 1708 | 24,800 | 30.0 | 2101 | 33,000 |
| IMR-4227 | 23.5 | 1736 | 24,900 | 30.0 | 2105 | 33,700 |
| IMR-4198 | 24.0 | 1701 | 22,900 | 31.0 | 2117 | 31,100 |
| RX7 | 25.0 | 1728 | 23,500 | 32.5 | 2115 | 32,500 |
| **H-4895** | 32.5 | 1690 | 21,800 | **40.0** | **2089** | **29,300** |

***#311644** — **BC:** .272 **SD:** .286
190 gr. (#2 Alloy) 2.775" OAL

| Powder | Sugg Starting Grains | Velocity fps | Pressure P.S.I. | Max Load Grains | Velocity fps | Pressure P.S.I. |
|---|---|---|---|---|---|---|
| SR-4759 | 20.5 | 1692 | 30,200 | 29.0 | 2113 | 48,700 |
| XMP-5744 | 23.5 | 1708 | 27,600 | 31.0 | 2099 | 38,700 |
| IMR-4227 | 23.0 | 1710 | 27,800 | 31.5 | 2120 | 42,200 |
| **IMR-4198** | 24.0 | 1705 | 26,300 | **32.0** | **2095** | **37,000** |
| RX7 | 24.0 | 1668 | 26,100 | 32.5 | 2100 | 37,900 |
| H-4895 | 30.0 | 1704 | 25,500 | 38.5 | 2101 | 33,400 |

**Note:** Loads shown in shaded panels are maximum.
Loads shown in bold designate potentially most accurate load.
\+ Designates a compressed powder charge.
* Designates the use of Remington 9½ primers.

# 300 WSM (Winchester Short Magnum)

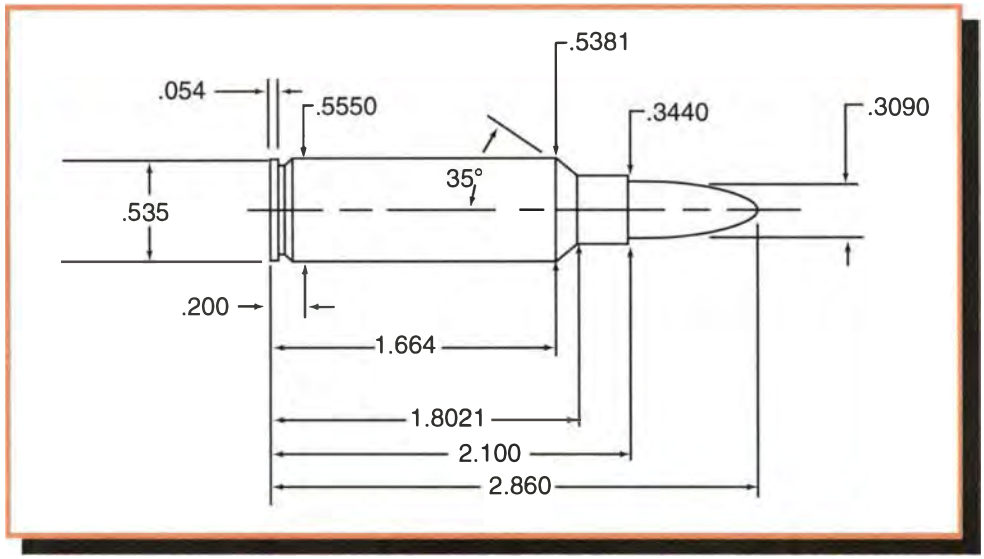


**Comments:**

Winchester launched their Short Magnum line of cartridges with the 300 WSM in 2001. The 300 WSM is Winchester's first completely new cartridge to come along in quite a few years as well as their first non-belted magnum. The appearance of the WSM is very similar to the PPC series of cartridges and features a slightly rebated rim. Benchrest shooters discovered long ago the inherent accuracy advantages of short, stubby cartridges. Many shooters report outstanding accuracy with this cartridge as well as lower perceived recoil. The absence of the belt found on traditional magnum cartridges offer smooth feeding and more positive head spacing. Its 2.100" case length, 35-degree shoulder, and pressure limit of 65,000 psi are designed to offer magnum level performance in a short action rifle.

Ballistics of the 300 WSM averaged 30 to 50 feet per second below the full-sized 300 Winchester Magnum while consuming around eight to ten percent less powder in our lab tests. Powders in the medium to slow burning range such as H-414, IMR-4350, and Reloder 19 all produced very good results. Cast bullets listed in the data section can be seated to within the maximum overall length while keeping the lube grooves and gas check contained within the neck. In addition to the listed accuracy loads, SR-4759 and Reloder 7 provided good results with cast bullet #311672. XMP-5744 and H-4895 worked well with cast bullet #311332. Initial public response has been quite positive and this cartridge will surely keep the wildcatters busy for years to come.

**Test Components:**

Cases . . . . . .Winchester
Trim-to Length . . . . . .2.090"
Primers . . . . . .Winchester WLRM and WLR
Primer Size . . . . . .Large Rifle Magnum and Standard
Lyman Shell Holder . . . . . .No. 34
Jacketed Bullets Used . . . . . .Swift Scirocco, 150 gr.
Nosler Ballistic Tip #30165, 165 gr.
Swift Scirocco, 180 gr.
Sierra HPBT #2210, 190 gr.
Nosler Partition #35626, 200 gr.
Sierra HPBT #2230, 200 gr.
Cast Bullets Used . . . . . .(sized to .309" dia)
*gas check bullet *#311672, 160 gr.
*#311332, 180 gr.

**Test Specifications:**
**(Velocity & Pressure)**

Firearm Used . . . . . .Universal Receiver
Barrel Length . . . . . .24"
Twist . . . . . .1-10"
Groove Dia. . . . . .308"

**150 gr. Jacketed Scirocco**
2.850" OAL
**BC:** .430
**SD:** .266

| Powder | Sugg Starting Grains | Velocity fps | Pressure P.S.I. | Max Load Grains | Velocity fps | Pressure P.S.I. |
|---|---|---|---|---|---|---|
| H-380 | 59.5 | 2895 | 48,600 | 66.0 | 3152 | 60,600 |
| 760 | 59.5 | 2903 | 48,400 | 66.0 | 3211 | 63,000 |
| H-414 | 61.0 | 2873 | 44,600 | 67.5 | 3223 | 62,600 |
| **N160** | 63.0 | 2916 | 46,400 | **70.0** | **3247** | **62,800** |
| IMR-4350 | 61.0 | 2807 | 44,000 | 67.5 | 3193 | 62,400 |
| XMR-4350 | 61.0 | 2831 | 43,300 | 68.0 | 3198 | 60,800 |
| RX19 | 63.0 | 2838 | 45,600 | 70.0 | 3169 | 60,200 |
| WXR | 64.0 | 2819 | 45,300 | 71.0+ | 3176 | 61,100 |
| Magpro | 72.0 | 2888 | 43,800 | 80.0+ | 3210 | 56,700 |

**Note:** Loads shown in shaded panels are maximum.
Loads shown in bold designate potentially most accurate load.
+ Designates a compressed powder charge.

# 300 WSM (Winchester Short Magnum)

### 165 gr. Jacketed Ballistic Tip
2.850" OAL

BC: .475
SD: .248

| Powder | Sugg Starting Grains | Velocity fps | Pressure P.S.I. | Max Load Grains | Velocity fps | Pressure P.S.I. |
|---|---|---|---|---|---|---|
| 760 | 59.0 | 2812 | 49,800 | 65.5 | 3067 | 61,400 |
| H-414 | 58.0 | 2822 | 51,700 | 64.7 | 3045 | 60,800 |
| IMR-4350 | 59.0 | 2684 | 44,200 | 65.5 | 3049 | 62,500 |
| **XMR-4350** | 60.0 | 2730 | 44,500 | **66.5** | **3053** | **60,900** |
| N160 | 61.5 | 2785 | 47,800 | 68.2 | 3073 | 61,600 |
| RX19 | 62.0 | 2688 | 43,800 | 68.5 | 3046 | 60,900 |
| IMR-4831 | 62.0 | 2688 | 45,000 | 68.7 | 3016 | 61,200 |
| WXR | 63.0 | 2740 | 45,800 | 70.0+ | 3055 | 61,600 |
| H-4831 | 65.0 | 2775 | 49,700 | 72.0+ | 3024 | 62,400 |
| Magpro | 71.0 | 2821 | 44,100 | 79.0+ | 3103 | 55,800 |

### 190 gr. Jacketed HPBT
2.860" OAL

BC: .533
SD: .286

| Powder | Sugg Starting Grains | Velocity fps | Pressure P.S.I. | Max Load Grains | Velocity fps | Pressure P.S.I. |
|---|---|---|---|---|---|---|
| 760 | 56.5 | 2630 | 50,500 | 62.7 | 2864 | 62,600 |
| H-414 | 55.0 | 2610 | 50,200 | 61.0 | 2844 | 62,800 |
| IMR-4350 | 56.0 | 2574 | 46,300 | 62.5 | 2859 | 61,600 |
| XMR-4350 | 57.0 | 2582 | 46,300 | 63.5 | 2858 | 61,300 |
| N160 | 57.0 | 2611 | 49,400 | 63.5 | 2851 | 62,500 |
| RX19 | 61.0 | 2609 | 47,300 | 67.5 | 2904 | 62,800 |
| IMR-4831 | 59.0 | 2536 | 45,300 | 65.5 | 2865 | 63,200 |
| WXR | 60.5 | 2576 | 45,100 | 67.0 | 2879 | 61,500 |
| H-4831 | 60.0 | 2541 | 46,300 | 66.5 | 2822 | 62,900 |
| N165 | 62.0 | 2592 | 44,600 | 69.0+ | 2861 | 58,700 |
| **RX22** | 60.5 | 2692 | 50,000 | **67.0** | **2947** | **63,800** |
| Magpro | 67.5 | 2665 | 44,800 | 75.0+ | 2968 | 60,400 |

### 200 gr. Jacketed HPBT
2.860" OAL

BC: .565
SD: .301

| Powder | Sugg Starting Grains | Velocity fps | Pressure P.S.I. | Max Load Grains | Velocity fps | Pressure P.S.I. |
|---|---|---|---|---|---|---|
| 760 | 55.5 | 2561 | 51,100 | 61.5 | 2782 | 62,000 |
| IMR-4350 | 55.5 | 2520 | 47,500 | 61.5 | 2783 | 62,300 |
| XMR-4350 | 57.0 | 2549 | 48,600 | 63.0 | 2813 | 63,000 |
| WXR | 60.0 | 2576 | 49,100 | 66.5 | 2839 | 63,500 |
| **RX22** | 58.5 | 2631 | 52,100 | **65.0** | **2842** | **62,800** |
| N165 | 62.0 | 2603 | 51,100 | 68.5+ | 2821 | 61,400 |

### *#311332
180 gr. (#2 Alloy) 2.850" OAL

BC: .320
SD: .271

| Powder | Sugg Starting Grains | Velocity fps | Pressure P.S.I. | Max Load Grains | Velocity fps | Pressure P.S.I. |
|---|---|---|---|---|---|---|
| **SR-4759** | **23.5** | **1804** | **25,600** | 33.0 | 2241 | 45,500 |
| XMP-5744 | 26.5 | 1792 | 22,500 | 36.0 | 2245 | 36,100 |
| IMR-4198 | 27.0 | 1823 | 22,000 | 37.0 | 2248 | 36,600 |
| N133 | 31.5 | 1794 | 19,200 | 41.0 | 2251 | 34,700 |
| RX7 | 28.0 | 1822 | 21,300 | 37.0 | 2247 | 36,600 |
| H-4895 | 34.0 | 1818 | 19,900 | 43.5 | 2234 | 30,200 |

### 180 gr. Jacketed Scirocco
2.860" OAL

BC: .520
SD: .271

| Powder | Sugg Starting Grains | Velocity fps | Pressure P.S.I. | Max Load Grains | Velocity fps | Pressure P.S.I. |
|---|---|---|---|---|---|---|
| 760 | 57.0 | 2670 | 49,900 | 63.2 | 2937 | 63,100 |
| H-414 | 56.0 | 2665 | 49,800 | 62.0 | 2931 | 62,200 |
| IMR-4350 | 58.0 | 2632 | 47,600 | 64.2 | 2921 | 62,900 |
| XMR-4350 | 57.5 | 2606 | 45,000 | 64.0 | 2916 | 63,200 |
| N160 | 57.5 | 2611 | 46,600 | 64.0 | 2880 | 62,500 |
| RX19 | 61.5 | 2664 | 50,100 | 68.2 | 2952 | 63,800 |
| IMR-4831 | 60.0 | 2599 | 47,800 | 66.7 | 2902 | 63,000 |
| WXR | 61.0 | 2671 | 49,500 | 68.0 | 2945 | 63,600 |
| H-4831 | 62.0 | 2579 | 46,100 | 68.0+ | 2865 | 62,300 |
| **N165** | 63.0 | 2650 | 46,000 | **70.0+** | **2936** | **60,500** |
| RX22 | 61.0 | 2697 | 48,900 | 67.0 | 2978 | 62,700 |
| Magpro | 68.0 | 2630 | 41,600 | 75.5+ | 2907 | 52,600 |

### 200 gr. Jacketed SP
2.860" OAL

BC: .481
SD: .301

| Powder | Sugg Starting Grains | Velocity fps | Pressure P.S.I. | Max Load Grains | Velocity fps | Pressure P.S.I. |
|---|---|---|---|---|---|---|
| 760 | 55.0 | 2523 | 50,500 | 61.0 | 2753 | 62,400 |
| H-414 | 55.5 | 2534 | 52,500 | 61.5 | 2757 | 62,900 |
| IMR-4350 | 55.0 | 2488 | 47,300 | 61.0 | 2734 | 61,200 |
| XMR-4350 | 57.0 | 2529 | 48,600 | 63.0 | 2775 | 61,900 |
| **N160** | 57.0 | 2537 | 51,600 | **63.0** | **2763** | **63,500** |
| RX19 | 60.0 | 2565 | 48,300 | 67.0 | 2826 | 63,300 |
| IMR-4831 | 58.0 | 2445 | 45,300 | 64.0 | 2740 | 61,600 |
| WXR | 60.0 | 2542 | 48,700 | 66.0 | 2783 | 61,100 |
| H-4831 | 58.5 | 2493 | 48,800 | 65.0 | 2719 | 62,300 |
| N165 | 62.0 | 2539 | 48,400 | 68.0 | 2805 | 62,400 |
| RX22 | 58.5 | 2590 | 50,100 | 65.0 | 2822 | 62,500 |
| Magpro | 67.5 | 2587 | 45,600 | 74.0+ | 2855 | 58,900 |

### *#311672
160 gr. (#2 Alloy) 2.725" OAL

BC: .245
SD: .240

| Powder | Sugg Starting Grains | Velocity fps | Pressure P.S.I. | Max Load Grains | Velocity fps | Pressure P.S.I. |
|---|---|---|---|---|---|---|
| SR-4759 | 21.5 | 1800 | 22,900 | 30.2 | 2250 | 40,300 |
| **XMR-5744** | **25.0** | **1782** | **20,100** | 34.3 | 2242 | 31,000 |
| IMR-4198 | 25.5 | 1824 | 19,100 | 35.0 | 2263 | 31,200 |
| N133 | 30.0 | 1791 | 16,800 | 39.0 | 2251 | 28,600 |
| RX7 | 26.0 | 1805 | 19,100 | 36.0 | 2252 | 31,600 |
| H4895 | 33.0 | 1806 | 17,000 | 42.5 | 2258 | 27,200 |

**Note:** Loads shown in shaded panels are maximum.
Loads shown in bold designate potentially most accurate load.
+ Designates a compressed powder charge.
* Designates the use of Win. WLR primers.

# 300 Winchester Magnum

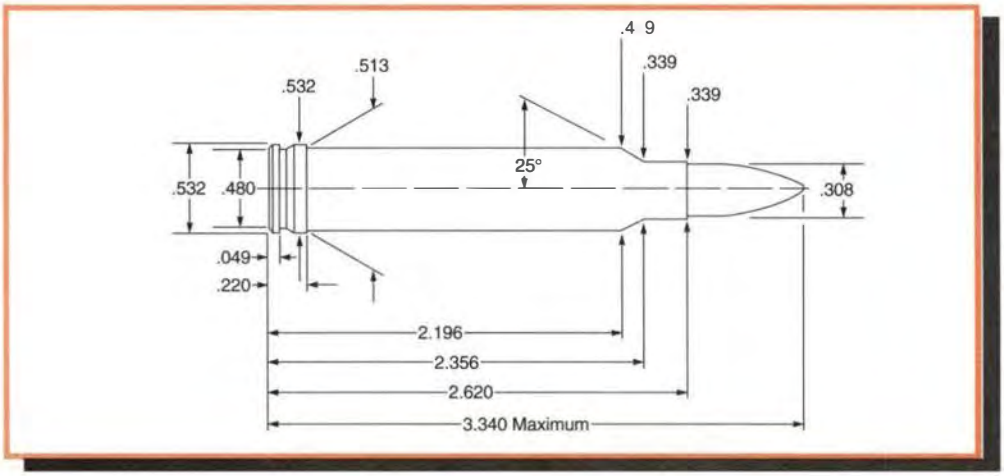


**Comments:**

This cartridge will duplicate the ballistics of the 300 H&H Magnum. Its main advantage is that it will work in a standard length action whereas the H&H round requires a magnum length action.

This cartridge tends to give the best results with Winchester primers. Our data was developed using the standard Winchester primer and the use of a magnum primer will cause a pressure increase. When using magnum type primers work up loads cautiously and stay at least one grain below the maximum listed loads.

Favored powders should be Hodgdon H4831 and IMR 7828. Strongly constructed bullets of 180 to 220 grains usually give the best balance of internal ballistic uniformity and accuracy

**Test Components:**

Cases . . . . . .Winchester
Trim-to Length . . . . . .2.610"
Primers . . . . . .Winchester WLR
Primer Size . . . . . .Large Rifle
Lyman Shell Holder . . . . . .No. 13
Jacketed Bullets Used . . . .Hornady SP #3020, 130 gr.
Hornady SP #3031, 150 gr.
Nosler Partition #16330, 165 gr.
Sierra HPBT #2220, 180 gr.
Barnes X #30835, 180 gr.
Sierra HPBT #2210, 190 gr.
Sierra HPBT #2230, 200 gr.
Hornady RN #3090, 220 gr.
Cast Bullets Used . . . . . .(sized to .309" dia)
*gas check bullet *#311672, 160 gr.
*#311291, 170 gr.
*#311644, 190 gr.

**Test Specifications: (Velocity & Pressure)**

Firearm Used . . . . . .Universal Receiver and Winchester Model 70
Barrel Length . . . . . .24"
Twist . . . . . .1-10"
Groove Dia. . . . . .308"

**130 gr. Jacketed SP** — 3.215" OAL — **BC:** .295 **SD:** .196

| Powder | Sugg Starting Grains | Velocity fps | Pressure | Max Load Grains | Velocity fps | Pressure |
|---|---|---|---|---|---|---|
| Varget | 63.5 | 3176 | 49,300 | 70.0 | 3456 | 62,400 P |
| RX15 | 64.0 | 3169 | 48,200 | 70.0 | 3466 | 61,900 P |
| AA2700 | 67.5 | 3036 | 44,200 | 75.0 | 3401 | 61,800 P |
| 760 | 69.0 | 3209 | 50,200 | 75.0 | 3404 | 61,500 P |
| H414 | 66.0 | 3036 | 43,500 | 75.0 | 3381 | 53,000 C |
| **N160** | **73.0** | **3121** | **45,200** | 81.2+ | 3501 | 63,700 P |
| IMR-4350 | 71.0 | 3086 | — | 79.0+ | 3497 | — |
| XMR-3100 | 72.0 | 2871 | 38,100 | 80.0+ | 3290 | 56,300 P |
| IMR-4831 | 73.0 | 3039 | 41,300 | 81.0+ | 3485 | 60,000 P |
| H4831 | 75.0 | 2932 | — | 83.0+ | 3290 | — |

**150 gr. Jacketed SP** — 3.340" OAL — **BC:** .338 **SD:** .226

| Powder | Sugg Starting Grains | Velocity fps | Pressure | Max Load Grains | Velocity fps | Pressure |
|---|---|---|---|---|---|---|
| AA2700 | 63.5 | 2876 | 47,500 | 70.5 | 3159 | 61,300 P |
| 760 | 66.0 | 2958 | 51,300 | 71.0 | 3221 | 62,800 P |
| H-414 | 60.0 | 2800 | 43,000 | 68.5 | 3111 | 52,200 C |
| N160 | 69.0 | 2950 | 47,000 | 77.0 | 3275 | 63,500 P |
| IMR-4350 | 68.0 | 2890 | — | 76.0 | 3290 | — |
| RX19 | 70.0 | 2912 | 44,500 | 78.0 | 3285 | 62,700 P |
| **IMR-4831** | 69.0 | 2886 | 43,300 | **77.0** | **3299** | **63,300 P** |
| XMR-3100 | 70.0 | 2782 | 43,100 | 77.5+ | 3141 | 62,200 P |
| H-4831 | 73.0 | 2793 | — | 81.0+ | 3194 | — |
| RX22 | 74.0 | 2889 | 43,600 | 82.0+ | 3218 | 61,300 P |
| IMR7828 | 75.5 | 2944 | 38,600 | 81.0+ | 3268 | 52,500 C |

**Note:** Loads shown in shaded panels are maximum.
Loads shown in bold designate potentially most accurate load.
+ Designates a compressed powder charge.
In pressure column, C=Copper Units of Pressure(CUP); P=Pounds per Square Inch (PSI)

# 300 Winchester Magnum

**165 gr. Jacketed SP** — 3.340" OAL — **BC:** .410 **SD:** .248

| Powder | Sugg Starting Grains | Velocity fps | Pressure | Max Load Grains | Velocity fps | Pressure |
|---|---|---|---|---|---|---|
| H-414 | 60.0 | 2781 | 48,400 | 67.0 | 3059 | 63,300 P |
| **IMR-4350** | 67.0 | 2865 | — | **74.0** | **3194** | **—** |
| N560 | 71.0 | 2761 | 46,200 | 78.5+ | 3098 | 61,500 P |
| RX19 | 68.5 | 2795 | 45,300 | 76.0+ | 3111 | 61,800 P |
| IMR-4831 | 67.5 | 2807 | 44,200 | 75.0 | 3164 | 63,200 P |
| XMR-3100 | 68.0 | 2758 | 45,100 | 75.5+ | 3071 | 63,200 P |
| H-4831 | 71.0 | 2724 | — | 78.0+ | 3066 | — |
| WXR | 71.0 | 2838 | 45,900 | 78.5+ | 3059 | 63,100 P |
| RX22 | 72.5 | 2786 | 37,700 | 79.5+ | 3119 | 50,300 C |
| IMR-7828 | 74.0 | 2892 | 41,600 | 79.5+ | 3149 | 51,200 C |

**180 gr. Jacketed HPBT** — 3.340" OAL — **BC:** .475 **SD:** .271

| Powder | Sugg Starting Grains | Velocity fps | Pressure | Max Load Grains | Velocity fps | Pressure |
|---|---|---|---|---|---|---|
| IMR-4350 | 65.0 | 2724 | — | 72.5 | 3048 | — |
| RX19 | 68.0 | 2647 | 38,200 | 74.0 | 2962 | 49,700 C |
| IMR-4831 | 66.0 | 2674 | 43,700 | 73.0+ | 3035 | 63,000 P |
| XMR-3100 | 68.0 | 2562 | 37,200 | 75.5 | 2936 | 51,400 C |
| **N560** | 67.5 | 2668 | 43,600 | **75.0** | **3036** | **63,000 P** |
| H-4831 | 70.0 | 2666 | — | 76.0+ | 2938 | — |
| WXR | 69.0 | 2703 | 45,000 | 77.0+ | 3048 | 63,300 P |
| RX22 | 70.5 | 2696 | 37,800 | 77.0+ | 3017 | 50,300 C |
| IMR-7828 | 69.0 | 2596 | 42,000 | 76.0+ | 2894 | 58,000 P |
| RX25 | 73.0 | 2741 | 46,200 | 81.0+ | 3084 | 63,200 P |

**180 gr. Barnes X** — 3.340" OAL — **BC:** .511 **SD:** .271

| Powder | Sugg Starting Grains | Velocity fps | Pressure | Max Load Grains | Velocity fps | Pressure |
|---|---|---|---|---|---|---|
| IMR-4350 | 61.0 | 2509 | 36,700 | 68.0 | 2788 | 48,200 C |
| RX19 | 64.5 | 2587 | 37,000 | 72.5 | 2894 | 50,200 C |
| XMR-3100 | 64.0 | 2428 | 36,000 | 73.0 | 2794 | 50,600 C |
| N560 | 64.0 | 2616 | 48,500 | 71.0 | 2830 | 56,800 P |
| H-4831 | 64.0 | 2567 | 39,700 | 74.0 | 2832 | 50,100 C |
| RX22 | 64.0 | 2575 | 38,000 | 73.5 | 2928 | 51,300 C |
| IMR-7828 | 69.0 | 2685 | 53,500 | 76.5+ | 2907 | 63,000 P |
| RX25 | 70.0 | 2787 | 54,400 | 78.0+ | 3009 | 63,100 P |

**190 gr. Jacketed HPBT** — 3.340" OAL — **BC:** .533 **SD:** .286

| Powder | Sugg Starting Grains | Velocity fps | Pressure | Max Load Grains | Velocity fps | Pressure |
|---|---|---|---|---|---|---|
| IMR-4350 | 59.5 | 2583 | 42,800 | 68.0 | 2880 | 53,700 C |
| IMR-4831 | 65.0 | 2603 | 44,000 | 72.5 | 2936 | 62,500 P |
| N560 | 68.5 | 2599 | 45,100 | 75.0 | 2926 | 62,400 P |
| XMR-3100 | 67.5 | 2536 | 42,000 | 75.0+ | 2890 | 61,000 P |
| H-4831 | 64.0 | 2522 | 37,600 | 73.0 | 2897 | 52,800 C |
| WXR | 68.0 | 2633 | 46,800 | 75.5+ | 2933 | 62,500 P |
| RX22 | 69.0 | 2633 | 44,400 | 77.0+ | 2985 | 62,600 P |
| IMR-7828 | 69.0 | 2614 | 45,600 | 77.0+ | 2932 | 62,400 P |
| **RX25** | 72.0 | 2633 | 44,000 | **80.0+** | **2992** | **63,300 P** |
| H1000 | 76.0 | 2623 | 45,600 | 83.5+ | 2930 | 62,900 P |
| AA8700 | 78.0 | 2353 | 37,000 | 86.0+ | 2607 | 48,300 P |

**200 gr. Jacketed HPBT** — 3.340" OAL — **BC:** .565 **SD:** .301

| Powder | Sugg Starting Grains | Velocity fps | Pressure | Max Load Grains | Velocity fps | Pressure |
|---|---|---|---|---|---|---|
| IMR-4350 | 62.0 | 2597 | — | 69.0 | 2849 | — |
| IMR-4831 | 63.5 | 2569 | 44,800 | 70.5 | 2881 | 62,500 P |
| RX19 | 64.5 | 2480 | 35,600 | 73.0 | 2877 | 51,800 C |
| XMR-3100 | 64.0 | 2392 | 36,000 | 72.5 | 2751 | 51,000 C |
| H-4831 | 67.0 | 2531 | — | 74.0+ | 2816 | — |
| WXR | 67.0 | 2593 | 46,500 | 74.0 | 2893 | 62,900 P |
| RX22 | 65.0 | 2489 | 35,800 | 74.5+ | 2878 | 51,500 C |
| IMR-7828 | 67.0 | 2476 | 37,700 | 74.5+ | 2828 | 51,800 C |
| **RX25** | 71.0 | 2608 | 45,500 | **78.0+** | **2938** | **62,900 P** |
| H1000 | 70.0 | 2442 | 36,000 | 80.0+ | 2798 | 49,900 C |
| AA8700 | 74.0 | 2253 | 35,000 | 82.0+ | 2483 | 44,500 P |

**220 gr. Jacketed RN** — 3.340" OAL — **BC:** .300 **SD:** .331

| Powder | Sugg Starting Grains | Velocity fps | Pressure | Max Load Grains | Velocity fps | Pressure |
|---|---|---|---|---|---|---|
| IMR-4350 | 60.0 | 2463 | — | 67.5 | 2747 | — |
| **IMR-4831** | 63.0 | 2440 | 46,100 | **70.0** | **2705** | **62,600 P** |
| RX19 | 64.0 | 2415 | 37,000 | 72.0 | 2730 | 50,900 C |
| XMR-3100 | 62.5 | 2389 | 45,000 | 69.5 | 2674 | 62,600 P |
| H-4831 | 65.0 | 2415 | — | 72.0+ | 2688 | — |
| WXR | 65.0 | 2494 | 49,200 | 72.5+ | 2741 | 63,700 P |
| RX22 | 63.5 | 2374 | 36,700 | 72.5+ | 2717 | 51,400 C |
| IMR-7828 | 67.5 | 2445 | 45,000 | 71.0+ | 2747 | 63,300 P |
| RX25 | 69.0 | 2446 | 43,100 | 76.0+ | 2772 | 61,900 P |
| H1000 | 69.0 | 2337 | 36,800 | 78.0+ | 2653 | 49,400 C |
| AA8700 | 75.0 | 2278 | 38,300 | 83.0+ | 2552 | 51,300 P |
| H870 | 80.0 | 2460 | 44,000 | 84.0+ | 2641 | 51,400 P |

**Note:** Loads shown in shaded panels are maximum.
Loads shown in bold designate potentially most accurate load.
\+ Designates a compressed powder charge.
In pressure column, C=Copper Units of Pressure(CUP); P=Pounds per Square Inch (PSI)

# 300 Winchester Magnum

**#311672**
160 gr. (#2 Alloy) 3.200" OAL
**BC:** .245
**SD:** .240

| Powder | Sugg Starting Grains | Velocity fps | Pressure P.S.I. | Max Load Grains | Velocity fps | Pressure P.S.I. |
|---|---|---|---|---|---|---|
| Unique | 16.0 | 1621 | 21,700 | 28.0 | 2198 | 45,800 |
| **SR-4759** | **22.0** | **1661** | **15,600** | 38.5 | 2440 | 44,900 |
| XMP-5744 | 25.5 | 1673 | 14,700 | 42.5 | 2466 | 36,100 |
| RX7 | 28.0 | 1683 | 12,700 | 47.0 | 2427 | 33,800 |
| H-4895 | 31.0 | 1694 | 13,200 | 50.0 | 2438 | 31,400 |
| IMR-4831 | 40.0 | 1684 | 13,100 | 63.0 | 2386 | 27,000 |
| XMR-3100 | 40.0 | 1659 | 14,100 | 65.0 | 2381 | 28,200 |

**#311291**
170 gr. (#2 Alloy) 3.135" OAL
**BC:** .202
**SD:** .256

| Powder | Sugg Starting Grains | Velocity fps | Pressure | Max Load Grains | Velocity fps | Pressure |
|---|---|---|---|---|---|---|
| Unique | 18.0 | 1705 | 29,400 | 22.0 | 1910 | 38,600 C |
| SR-7625 | 15.0 | 1480 | 27,600 | 18.0 | 1650 | 36,000 C |
| SR-4759 | 30.5 | 2075 | 28,400 | 40.0 | 2472 | 50,900 C |
| **XMP-5744** | **26.0** | **1648** | **16,300** | 43.0 | 2415 | 40,000 P |
| RX7 | 37.0 | 2184 | 27,200 | 48.0 | 2575 | 46,100 C |
| H-4895 | 40.5 | 2157 | 25,900 | 56.0 | 2748 | 51,200 C |
| XMR-3100 | 39.5 | 1623 | 14,700 | 65.5 | 2398 | 34,000 P |

**#311644**
190 gr. (#2 Alloy) 3.405" OAL
**BC:** .272
**SD:** .286

| Powder | Sugg Starting Grains | Velocity fps | Pressure P.S.I. | Max Load Grains | Velocity fps | Pressure P.S.I. |
|---|---|---|---|---|---|---|
| Unique | 18.0 | 1609 | 27,200 | 30.0 | 2144 | 56,900 |
| SR-4759 | 23.0 | 1637 | 19,400 | 41.0 | 2367 | 56,100 |
| **XMP-5744** | **26.0** | **1641** | **17,400** | 44.0 | 2399 | 42,900 |
| RX7 | 28.0 | 1672 | 16,300 | 48.0 | 2373 | 41,900 |
| H-4895 | 32.0 | 1667 | 15,800 | 52.0 | 2391 | 38,300 |
| IMR-4064 | 32.0 | 1640 | 15,300 | 53.0 | 2434 | 39,000 |
| IMR-4831 | 40.0 | 1599 | 14,200 | 64.0 | 2444 | 35,200 |
| XMR-3100 | 44.0 | 1695 | 16,200 | 68.0 | 2467 | 39,600 |

**Note:** Loads shown in shaded panels are maximum.
Loads shown in bold designate potentially most accurate load.
+ Designates a compressed powder charge.
In pressure column, C=Copper Units of Pressure(CUP); P=Pounds per Square Inch (PSI)

# 300 Remington Ultra Mag

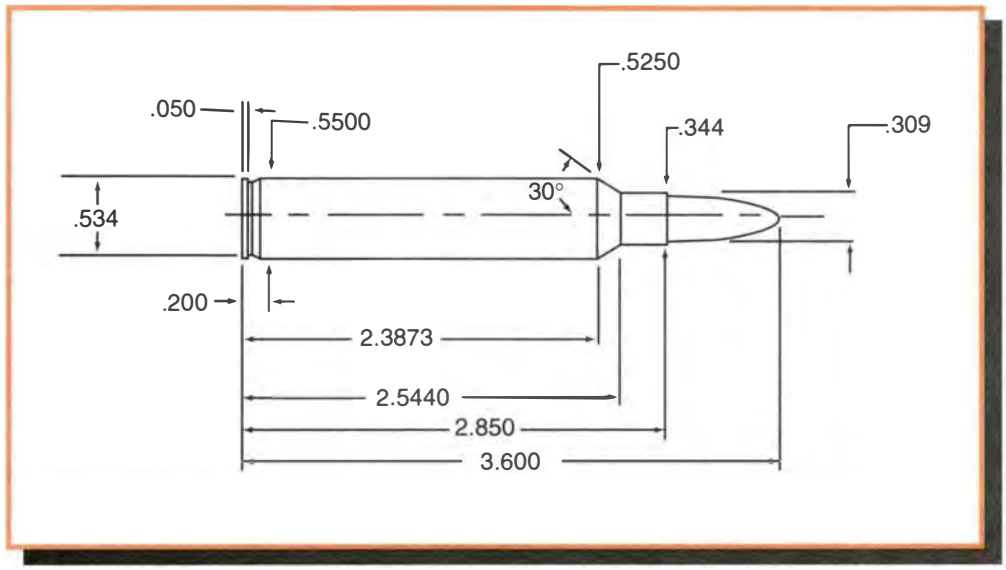


**Comments:**

Remington launched the Ultra Mag family with this, their first 30 caliber magnum in 1999. Remington broke with the long held magnum orthodoxy by basing the cartridge on the beltless 404 Jeffery case featuring a slightly rebated rim. The absence of the belt allows for increased capacity in comparison to the traditional belted Magnums while using the same diameter bolt face. Additional benefits include more positive headspacing and smoother feeding. Predictably, the new cartridge thrives on healthy charges of slow-burning powder and premium bullets. The 300 RUM is capable of some 200 feet per second over the 300 Winchester Magnum

**Test Components:**

Cases . . . . . .Remington
Trim-to Length . . . . . .2.840"
Primers . . . . . .Remington 9½ M and 9½
Primer Size . . . . . .Large Rifle, Magnum and Standard
Lyman Shell Holder . . . . . .No. 13
Jacketed Bullets Used . . .Barnes XLC #30854, 150 gr.
Nosler Ballistic Tip #30165, 165 gr.
Swift Scirocco, 180 gr.
Swift A-Frame, 200 gr.
Cast Bullets Used . . . . . .(sized to .309" dia)
*gas check bullet *#311644, 190 gr.

**Test Specifications:**
**(Velocity & Pressure)**

Firearm Used . . . . . .Universal Receiver
Barrel Length . . . . . .24"
Twist . . . . . .1-10"
Groove Dia. . . . . ..308"

**150 gr. Barnes XLC** — **BC:** .428 **SD:** .226
3.545" OAL

| Powder | Sugg Starting Grains | Velocity fps | Pressure P.S.I. | Max Load Grains | Velocity fps | Pressure P.S.I. |
|---|---|---|---|---|---|---|
| IMR-4831 | 86.0 | 3229 | 51,500 | 91.0 | 3476 | 63,900 |
| WXR | 89.0 | 3267 | 55,200 | 94.0 | 3422 | 63,100 |
| XMR-3100 | 89.0 | 3143 | 51,000 | 94.0 | 3393 | 63,300 |
| H-4831 | 89.0 | 3133 | 51,500 | 94.0 | 3348 | 62,600 |
| **RX22** | **91.0** | **3201** | **50,500** | 96.0 | 3467 | 63,300 |
| IMR-7828 | 91.0 | 3220 | 53,500 | 96.0 | 3427 | 64,100 |
| N165 | 95.0 | 3267 | 53,700 | 100.0 | 3480 | 64,800 |
| H1000 | 97.0 | 3116 | 49,700 | 102.5+ | 3364 | 63,300 |
| AA8700 | 106.0 | 3089 | 51,900 | 112.0+ | 3176 | 55,500 |

**165 gr. Jacketed Ballistic Tip** — **BC:** .475 **SD:** .248
3.600" OAL

| Powder | Sugg Starting Grains | Velocity fps | Pressure P.S.I. | Max Load Grains | Velocity fps | Pressure P.S.I. |
|---|---|---|---|---|---|---|
| IMR-4831 | 84.5 | 3133 | 56,700 | 89.0 | 3270 | 62,800 |
| WXR | 87.0 | 3184 | 62,100 | 92.0 | 3250 | 63,400 |
| XMR-3100 | 86.5 | 3033 | 52,000 | 90.5 | 3234 | 62,400 |
| **H-4831** | 87.0 | 3073 | 57,700 | **92.0** | **3209** | **64,100** |
| RX22 | 89.0 | 3178 | 57,300 | 94.0 | 3316 | 63,800 |
| IMR-7828 | 89.0 | 3111 | 56,000 | 94.0 | 3264 | 64,000 |
| MAGPRO | 92.0 | 3175 | 55,300 | 96.0 | 3302 | 60,200 |
| RX25 | 92.0 | 3086 | 52,300 | 97.0 | 3296 | 62,900 |
| H1000 | 94.5 | 3015 | 51,500 | 99.7 | 3211 | 62,100 |
| N170 | 95.0 | 3164 | 60,300 | 100.0 | 3252 | 63,500 |
| Retumbo | 98.0 | 3145 | 50,900 | 103.0+ | 3310 | 58,800 |
| AA8700 | 107.0 | 3120 | 57,300 | 113.0+ | 3232 | 62,200 |

**Note:** Loads shown in shaded panels are maximum.
Loads shown in bold designate potentially most accurate load.
\+ Designates a compressed powder charge.

# 300 Remington Ultra-Mag

**180 gr. Jacketed Scirocco**
3.600" OAL
**BC:** .520
**SD:** .271

| Powder | Sugg Starting Grains | Velocity fps | Pressure P.S.I. | Max Load Grains | Velocity fps | Pressure P.S.I. |
|---|---|---|---|---|---|---|
| IMR-4831 | 80.0 | 2997 | 55,600 | 84.0 | 3152 | 63,700 |
| WXR | 85.0 | 2989 | 57,100 | 89.5 | 3112 | 62,300 |
| XMR-3100 | 84.0 | 2950 | 53,600 | 89.0 | 3131 | 64,100 |
| H-4831 | 84.0 | 3009 | 58,900 | 89.0 | 3123 | 64,600 |
| RX22 | 86.0 | 3064 | 55,500 | 90.5 | 3222 | 63,500 |
| **IMR-7828** | 86.0 | 2987 | 54,100 | **91.0** | **3171** | **64,200** |
| MAGPRO | 89.0 | 3074 | 57,400 | 94.0 | 3192 | 62,100 |
| RX25 | 89.0 | 2980 | 50,800 | 93.5 | 3196 | 62,400 |
| H1000 | 92.0 | 2953 | 54,900 | 97.0 | 3120 | 63,700 |
| N170 | 91.0 | 2999 | 56,000 | 96.0 | 3157 | 64,000 |
| Retumbo | 96.0 | 3093 | 55,000 | 101.0 | 3231 | 61,900 |
| H50BMG | 100.0 | 2971 | 55,600 | 106.0+ | 3121 | 63,400 |
| H870 | 104.0 | 2983 | 50,900 | 110.0+ | 3091 | 55,400 |
| AA8700 | 106.0 | 3024 | 55,200 | 112.0+ | 3179 | 62,800 |

**200 gr. Jacketed A-Frame**
3.535" OAL
**BC:** .444
**SD:** .301

| Powder | Sugg Starting Grains | Velocity fps | Pressure P.S.I. | Max Load Grains | Velocity fps | Pressure P.S.I. |
|---|---|---|---|---|---|---|
| WXR | 77.0 | 2705 | 50,500 | 81.0 | 2887 | 62,700 |
| **XMR-3100** | 81.0 | 2836 | 55,000 | **85.5** | **2993** | **63,900** |
| RX22 | 83.0 | 2904 | 57,800 | 87.0 | 3018 | 63,700 |
| IMR-7828 | 83.0 | 2872 | 58,700 | 87.0 | 2976 | 63,500 |
| MAGPRO | 80.0 | 2770 | 53,400 | 84.0 | 2901 | 60,000 |
| N170 | 85.0 | 2778 | 55,000 | 89.0 | 2907 | 62,200 |
| RX25 | 86.0 | 2884 | 55,700 | 91.0 | 3036 | 62,900 |
| H1000 | 88.0 | 2816 | 54,200 | 93.0 | 2946 | 60,700 |
| Retumbo | 91.0 | 2941 | 56,100 | 96.0 | 3067 | 62,400 |
| H50BMG | 95.0 | 2877 | 60,500 | 100.5 | 2965 | 64,200 |
| H870 | 104.0 | 3008 | 58,000 | 110.0+ | 3105 | 62,900 |
| AA-8700 | 104.0 | 2990 | 60,600 | 110.0+ | 3066 | 63,100 |

***#311644**
190 gr. (#2 Alloy) 3.600" OAL
**BC:** .272
**SD:** .284

| Powder | Sugg Starting Grains | Velocity fps | Pressure P.S.I. | Max Load Grains | Velocity fps | Pressure P.S.I. |
|---|---|---|---|---|---|---|
| SR-4759 | 23.0 | 1502 | 13,600 | 40.0 | 2198 | 39,000 |
| **XMP-5744** | 25.0 | 1484 | 12,500 | **44.0** | **2208** | **30,800** |
| IMR-4198 | 25.0 | 1505 | 12,600 | 45.0 | 2208 | 32,500 |
| RX7 | 27.5 | 1500 | 13,000 | 46.5 | 2200 | 30,800 |
| Varget | 33.0 | 1551 | 12,300 | 54.5 | 2207 | 27,600 |

**Note:** Loads shown in shaded panels are maximum.
Loads shown in bold designate potentially most accurate load.
* Designates use of 9½ primers.
\+ Designates a compressed powder charge.

# 300 Weatherby Magnum

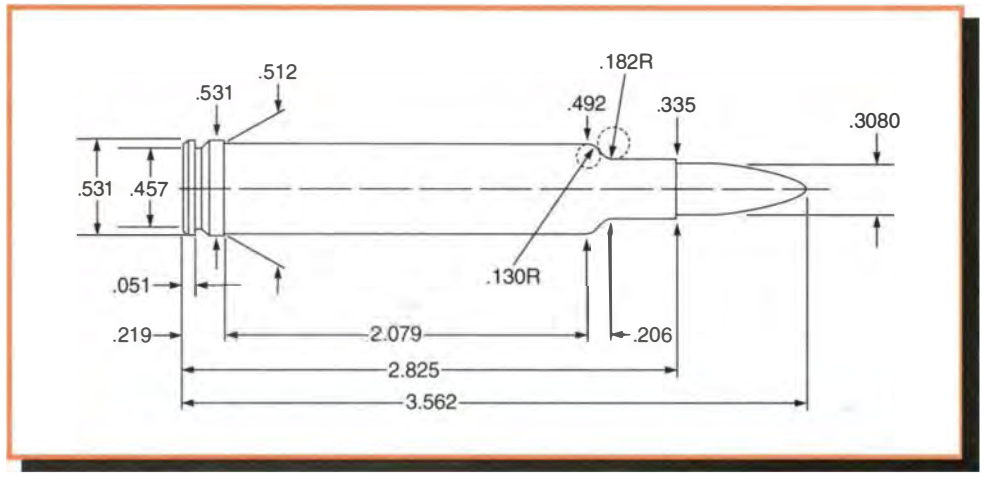


**Comments:**

This is probably the most popular–and one of the oldest–of all the calibers offered by Weatherby. Roy Weatherby based this 300 Magnum on a blown out 300 Holland and Holland case featuring the famous double radius shoulder in 1943. It has been the king of factory 30-caliber Magnums for many years being only recently challenged by a new generation of cartridges based on the 404 Jeffrey case as well as Weatherby's own 30-378. The 300 Weatherby can best the 300 Winchester Magnum by around 200 feet per second when properly loaded. The popularity of the 300 Weatherby has prompted most major manufacturers to offer rifles chambered for it over the years. H-4831 has been one of the more popular powders for loading this particular 300. Weatherby recommends the exclusive use of the Federal 215 Magnum primer for all jacketed loads. Cast bullet shooters should use the standard primers as indicated. All cast bullet propellants produced good results with XMP-5744 giving top ballistic uniformity. This data is intended for commercially manufactured and chambered rifles. It is not for use in custom chambered guns that may lack the free bore found in standard Weatherby chambers.

**Test Components:**

Cases . . . . . .Federal
Trim-to Length . . . . . .2.825"
Primers . . . . . .Federal 215 and 210
Primer Size . . . . . .Large Rifle, Magnum and Standard
Lyman Shell Holder . . . . . .No. 13
Jacketed Bullets Used . . .Barnes XLC #30854, 150 gr.
Nosler Ballistic Tip #30165, 165 gr.
Barnes X #30835, 180 gr.
Swift A-Frame, 200 gr.
Hornady RN #3090, 220 gr.
Cast Bullets Used . . . . . .(sized to .309" dia)
*gas check bullet *#311291, 170 gr.
*#311644, 190 gr.
*#311284, 210 gr.

**Test Specifications:**
**(Velocity Only)**

Firearm Used . . . . . .Weatherby Mk V
Barrel Length . . . . . .26"
Twist . . . . . .1-10"
Groove Dia. . . . . ..308"

**150 gr. Barnes XLC** — 3.560" OAL — BC: .428 SD: .226

| Powder | Sugg Starting Grains | Velocity fps | Pressure | Max Load Grains | Velocity fps | Pressure |
|---|---|---|---|---|---|---|
| IMR-4350 | 76.0 | 3217 | — | 81.0 | 3501 | — |
| **XMR-3100** | 80.5 | 3217 | — | **85.0** | **3418** | — |
| RX22 | 85.0 | 3400 | — | 90.0+ | 3589 | — |
| IMR-7828 | 85.0 | 3334 | — | 90.0+ | 3532 | — |
| RX25 | 86.0 | 3301 | — | 91.0+ | 3511 | — |
| H1000 | 85.0 | 3264 | — | 90.0+ | 3428 | — |

**165 gr. Jacketed Ballistic Tip** — 3.560" OAL — BC: .475 SD: .248

| Powder | Sugg Starting Grains | Velocity fps | Pressure | Max Load Grains | Velocity fps | Pressure |
|---|---|---|---|---|---|---|
| N160 | 78.0 | 3234 | — | 82.5 | 3411 | — |
| IMR-4350 | 71.0 | 2988 | — | 75.0 | 3189 | — |
| XMR-3100 | 80.0 | 3214 | — | 85.0 | 3385 | — |
| H-4831SC | 76.0 | 2914 | — | 80.0 | 3066 | — |
| RX22 | 80.0 | 3292 | — | 85.0 | 3350 | — |
| IMR-7828 | 81.0 | 3221 | — | 86.0 | 3376 | — |
| **H1000** | **84.5** | **3063** | — | 89.0 | 3220 | — |
| RX25 | 85.5 | 3114 | — | 90.0 | 3445 | — |

**Note:** Loads shown in shaded panels are maximum.
Loads shown in bold designate potentially most accurate load.
+ Designates a compressed powder charge.

# 300 Weatherby Magnum

**180 gr. Barnes X**
3.560" OAL
**BC:** .511
**SD:** .271

| Powder | Sugg Starting Grains | Velocity fps | Pressure | Max Load Grains | Velocity fps | Pressure |
|---|---|---|---|---|---|---|
| N160 | 76.0 | 3028 | — | 80.0 | 3199 | — |
| IMR-4350 | 68.5 | 2721 | — | 73.0 | 2994 | — |
| XMR-3100 | 77.0 | 2949 | — | 81.0 | 3109 | — |
| H-4831SC | 77.0 | 2877 | — | 81.0 | 3054 | — |
| **RX22** | 78.0 | 2959 | — | **82.0** | **3116** | — |
| IMR-7828 | 80.0 | 3033 | — | 85.0 | 3210 | — |
| H1000 | 81.0 | 2818 | — | 85.0 | 2985 | — |
| RX25 | 83.0 | 3108 | — | 87.5 | 3278 | — |

**200 gr. Jacketed A-Frame**
3.560" OAL
**BC:** .444
**SD:** .301

| Powder | Sugg Starting Grains | Velocity fps | Pressure | Max Load Grains | Velocity fps | Pressure |
|---|---|---|---|---|---|---|
| XMR-3100 | 74.0 | 2771 | — | 78.0 | 2952 | — |
| H-4831SC | 73.5 | 2724 | — | 77.5 | 2867 | — |
| **RX22** | 74.0 | 2775 | — | **78.0** | **2941** | — |
| IMR-7828 | 78.0 | 2919 | — | 82.0 | 3105 | — |
| H1000 | 80.0 | 2740 | — | 85.0+ | 2967 | — |
| **RX25** | 80.0 | 2910 | — | **84.0+** | **3092** | — |
| AA8700 | 88.0 | 2762 | — | 93.0+ | 2891 | — |
| H870 | 88.0 | 2726 | — | 92.0 | 2833 | — |

**220 gr. Jacketed RN**
3.545" OAL
**BC:** .300
**SD:** .331

| Powder | Sugg Starting Grains | Velocity fps | Pressure | Max Load Grains | Velocity fps | Pressure |
|---|---|---|---|---|---|---|
| XMR-3100 | 71.0 | 2624 | — | 75.0 | 2774 | — |
| H-4831SC | 73.0 | 2654 | — | 76.0 | 2800 | — |
| RX22 | 72.0 | 2639 | — | 76.0 | 2795 | — |
| IMR-7828 | 77.0 | 2811 | — | 81.0 | 2992 | — |
| **H1000** | **76.0** | **2535** | — | 79.5 | 2735 | — |
| RX25 | 78.0 | 2795 | — | 82.0 | 3008 | — |
| AA8700 | 88.0 | 2732 | — | 93.0 | 2849 | — |

***#311291**
170 gr. (#2 Alloy) 3.390" OAL
**BC:** .202
**SD:** .252

| Powder | Sugg Starting Grains | Velocity fps | Pressure | Max Load Grains | Velocity fps | Pressure |
|---|---|---|---|---|---|---|
| **SR-4759** | **22.0** | **1645** | — | 39.0 | 2393 | — |
| XMP-5744 | 24.5 | 1616 | — | 40.0 | 2300 | — |
| RX7 | 25.5 | 1642 | — | 39.0 | 2215 | — |

***#311644**
190 gr. (#2 Alloy) 3.530" OAL
**BC:** .272
**SD:** .284

| Powder | Sugg Starting Grains | Velocity fps | Pressure | Max Load Grains | Velocity fps | Pressure |
|---|---|---|---|---|---|---|
| SR-4759 | 21.5 | 1594 | — | 35.5 | 2213 | — |
| XMP-5744 | 24.5 | 1591 | — | 39.0 | 2219 | — |
| **RX7** | **25.5** | **1613** | — | 39.5 | 2155 | — |

***#311284**
210 gr. (#2 Alloy) 3.560" OAL
**BC:** .332
**SD:** .314

| Powder | Sugg Starting Grains | Velocity fps | Pressure | Max Load Grains | Velocity fps | Pressure |
|---|---|---|---|---|---|---|
| SR-4759 | 21.0 | 1512 | — | 35.0 | 2125 | — |
| **XMP-5744** | 23.0 | 1488 | — | **37.5** | **2102** | — |
| RX7 | 24.0 | 1521 | — | 39.0 | 2094 | — |

**Note:** Loads shown in shaded panels are maximum.
Loads shown in bold designate potentially most accurate load.
* Designates use of 210 primers.
\+ Designates a compressed powder charge.

# 30-378 Weatherby Magnum

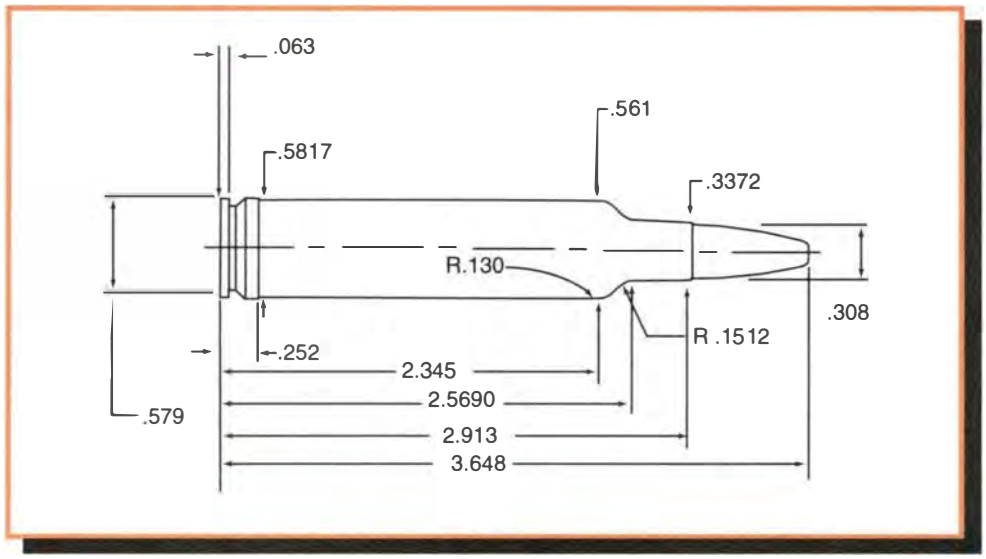


**Comments:**

Roy Weatherby first necked down his massive 378 case to 30-caliber in joint experiments with the United States Army during the 1950s. This cartridge survived in various wildcat incarnations since then, particularly with long-range benchrest shooters, before Weatherby formally introduced it as a standard chambering in their lineup in 1996. This is not a varmint cartridge. Shooters looking for a fast 30-caliber magnum rifle would be hard pressed to surpass this chambering. The latest generation of slow burning powders enable overbored cartridges such as this to perform to their full potential. While probably a bit more than many shooters would care to shoot extensively, this Weatherby is hard to beat — 3,400 feet per second with 180 grain bullets — for driving heavy bullets long distances.

Slow burning powder and premium bullets are in order for the 30-378. Powders well suited to this behemoth include H1000, H50BMG, and Reloder 25. The Swift Scirocco is ideal for the high velocities generated by this cartridge although shooters may have to experiment with seating depths for best accuracy. Limited cast bullet data is included for those shooters looking for off-season recreational shooting without the substantial recoil and blast of full house 30-378 loads. This data is intended for commercially produced and chambered rifles. It is not for use in custom chambered gun that may lack the free bore found in standard Weatherby chambers.

**Test Components:**

Cases . . . . . .Weatherby
Trim-to Length . . . . . .2.903"
Primers . . . . . .Federal 215 and 210
Primer Size . . . . . .Large Rifle, Magnum and Standard
Lyman Shell Holder . . . . . .No. 17
Jacketed Bullets Used . . .Nosler Ballistic Tip, #30165, 165 gr.
Swift Scirocco, 180 gr.
Swift A-Frame, 200 gr.
Cast Bullets Used . . . . . (sized to .309" dia)
*gas check bullet *#311291, 170 gr.
*#311644, 190 gr.
*#311284, 210 gr.

**Test Specifications:**
**(Velocity Only)**

Firearm Used . . . . . .Weatherby Mk V
Barrel Length . . . . . .26"
Twist . . . . . .1-10"
Groove Dia. . . . . .308"

**165 gr. Jacketed Ballistic Tip** — 3.630" OAL — **BC:** .475 **SD:** .248

| Powder | Sugg Starting Grains | Velocity fps | Pressure | Max Load Grains | Velocity fps | Pressure |
|---|---|---|---|---|---|---|
| RX22 | 99.0 | 3329 | — | 104.0 | 3492 | — |
| IMR-7828 | 100.0 | 3322 | — | 105.0 | 3520 | — |
| RX25 | 103.0 | 3329 | — | 108.0 | 3537 | — |
| H1000 | 106.0 | 3221 | — | 112.0 | 3481 | — |
| AA8700 | 118.0 | 3364 | — | 124.0+ | 3540 | — |
| **H50BMG** | 116.0 | 3280 | — | **123.0+** | **3456** | — |
| H870 | 116.0 | 3224 | — | 122.0+ | 3434 | — |

**180 gr. Jacketed Scirocco** — 3.630" OAL — **BC:** .520 **SD:** .271

| Powder | Sugg Starting Grains | Velocity fps | Pressure | Max Load Grains | Velocity fps | Pressure |
|---|---|---|---|---|---|---|
| RX22 | 96.0 | 3206 | — | 101.0 | 3372 | — |
| IMR-7828 | 95.0 | 3142 | — | 101.0 | 3371 | — |
| RX25 | 100.0 | 3194 | — | 106.0 | 3451 | — |
| H1000 | 105.0 | 3209 | — | 110.0 | 3429 | — |
| AA8700 | 115.0 | 3221 | — | 121.0 | 3406 | — |
| **H50BMG** | 114.0 | 3213 | — | **120.0** | **3342** | — |
| H870 | 112.0 | 3147 | — | 118.0 | 3351 | — |

**Note:** Loads shown in shaded panels are maximum.
Loads shown in bold designate potentially most accurate load.
+ Designates a compressed powder charge.

# 30-378 Weatherby Magnum

**200 gr. Jacketed A-Frame**
3.615" OAL
**BC:** .444
**SD:** .301

| Powder | Sugg Starting Grains | Velocity fps | Pressure | Max Load Grains | Velocity fps | Pressure |
|---|---|---|---|---|---|---|
| RX25 | 97.0 | 3008 | — | 102.0 | 3195 | — |
| H1000 | 100.0 | 2981 | — | 106.0 | 3174 | — |
| AA8700 | 111.0 | 3002 | — | 117.0 | 3211 | — |
| **H50BMG** | 111.0 | 3116 | — | **117.0** | **3270** | — |
| H870 | 110.0 | 3011 | — | 116.0 | 3205 | — |

***#311291**
170 gr. (#2 Alloy) 3.500" OAL
**BC:** .202
**SD:** .256

| Powder | Sugg Starting Grains | Velocity fps | Pressure | Max Load Grains | Velocity fps | Pressure |
|---|---|---|---|---|---|---|
| SR-4759 | 25.0 | 1655 | — | 41.5 | 2306 | — |
| **XMP-5744** | **28.0** | **1645** | — | 45.5 | 2313 | — |
| RX7 | 30.0 | 1711 | — | 49.0 | 2336 | — |

***#311644**
190 gr. (#2 Alloy) 3.630" OAL
**BC:** .272
**SD:** .284

| Powder | Sugg Starting Grains | Velocity fps | Pressure | Max Load Grains | Velocity fps | Pressure |
|---|---|---|---|---|---|---|
| SR-4759 | 27.0 | 1710 | — | 43.0 | 2294 | — |
| **XMP-5744** | **30.0** | **1695** | — | 46.0 | 2272 | — |
| RX7 | 28.0 | 1628 | — | 48.0 | 2248 | — |

***#311284**
210 gr. (#2 Alloy) 3.700" OAL
**BC:** .332
**SD:** .314

| Powder | Sugg Starting Grains | Velocity fps | Pressure | Max Load Grains | Velocity fps | Pressure |
|---|---|---|---|---|---|---|
| SR-4759 | 26.0 | 1620 | — | 44.0 | 2258 | — |
| **XMP-5744** | 31.0 | 1701 | — | **47.0** | **2261** | — |
| RX7 | 30.0 | 1620 | — | 48.0 | 2202 | — |

**Note:** Loads shown in shaded panels are maximum.
Loads shown in bold designate potentially most accurate load.
* Designates use of 210 primers.

# 7.62 x 39 Russian

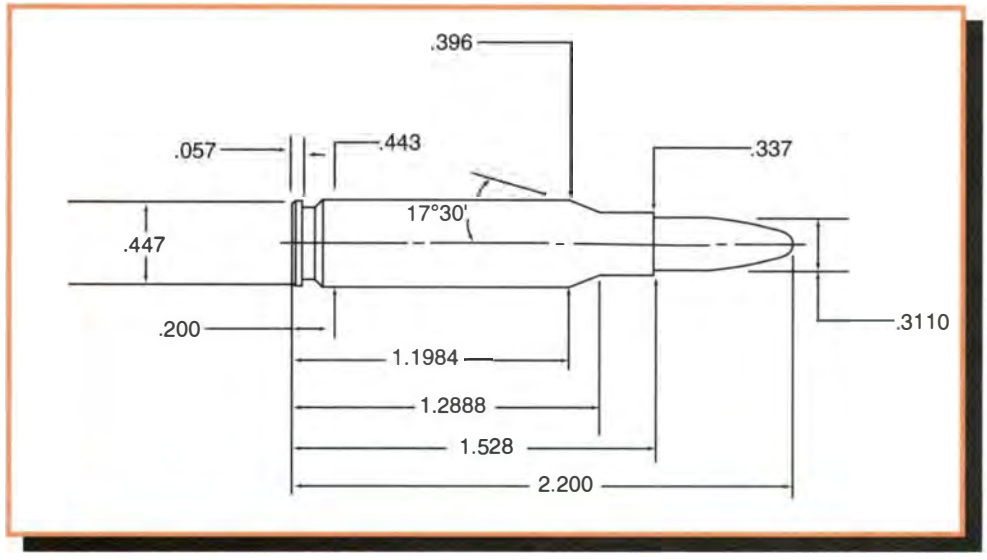


**Comments:**

The 7.62x39mm cartridge originated in the SKS rifle in the Soviet Union in the midst of World War Two. Some sources state that it was based on the German 7.92x33mm *Kurz* cartridge but it may have preceded the German development by a year or so. A fair number of Soviet pattern rifles including the SKS have been imported in recent years. Ruger offers the Mini-Thirty and bolt action rifles for this little cartridge. Ruger rifles utilize barrels with a .308" groove while those produced overseas use the standard .311". Lyman's die sets for the 7.62x39mm contain both size expander balls. Shooters are still advised to slug their bore to verify actual groove diameter before reloading.

Tons of surplus 7.62x39mm ammunition have been imported. Much of this is steel cased and/or berdan primed. Reloaders should properly discard these fired cases and use boxer primed brass cases for reloading purposes. Shooters should be advised that Winchester cases use Large Rifle primers whereas Remington cases use Small Rifle primers. Ballistically, this cartridge is usually lumped in with the 30-30. However, the 30-30 can be loaded with a wider range of bullet weights. Bullet selection is limited to the 110 to 130-grain range due to this cartridge's ballistic levels. Most semiautomatics chambered for this cartridge are doing pretty well if the shooter achieves three-inch groups at 100 yards. H-335 produced the best results in our lab tests. Listed starting loads for cast bullets may not function the action of semiautomatics.

**Test Components:**

Cases . . . . . .Winchester
Trim-to Length . . . . . .1.518"
Primers . . . . . .Winchester WLR
Primer Size . . . . . .Large Rifle
Lyman Shell Holder . . . . . .No. 3
Jacketed Bullets Used . . . . . .Sierra HP #2110, 110 gr.
Hornady SP #3140, 123 gr. (.310")
Hornady SP #3020, 130 gr.

Cast Bullets Used . . . . . .(sized to .310" dia)
*gas check bullet *#311359, 115 gr.
#311410, 130 gr.

**Test Specifications: (Velocity & Pressure)**

Firearm Used . . . . . .Universal Receiver
Barrel Length . . . . . .20"
Twist . . . . . .1-9½"
Groove Dia. . . . . .310"

**110 gr. Jacketed HP** — 2.200" OAL — **BC:** .188 **SD:** .166

| Powder | Sugg Starting Grains | Velocity fps | Pressure C.U.P. | Max Load Grains | Velocity fps | Pressure C.U.P. |
|---|---|---|---|---|---|---|
| **IMR-4227** | **21.0** | **2115** | **31,100** | 23.0 | 2353 | 42,300 |
| N130 | 26.5 | 2234 | 29,700 | 29.6 | 2468 | 39,900 |
| AA1680 | 24.0 | 2245 | 29,400 | 26.7 | 2533 | 42,800 |
| IMR-4198 | 22.6 | 2115 | 28,700 | 25.2 | 2416 | 40,200 |
| RX7 | 26.5 | 2313 | 32,300 | 29.5 | 2558 | 43,400 |

**123gr. Jacketed SP** — 2.200" OAL — **BC:** .252 **SD:** .183

| Powder | Sugg Starting Grains | Velocity fps | Pressure C.U.P. | Max Load Grains | Velocity fps | Pressure C.U.P. |
|---|---|---|---|---|---|---|
| IMR-4227 | 20.0 | 1995 | 32,700 | 22.0 | 2204 | 43,000 |
| N130 | 25.5 | 2167 | 35,400 | 28.6 | 2391 | 44,300 |
| AA1680 | 23.0 | 2108 | 32,800 | 25.7 | 2412 | 44,600 |
| IMR-4198 | 22.0 | 2064 | 33,800 | 24.6 | 2307 | 44,000 |
| RX7 | 24.0 | 2116 | 32,100 | 26.8 | 2376 | 44,700 |
| **H-335** | **30.5** | **2085** | **27,400** | 34.5+ | 2363 | 43,300 |

**Note:** Loads shown in shaded panels are maximum.
Loads shown in bold designate potentially most accurate load.
+ Designates a compressed powder charge.

# 7.62 x 39 Russian

**130 gr. Jacketed SP**
2.200" OAL
**BC:** .295
**SD:** .196

| Powder | Sugg Starting Grains | Velocity fps | Pressure C.U.P. | Max Load Grains | Velocity fps | Pressure C.U.P. |
|---|---|---|---|---|---|---|
| IMR-4227 | 19.0 | 1936 | 30,800 | 21.5 | 2172 | 44,700 |
| N130 | 25.0 | 2072 | 30,700 | 27.5+ | 2282 | 39,100 |
| AA1680 | 22.0 | 1962 | 25,500 | 23.8 | 2259 | 40,100 |
| IMR-4198 | 20.5 | 1932 | 28,200 | 23.4 | 2275 | 43,400 |
| RX7 | 24.0 | 2086 | 29,800 | 26.0 | 2340 | 42,600 |
| **H-335** | **29.5** | **2030** | **29,400** | 33.2+ | 2239 | 36,800 |

**#311359**
115 gr. (#2 Alloy) 2.060" OAL
**BC:** .181
**SD:** .171

| Powder | Sugg Starting Grains | Velocity fps | Pressure C.U.P. | Max Load Grains | Velocity fps | Pressure C.U.P. |
|---|---|---|---|---|---|---|
| Unique | 8.0 | 1594 | 25,500 | 10.0 | 1816 | 36,500 |
| SR-4759 | 16.7 | 1978 | 29,000 | 18.7 | 2186 | 40,200 |
| IMR-4227 | 17.0 | 1906 | 25,800 | 19.2 | 2142 | 35,700 |
| **XMP-5744** | **17.0** | **1744** | **22,100** | 21.0 | 2107 | 42,600 |
| IMR-4198 | 19.8 | 1968 | 25,800 | 22.6 | 2273 | 39,000 |
| RX7 | 25.0 | 2189 | 28,100 | 30.0+ | 2561 | 41,100 |
| AA2230 | 26.0 | 2092 | 32,000 | 32.0+ | 2445 | 44,200 |

**#311410**
130 gr. (#2 Alloy) 2.200" OAL
**BC:** .239
**SD:** .193

| Powder | Sugg Starting Grains | Velocity fps | Pressure C.U.P. | Max Load Grains | Velocity fps | Pressure C.U.P. |
|---|---|---|---|---|---|---|
| Unique | 8.0 | 1552 | 23,500 | 10.3 | 1786 | 36,900 |
| SR-4759 | 16.5 | 1935 | 29,900 | 19.0 | 2139 | 37,600 |
| IMR-4227 | 17.5 | 1883 | 25,800 | 19.5 | 2097 | 35,900 |
| **XMP-5744** | **18.5** | **1804** | **22,700** | 23.0 | 2175 | 43,400 |
| IMR-4198 | 20.0 | 1897 | 25,500 | 22.0 | 2134 | 34,200 |
| RX7 | 25.0 | 2164 | 30,600 | 29.0+ | 2442 | 38,800 |
| AA-2230 | 25.0 | 2015 | 30,700 | 30.0+ | 2280 | 39,600 |

**Note:** Loads shown in shaded panels are maximum.
Loads shown in bold designate potentially most accurate load.
+ Designates a compressed powder charge.

# 7.62 x 54R Russian

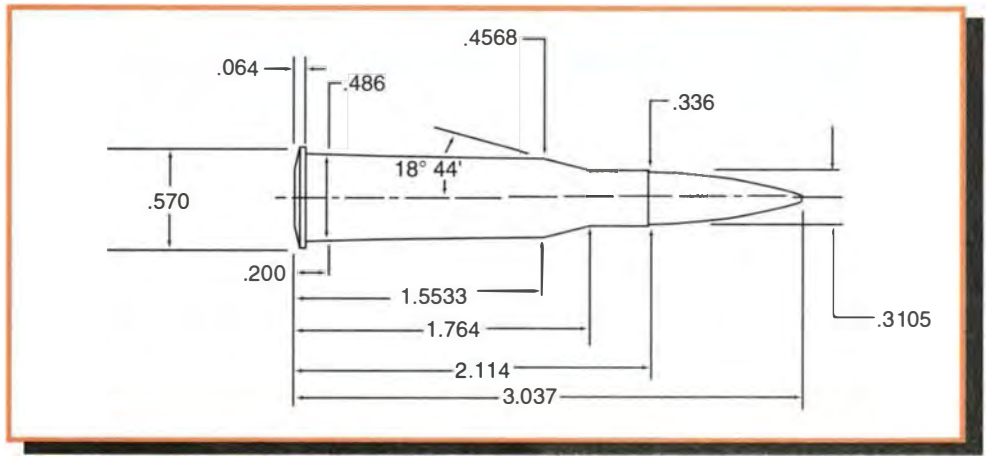


**Comments:**

This is currently the longest-lived military cartridge around. It was initially adopted by Imperial Russia in 1891 and continues to serve in the post-Soviet era as a light machine gun cartridge. It was the Russian mainstay of both World Wars and saw wide distribution among communist-bloc countries. Original ballistics yielded a 210-grain bullet traveling approximately 2,000 feet per second. Following the trend of the world's militaries, it was upgraded to a 150-grain bullet at 2,600 feet per second in 1909. American shooters first became familiar with the cartridge after World War One. Several U.S. companies produced Mosin-Nagant rifles under contract for the Czar but withheld delivery following the Bolshevik Revolution of 1917. Many of these brand new rifles chambered for the Russian cartridge subsequently turned up on the U.S. market. Many Mosin-Nagant rifles have recently been imported from various countries in condition ranging from mint to truly awful. Shooters should have their rifle examined by a qualified gunsmith before shooting. Winchester also produced the Model 95 in 7.62x54R for the Russian government, and these occasionally turn up.

Surplus ammunition is usually abundant but more often than not it is corrosive and berdan primed. Bullet diameter is nominally .310", however, large variations in groove diameters are the norm here. Our test data utilized .311" and .312" diameter bullets, as the dimensions in many rifles chambered for this caliber tend to run large. Some rifles will shoot .308" bullets just fine. Most of the bullets listed in our data are available from their manufacturers in .308" diameter should the shooter have a rifle with a smaller size bore. Use of .308" diameter bullets will require use of the smaller 308 caliber expanding button in the full-length resizing die for proper bullet tension. This can be an extremely accurate cartridge in a good rifle. It's been used throughout Scandinavia as a big-game cartridge and has been necked up and down to just about every conceivable bullet size in Finland. Norma and Lapua both offer boxer primed cases. Hodgdon's Varget and IMR-4350 provided the best ballistic uniformity with jacketed bullets. Data is provided for cast bullet #314299 but shooters can substitute cast bullet #311299 if the bore measures small.

**Test Components:**

Cases . . . . . .Norma
Trim-to Length . . . . . .2.105"
Primers . . . . . .Federal 210
Primer Size . . . . . .Large Rifle
Lyman Shell Holder . . . . . .No. 17
Jacketed Bullets Used . . . . . .
Sierra SPT #2305, 125 gr. (.311")
Hornady SP # 3120, 150 gr. (.312")
Hornady RN #3130, 174 gr. (.312")
Sierra SPT #2310, 180 gr. (.311")
Cast Bullets Used . . . . . .(sized to .313" dia)
*gas check bullet *#314299, 200 gr.

**Test Specifications: (Velocity Only)**

Firearm Used . . . . . .SAKO Mosin-Nagant
Barrel Length . . . . . .26"
Twist . . . . . .1-9.5"
Groove Dia. . . . . .313"

**125 gr. Jacketed SPT** — 2.800" OAL — **BC:** .274 **SD:** .185

| Powder | Sugg Starting Grains | Velocity fps | Pressure | Max Load Grains | Velocity fps | Pressure |
|---|---|---|---|---|---|---|
| XMR-2015 | 41.5 | 2647 | — | 46.0 | 2894 | — |
| IMR-4895 | 43.5 | 2517 | — | 48.0 | 2816 | — |
| **Varget** | 45.5 | 2677 | — | **50.5** | **2994** | — |
| N140 | 45.0 | 2493 | — | 50.0 | 2824 | — |
| RX15 | 46.0 | 2651 | — | 51.0 | 2973 | — |

**150 gr. Jacketed SP** — 2.870" OAL — **BC:** .361 **SD:** .220

| Powder | Sugg Starting Grains | Velocity fps | Pressure | Max Load Grains | Velocity fps | Pressure |
|---|---|---|---|---|---|---|
| XMR-2015 | 40.0 | 2456 | — | 44.5 | 2683 | — |
| IMR-4895 | 42.5 | 2438 | — | 47.5 | 2748 | — |
| Varget | 43.0 | 2476 | — | 48.0 | 2772 | — |
| N140 | 43.5 | 2395 | — | 48.5 | 2715 | — |
| **RX15** | **43.5** | **2477** | — | 48.5 | 2744 | — |

**Note:** Loads shown in shaded panels are maximum.
Loads shown in bold designate potentially most accurate load.

# 7.62 x 54R Russian

**174 gr. Jacketed RN**
2.815" OAL
**BC:** .262
**SD:** .255

| Powder | Sugg Starting Grains | Velocity fps | Pressure | Max Load Grains | Velocity fps | Pressure |
|---|---|---|---|---|---|---|
| IMR-4895 | 41.0 | 2233 | — | 45.5 | 2496 | — |
| XMR-2495 | 41.5 | 2300 | — | 46.0 | 2469 | — |
| **Varget** | **42.0** | **2317** | — | 46.5 | 2586 | — |
| N140 | 42.0 | 2243 | — | 46.5 | 2484 | — |
| RX15 | 42.0 | 2312 | — | 47.0 | 2540 | — |
| N150 | 43.0 | 2287 | — | 48.0 | 2562 | — |
| **IMR-4350** | 47.5 | 2196 | — | **52.5** | **2515** | — |

**180 gr. Jacketed SPT**
2.975" OAL
**BC:** .411
**SD:** .266

| Powder | Sugg Starting Grains | Velocity fps | Pressure | Max Load Grains | Velocity fps | Pressure |
|---|---|---|---|---|---|---|
| IMR-4895 | 41.0 | 2115 | — | 45.5 | 2488 | — |
| XMR-2495 | 41.5 | 2314 | — | 46.0 | 2428 | — |
| **Varget** | 42.0 | 2261 | — | **46.5** | **2542** | — |
| N140 | 42.0 | 2221 | — | 46.5 | 2471 | — |
| RX15 | 42.0 | 2206 | — | 47.0 | 2499 | — |
| N150 | 43.0 | 2238 | — | 48.0 | 2512 | — |
| **IMR-4350** | **47.5** | **2160** | — | 52.0 | 2504 | — |

**#314299**
200 gr. (#2 Alloy) 2.915" OAL
**BC:** .377
**SD:** .292

| Powder | Sugg Starting Grains | Velocity fps | Pressure | Max Load Grains | Velocity fps | Pressure |
|---|---|---|---|---|---|---|
| 2400 | 16.0 | 1456 | — | 22.0 | 1779 | — |
| SR-4759 | 17.5 | 1524 | — | 29.0 | 2139 | — |
| IMR-4227 | 20.0 | 1537 | — | 30.0 | 2053 | — |
| **XMP-5744** | 20.0 | 1513 | — | **32.5** | **2153** | — |
| IMR-4198 | 20.0 | 1497 | — | 32.5 | 2108 | — |
| N133 | 24.5 | 1533 | — | 34.0 | 2012 | — |
| RX7 | 22.5 | 1525 | — | 35.0 | 2143 | — |

**Note:** Loads shown in shaded panels are maximum.
Loads shown in bold designate potentially most accurate load.

# 7.65 Argentine Mauser (7.65 x 53mm)

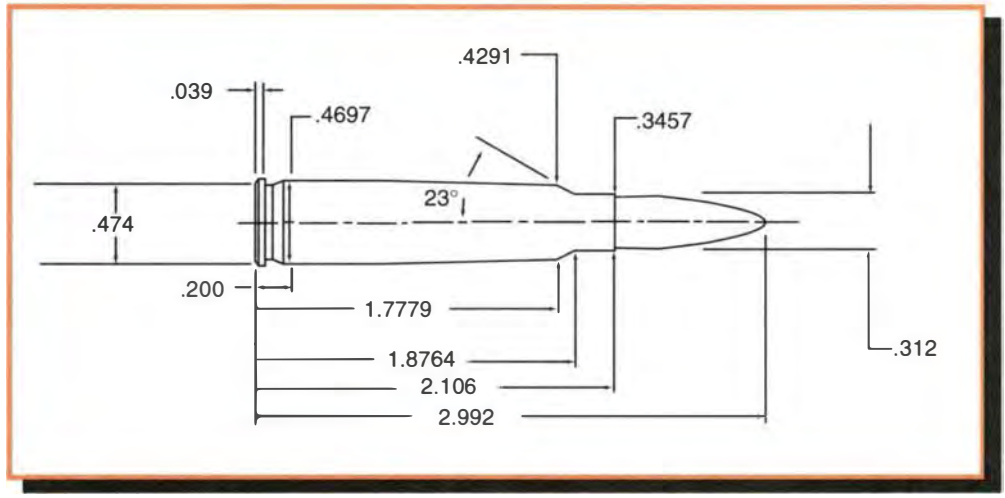


**Comments:**

The 7.65x53mm cartridge led a long, if not particularly illustrious, military career. This was Paul Mauser's first smokeless military cartridge. Its original incarnation in 1889 propelled a 215-grain round nose bullet at approximately 2,000 feet per second. However, this cartridge was not immune to the advances in ballistic technology at the turn of the twentieth century. Military loadings soon included a 182-grain bullet at 2,590 feet per second, and a 154-grain bullet at 2,750. Many rifles chambered for this caliber were sold throughout Latin America. Consequently, large numbers of foreign military surplus made their way to American shores over the years. The 7.65x53 features a shorter neck than typically found on other Mauser cartridges. This caliber never achieved the popularity with American shooters as did its 7x57 and 7.9x57 cousins. The 6.5x55 Swede has recently eclipsed its appeal on the surplus market. Remington and Winchester both offered rifles chambered in 7.65x53 and factory ammunition for several years between the World Wars. Norma still offers a soft-point factory load. Surplus ammunition is fairly common but it will be berdan primed and is often corrosive.

Ballistics of this Mauser cartridge are similar to the 308 Winchester. Powders suitable for the 308 will work here. The handloader also has a decent, if not overly broad selection of .311" and .312" diameter bullets to work with. There is no SAAMI pressure limit for this cartridge. Some shooters use reformed 30-06 cases so common sense is imperative when working up loads. Many of the recently imported rifles are in excellent condition and make good shooters. Those with an original Model 1889 should not use the listed maximum loads for jacketed bullets. Although well made, they do not have the inherent strength of later rifles built upon the stronger Model 98 action. Some Mauser rifles from South America have mismatched bolts. Like any surplus rifle, examination by a qualified gunsmith is in order. Shooters loading cast bullets should slug their bore and size bullets accordingly. Cast bullet #311291 may be too small if the rifle's groove diameter exceeds .312" If the bore exceeds .312" diameter, cast bullet #314299 can be substituted for #311299. XMP-5744 and SR-4759 provided the best results in cast bullet testing.

**Test Components:**

Cases . . . . . .Norma
Trim-to Length . . . . . .2.100"
Primers . . . . . .Remington 9½
Primer Size . . . . . .Large Rifle
Lyman Shell Holder . . . . . .No. 2
Jacketed Bullets Used . . . . . .
Sierra SPT #2305, 125 gr. (.311")
Speer SP #2217, 150 gr. (.311")
Hornady RN #3130, 174 gr. (.312")
Sierra SPT #2310, 180 gr. (.311")
Cast Bullets Used . . . . . .(sized to .311" dia)
*gas check bullet *#311291, 170 gr.
*#311299, 200 gr.

**Test Specifications:**
**(Velocity Only)**

Firearm Used . . . . . .Argentine Mauser M1909
Barrel Length . . . . . .29"
Twist . . . . . .1-9.8"
Groove Dia. . . . . .311"

**Note:** Loads shown in shaded panels are maximum.
Loads shown in bold designate potentially most accurate load.

# 7.65 Argentine Mauser (7.65 x 53mm)

**125 gr. Jacketed SPT**
2.740" OAL
**BC:** .274
**SD:** .185

| Powder | Sugg Starting Grains | Velocity fps | Pressure | Max Load Grains | Velocity fps | Pressure |
|---|---|---|---|---|---|---|
| IMR-3031 | 39.5 | 2527 | — | 44.0 | 2893 | — |
| H-4895 | 41.5 | 2625 | — | 46.0 | 3001 | — |
| 748 | 42.0 | 2542 | — | 46.5 | 2934 | — |
| N135 | 40.0 | 2632 | — | 44.5 | 2961 | — |
| IMR-4064 | 43.0 | 2602 | — | 47.8 | 2983 | — |
| Varget | 42.5 | 2600 | — | 47.3 | 3005 | — |
| **IMR-4320** | 42.5 | 2618 | — | **47.5** | **2943** | — |
| N140 | 43.5 | 2694 | — | 48.0 | 3017 | — |

**150 gr. Jacketed SP**
2.815" OAL
**BC:** .411
**SD:** .222

| Powder | Sugg Starting Grains | Velocity fps | Pressure | Max Load Grains | Velocity fps | Pressure |
|---|---|---|---|---|---|---|
| **IMR-3031** | 38.0 | 2388 | — | **42.5** | **2680** | — |
| H-4895 | 39.0 | 2375 | — | 43.5 | 2683 | — |
| IMR-4064 | 40.5 | 2402 | — | 45.0 | 2715 | — |
| Varget | 40.0 | 2406 | — | 44.5 | 2707 | — |
| IMR-4320 | 41.0 | 2429 | — | 45.5 | 2750 | — |
| N140 | 40.5 | 2456 | — | 45.2 | 2721 | — |
| RX15 | 41.0 | 2497 | — | 45.5 | 2740 | — |
| 760 | 44.5 | 2425 | — | 49.0 | 2635 | — |

**174 gr. Jacketed RN**
2.820" OAL
**BC:** .262
**SD:** .255

| Powder | Sugg Starting Grains | Velocity fps | Pressure | Max Load Grains | Velocity fps | Pressure |
|---|---|---|---|---|---|---|
| IMR-4895 | 38.5 | 2255 | — | 42.7 | 2514 | — |
| IMR-4064 | 39.5 | 2250 | — | 43.8 | 2510 | — |
| Varget | 39.5 | 2329 | — | 43.7 | 2576 | — |
| IMR-4320 | 40.0 | 2314 | — | 44.5 | 2573 | — |
| N140 | 39.0 | 2285 | — | 43.4 | 2519 | — |
| **RX15** | **39.5** | **2333** | — | 44.0 | 2572 | — |
| 760 | 43.0 | 2243 | — | 47.5 | 2495 | — |

**180 gr. Jacketed SPT**
2.875" OAL
**BC:** .411
**SD:** .266

| Powder | Sugg Starting Grains | Velocity fps | Pressure | Max Load Grains | Velocity fps | Pressure |
|---|---|---|---|---|---|---|
| IMR-4895 | 38.0 | 2250 | — | 42.5 | 2545 | — |
| IMR-4064 | 39.0 | 2269 | — | 43.5 | 2525 | — |
| **Varget** | **39.0** | **2293** | — | 43.5 | 2554 | — |
| IMR-4320 | 40.0 | 2348 | — | 44.5 | 2592 | — |
| N140 | 38.5 | 2270 | — | 43.0 | 2504 | — |
| RX15 | 39.5 | 2330 | — | 44.0 | 2587 | — |
| 760 | 42.5 | 2245 | — | 47.0 | 2540 | — |

**#311291**
170 gr. (#2 Alloy) 2.820" OAL
**BC:** .202
**SD:** .249

| Powder | Sugg Starting Grains | Velocity fps | Pressure | Max Load Grains | Velocity fps | Pressure |
|---|---|---|---|---|---|---|
| 2400 | 15.0 | 1507 | — | 19.0 | 1787 | — |
| **SR-4759** | 15.5 | 1514 | — | **22.0** | **1972** | — |
| IMR-4227 | 18.0 | 1547 | — | 23.5 | 1937 | — |
| XMP-5744 | 18.0 | 1520 | — | 25.5 | 1983 | — |
| IMR-4198 | 18.0 | 1528 | — | 25.5 | 1957 | — |
| N133 | 24.0 | 1658 | — | 28.0 | 1909 | — |
| RX7 | 19.0 | 1562 | — | 27.0 | 2004 | — |

**#311299**
200 gr. (#2 Alloy) 3.000" OAL
**BC:** .377
**SD:** .299

| Powder | Sugg Starting Grains | Velocity fps | Pressure | Max Load Grains | Velocity fps | Pressure |
|---|---|---|---|---|---|---|
| 2400 | 15.5 | 1474 | — | 19.5 | 1713 | — |
| SR-4759 | 15.5 | 1448 | — | 22.0 | 1888 | — |
| IMR-4227 | 19.0 | 1571 | — | 25.0 | 1923 | — |
| **XMP-5744** | 17.5 | 1444 | — | **25.0** | **1920** | — |
| IMR-4198 | 18.5 | 1482 | — | 26.0 | 1916 | — |
| N133 | 25.0 | 1515 | — | 29.5 | 1878 | — |
| RX7 | 23.0 | 1606 | — | 27.0 | 1908 | — |

**Note:** Loads shown in shaded panels are maximum.
Loads shown in bold designate potentially most accurate load.

# 303 British

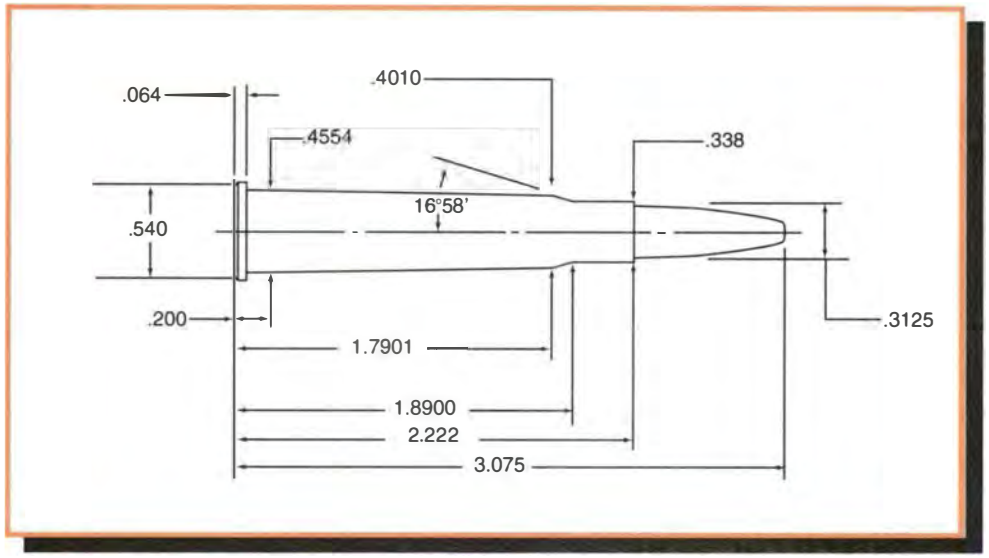


**Comments:**

The 303 British is another cartridge that owes its popularity to inexpensive, surplus rifles. This round should not be confused with the long obsolete 303 Savage. The 303 has seen extensive use as both a hunting and military cartridge around the world, especially in the vast reaches of the former British Empire. Great Britain adopted the 303 in 1888. Unlike most other small bore cartridges developed at this time, the 303 was originally loaded with compressed black powder and a 215-grain bullet around 2,000 feet per second. This loading changed to the smokeless Cordite propellant just four years later. The cartridge was altered again in 1910 with a 174-grain flat-base spitzer traveling approximately 2,550 feet per second. The newly designated MK VII cartridge served until its replacement by the 7.62 NATO in 1957.

The majority of 303 rifles encountered are of the Short Magazine Lee Enfield design (SMLE). Their fast-working action and 10-round magazine made them a formidable battle rifle throughout both World Wars. Unfortunately, "Enfields" as they are known are not an overly strong design. The rear locking lugs on these rifles do not provide the strong lockup as the front locking lugs found on firearms such as the Mauser 98 or Model 70 Winchester. The SAAMI Maximum Average Pressure (MAP) is set at 45,000 CUP in deference to this fact. Most major manufacturers currently offer factory ammunition with the 180-grain bullet being the most common. Surplus ammunition is quite plentiful but is usually berdan primed and corrosive. Ballistics of the 303 British are generally regarded as a step above the 30-40 Krag. Careful handloading increases the flexibility of the 303 as long as the shooter follows certain cautions. Persistent use of maximum loads in SMLE rifles will reduce case life expectancy considerably. Reloaders should pay close attention to the length of resized cases and trim when necessary. The generous chamber dimensions encountered in many SMLE rifles only compound this situation. Shooters should pay close attention for incipient case separation when sizing and trimming.

Enfields have been a popular surplus item over the years. Their production span covered over fifty years and four continents. Condition of these rifles vary from unissued to unusable and everywhere in between. Rifles should be checked over by a qualified gunsmith before firing. Rifles chambered in 303 sometimes contain extreme groove variation. While most rifles usually run around .312" or .313", some have measured as low as .308"and others as high as .317" Those reloading for an undersized bore can use cast bullet #311299 in place of #314299. Slug the bore and size accordingly. Varget and Reloder 15 produced very good accuracy with the heavier jacketed bullets in our test rifle. Lighter bullets responded to IMR-3031 but individual rifles may have different preferences. SR-4759 and XMP-5744 gave best results during cast bullet testing.

**Test Components:**

Cases . . . . . .Remington
Trim-to Length . . . . . .2.212"
Primers . . . . . .Federal 210
Primer Size . . . . . .Large Rifle
Lyman Shell Holder . . . . . .No. 7
Jacketed Bullets Used . . . . . .
Sierra SPT #2305, 125 gr. (.311")
Hornady SP #3120, 150 gr. (.312")
Hornady RN #3130, 174 gr. (.312")
Sierra SPT #2310, 180 gr. (.311")
Cast Bullets Used . . . . . .(sized to .313" dia)
*gas check bullet *#314299, 200 gr.

**Test Specifications:**
**(Velocity Only)**

Firearm Used . . . . . .Enfield #1 MK III*
Barrel Length . . . . . .25¼"
Twist . . . . . .1-10"
Groove Dia. . . . . .313"

# 303 British

**125 gr. Jacketed SPT**
2.900" OAL
**BC:** .274
**SD:** .185

| Powder | Sugg Starting Grains | Velocity fps | Pressure | Max Load Grains | Velocity fps | Pressure |
|---|---|---|---|---|---|---|
| **IMR-3031** | 38.5 | 2305 | — | **42.8** | **2720** | — |
| H4895 | 39.0 | 2322 | — | 43.5 | 2713 | — |
| 748 | 41.0 | 2253 | — | 45.3 | 2709 | — |
| N135 | 39.0 | 2350 | — | 43.5 | 2714 | — |
| IMR-4064 | 41.5 | 2343 | — | 46.0+ | 2709 | — |
| N140 | 41.0 | 2410 | — | 45.5 | 2712 | — |
| RX15 | 41.5 | 2469 | — | 46.3 | 2784 | — |

**150 gr. Jacketed SP**
2.975" OAL
**BC:** .361
**SD:** .220

| Powder | Sugg Starting Grains | Velocity fps | Pressure | Max Load Grains | Velocity fps | Pressure |
|---|---|---|---|---|---|---|
| **IMR-3031** | 37.0 | 2236 | — | **41.5** | **2605** | — |
| H4895 | 38.0 | 2254 | — | 42.0 | 2572 | — |
| 748 | 39.0 | 2149 | — | 43.5 | 2523 | — |
| IMR-4064 | 39.0 | 2212 | — | 44.0 | 2570 | — |
| IMR-4320 | 39.5 | 2298 | — | 44.0 | 2604 | — |
| N140 | 39.0 | 2173 | — | 43.3 | 2503 | — |
| RX15 | 40.0 | 2335 | — | 44.5 | 2580 | — |
| AA2700 | 43.0 | 2100 | — | 48.0 | 2432 | — |
| H414 | 43.0 | 2211 | — | 48.0 | 2510 | — |

**174 gr. Jacketed RN**
2.945" OAL
**BC:** .262
**SD:** .255

| Powder | Sugg Starting Grains | Velocity fps | Pressure | Max Load Grains | Velocity fps | Pressure |
|---|---|---|---|---|---|---|
| IMR-4895 | 37.0 | 2032 | — | 41.0 | 2341 | — |
| IMR-4064 | 37.0 | 1981 | — | 41.5 | 2308 | — |
| Varget | 38.0 | 1993 | — | 42.0 | 2333 | — |
| IMR-4320 | 38.0 | 2043 | — | 42.0 | 2361 | — |
| N140 | 37.5 | 2021 | — | 41.8 | 2313 | — |
| **RX15** | 38.0 | 2107 | — | **42.0** | **2367** | — |
| AA2700 | 41.0 | 1945 | — | 45.5 | 2233 | — |
| H414 | 41.5 | 1978 | — | 46.3 | 2297 | — |

**180 gr. Jacketed SPT**
3.075" OAL
**BC:** .411
**SD:** .266

| Powder | Sugg Starting Grains | Velocity fps | Pressure | Max Load Grains | Velocity fps | Pressure |
|---|---|---|---|---|---|---|
| IMR-4895 | 36.5 | 2020 | — | 40.5 | 2286 | — |
| IMR-4064 | 37.5 | 2040 | — | 41.5 | 2307 | — |
| **Varget** | 37.5 | 1987 | — | **41.7** | **2306** | — |
| IMR-4320 | 37.5 | 2046 | — | 41.5 | 2309 | — |
| N140 | 37.5 | 2067 | — | 41.7 | 2317 | — |
| **RX15** | 38.0 | 2125 | — | **42.0** | **2376** | — |
| AA2700 | 41.5 | 1994 | — | 45.5 | 2239 | — |
| H414 | 41.5 | 2008 | — | 46.0 | 2263 | — |

**#314299**
200 gr. (#2 Alloy) 2.930" OAL
**BC:** .377
**SD:** .292

| Powder | Sugg Starting Grains | Velocity fps | Pressure | Max Load Grains | Velocity fps | Pressure |
|---|---|---|---|---|---|---|
| Unique | 11.0 | 1310 | — | 14.5 | 1549 | — |
| 2400 | 15.5 | 1404 | — | 20.0 | 1713 | — |
| **SR-4759** | **18.0** | **1561** | — | 24.5 | 1953 | — |
| IMR-4227 | 20.0 | 1555 | — | 26.5 | 1953 | — |
| XMP-5744 | 21.0 | 1566 | — | 27.5 | 1942 | — |
| IMR-4198 | 21.0 | 1565 | — | 28.0 | 1946 | — |

**Note:** Loads shown in shaded panels are maximum.
Loads shown in bold designate potentially most accurate load.
\+ Designates a compressed powder charge.

# 32-20 Winchester (32 WCF)

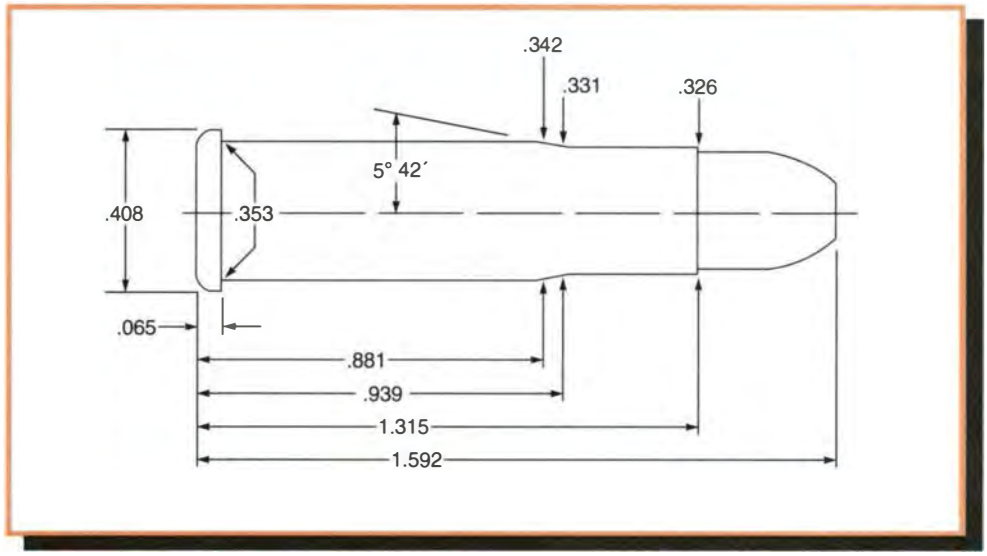


**Comments:**

The 32-20 dates back to 1882 when Winchester first offered it in the Model 1873 rifle. The cartridge has drifted in and out of popularity depending on who chambered it at any given time. Most manufacturers produced rifles in 32-20 at some point. It has been periodically produced in revolvers and more lately in the T/C Contender. Cowboy Action Shooting and Marlin's recent production of their Model 1894 in 32-20 have kept it going. The 32-20 also served as the parent cartridge for the 25-20 and the 218 Bee.

Factory ammunition with cases under the trim-to length has been encountered. This will cause no problem as long as they are segregated and the seating die adjusted to their particular length. Cartridges intended for tubular magazines should only be loaded with flat or blunt nosed bullets and crimped in place. Both bullets listed in data section are suitable for tubular magazines and are designed to perform at 32-20 velocity levels. Shooters need to be careful when seating bullets in the 32-20. Case neck walls are very thin, only .006" to .007" on average. An improperly adjusted seating die can lead to crushed cases. Seating and crimping in two separate steps will eliminate much of this aggravation. SAAMI established the Maximum Average Pressure (MAP) for the 32-20 at 16,000 CUP.

**This data is not for use in older firearms originally designed for black powder or in handguns. Use only in modern firearms in good condition.**

**Test Components:**

Cases . . . . . .Winchester
Trim-to Length . . . . . .1.305"
Primers . . . . . .Winchester WSR
Primer Size . . . . . .Small Rifle
Lyman Shell Holder . . . . . .No. 10
Jacketed Bullets Used . . . . .Speer JHP #3981, 100 gr.
Cast Bullets Used . . . . . .(sized to .312" dia) #311008, 115 gr.

**Test Specifications: (Velocity & Pressure)**

Firearm Used . . . . . .Universal Receiver
Barrel Length . . . . . .14"
Twist . . . . . .1-20"
Groove Dia. . . . . .311"

**100 gr. Jacketed HP** 1.560" OAL — **BC:** .167 **SD:** .147

| Powder | Sugg Starting Grains | Velocity fps | Pressure C.U.P. | Max Load Grains | Velocity fps | Pressure C.U.P. |
|---|---|---|---|---|---|---|
| 2400 | 6.8 | 1029 | 9,700 | 8.5 | 1280 | 15,800 |
| IMR-4227 | 7.8 | 961 | 10,200 | 9.8 | 1181 | 15,200 |
| AA1680 | 11.5 | 1154 | 8,000 | 12.5 | 1295 | 14,200 |
| **IMR-4198** | **11.0** | **1122** | **10,100** | 13.6+ | 1388 | 16,000 |
| RX7 | 13.0 | 1086 | 6,700 | 16.3 | 1508 | 15,500 |

**#311008** 115 gr. (#2 Alloy) 1.590" OAL — **BC:** .154 **SD:** .169

| Powder | Sugg Starting Grains | Velocity fps | Pressure C.U.P. | Max Load Grains | Velocity fps | Pressure C.U.P. |
|---|---|---|---|---|---|---|
| Unique | 3.6 | 943 | 10,400 | 4.5 | 1117 | 16,000 |
| **2400** | **6.6** | **1043** | **10,900** | 8.3 | 1239 | 15,000 |
| IMR-4227 | 7.8 | 972 | 11,400 | 9.7 | 1171 | 15,800 |
| AA1680 | 11.0 | 1083 | 9,300 | 13.0 | 1332 | 15,600 |
| IMR-4198 | 10.0 | 1019 | 8,900 | 12.4 | 1272 | 15,300 |
| RX7 | 12.4 | 1038 | 6,500 | 15.5 | 1405 | 16,000 |

**Note:** Loads shown in shaded panels are maximum.
Loads shown in bold designate potentially most accurate load.
\+ Designates a compressed powder charge.

# 32 Winchester Special

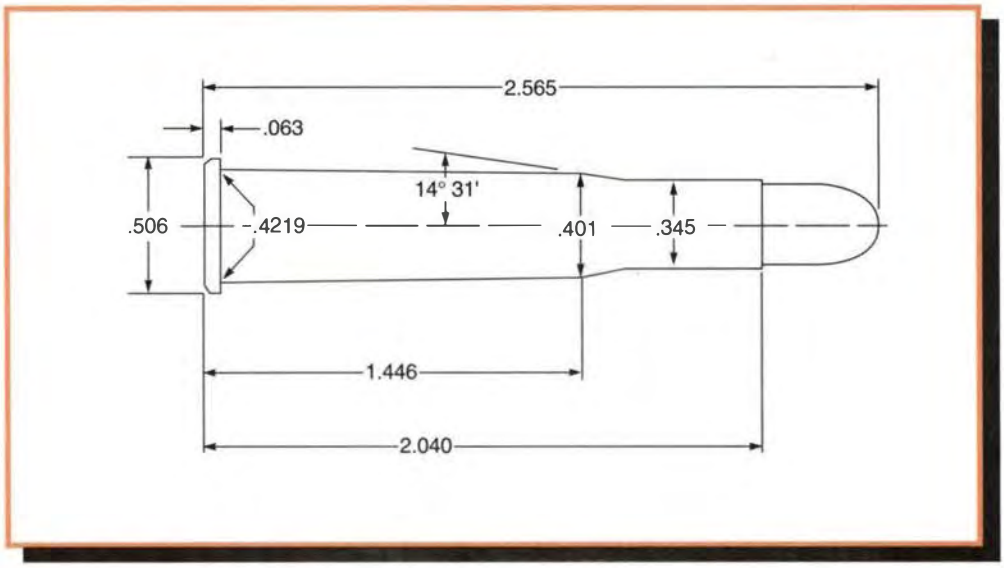


**Comments:**

The 32 Winchester Special is little more than the 30-30 necked up to .321" diameter bullets. It should not be confused with the 32 WCF (a.k.a. 32-20). The history of the 32 Special has been the subject of debate for some time. Smokeless powder was not yet widely available to reloaders in the late nineteenth century. Some sources argue the 32 Special was equipped with its 1-16" twist to enable factory cartridges to be reloaded with black powder. Others speculate the wide availability of 32-caliber rifle bullets in contrast to the then new 30-caliber led to these two very similar cartridges. Nevertheless, the 32 Special never achieved the universal acceptance enjoyed by the 30-30 and 32-caliber rifles gradually lost ground to 30-caliber cartridges. Winchester discontinued the 32 Special chambering many years ago but the cartridge still has its followers. Winchester and Federal both currently list a single 170-grain factory load. Shooters should carefully check all case lengths for uniformity before reloading. Any procedure applicable to loading the 30-30 will apply here.

**Test Components:**

Cases . . . . . .Remington
Trim-to Length . . . . . .2.030"
Primers . . . . . .Remington 9½
Primer Size . . . . . .Large Rifle
Lyman Shell Holder . . . . . .No. 6
Jacketed Bullets Used . . . .Hornady FP #3210, 170 gr.

**Test Specifications:**
**(Velocity Only)**

Firearm Used . . . . . .Winchester Model 94
Barrel Length . . . . . .20"
Twist . . . . . .1-16"
Groove Dia. . . . . .321"

**170 gr. Jacketed FP**
2.605" OAL
**BC:** .249
**SD:** .236

| Powder | Sugg Starting Grains | Velocity fps | Pressure | Max Load Grains | Velocity fps | Pressure |
|---|---|---|---|---|---|---|
| IMR-4198 | 24.0 | 1956 | — | 27.0 | 2150 | — |
| **RX7** | **28.0** | **2123** | — | 31.0 | 2283 | — |
| IMR-3031 | 28.0 | 1912 | — | 31.0 | 2159 | — |
| IMR-4895 | 28.0 | 1792 | — | 33.0 | 2136 | — |
| IMR-4064 | 28.0 | 1685 | — | 33.0 | 2070 | — |
| IMR-4320 | 31.0 | 1908 | — | 35.0 | 2169 | — |
| H-380 | 36.0 | 1945 | — | 39.0 | 2109 | — |

**Note:** Loads shown in shaded panels are maximum.
Loads shown in bold designate potentially most accurate load.

# 8mm Mauser (8 x 57mm JS) (7.9 x 57mm)

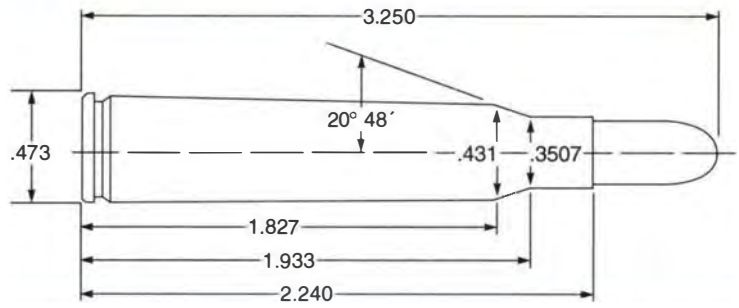


**Comments:**

This data is for use in rifles chambered only for the 8x57mm JS (a.k.a. 7.9x57 or 7.92x57) German military cartridge with the .323" diameter bullet. It is not for use in any rifle with the older .318" J-bore. The 8mm Mauser has caused no end of confusion to American shooters. This cartridge had its birth not from *Waffenfabrik Mauser* but from the Model 88 Commission rifle adopted by the German Infantry Board in 1888. This cartridge was originally loaded with a .318" diameter, 226-grain round nose bullet at 2100 feet per second and replaced the 11mm black powder cartridge in use since the 1870s. The German military revised it in 1905 with a .323" diameter bullet weighing 154-grains at nearly 2900 feet per second. This revolutionized small arms ballistics and prodded the United States Army to revise the just adopted 30-03 cartridge into what we now know as the 30-06. Military ordnance departments around the world scrambled to follow suit. All German military rifles manufactured since 1905 have the .323" diameter JS-bore. However, German gunmakers continued to produce .318" J-bore sporting rifles for the civil market in the post-World War One era due to the Versailles Treaty's restrictions of military arms production by German companies. Moreover, many Model 88 rifles reportedly were rechambered to accept the new .323" JS cartridge but retained the original .318" barrel — confused yet?

American shooters first became acquainted with the 8x57 immediately following World War Two when many GIs returned home bearing newly liberated K98 rifles. The lack of suitable boxer primed cases led to the development of the 8mm-06 wildcat, which remained popular for many years. Large numbers of surplus rifles produced by various manufacturers have also been imported even up to the present day. Surplus ammunition is still common but is usually berdan primed and corrosive. Eventually, the major suppliers produced 8x57 ammunition and reloading components, which are readily available. The 8x57 is often compared with the 30-06. However, SAAMI established a Maximum Average Pressure of 35,000 PSI for the 8x57 JS-bore in light of the real possibility of .323" cartridges being inadvertently chambered in .318" J-bore rifles. Ammunition offered by European manufacturers not confused by such designations has been loaded to the full ballistic potential that this cartridge is capable of.

Variations of the basic Model 98 Mauser were produced in very large quantities in different locales over a nearly fifty-year period. Quality of materials and workmanship will vary. Some are pristine while others show the rough finish of wartime production. Still others were produced by forced labor or under occupation. Shooters can encounter some specimens of dubious origin, which have manufacturers codes, or other identification marks removed. However, those with an 8x57 Mauser given a clean bill of health by a qualified gunsmith can get the most out of their rifles by careful handloading. Bullet selection is not nearly as extensive as for 30-caliber or even the 7mm but handloaders should be able to find a bullet to suit their needs. The 220-grain Hornady bullet was designed for the 8mm Remington Magnum and may not expand well at the 8x57's performance level. IMR-4895, IMR-4350 and IMR-4064 have all been used to good effect in the 8x57. Reloder 7, SR-4759, and XMP-5744 are good powder choices for cast bullets.

**Test Components:**

Cases . . . . . .Winchester and Federal
Trim-to Length . . . . . .2.230"
Primers . . . . . .Remington 9½ and Federal 210
Primer Size . . . . . .Large Rifle
Lyman Shell Holder . . . . . .No. 2
Jacketed Bullets Used . . . .Hornady SP #3230, 125 gr.
Speer SP #2277, 150 gr.
Hornady RN #3235, 170 gr.
Hornady SP #3238, 220 gr.
Cast Bullets Used . . . . . .(sized to .323" dia)
*gas check bullet *#323470, 165 gr.

**Test Specifications:**
**(Velocity & Pressure)**

Firearm Used . . . . . .Mauser 98 and Universal Receiver
Barrel Length . . . . . .Mauser 98 - 23"
Universal Receiver - 26"
Twist . . . . . .Mauser 98 - 1-9¼"
Universal Receiver - 1-9½"
Groove Dia. . . . . .323"

# 8mm Mauser (8 x 57mm JS) (7.9 x 57mm)

**125 gr. Jacketed SP** — 2.875" OAL — **BC:** .246 **SD:** .171

| Powder | Sugg Starting Grains | Velocity fps | Pressure | Max Load Grains | Velocity fps | Pressure |
|---|---|---|---|---|---|---|
| IMR-3031 | 46.0 | 2865 | — | 51.0+ | 3184 | — |
| IMR-4895 | 50.0 | 2898 | — | 53.0+ | 3194 | — |
| 748 | 51.0 | 2813 | 32,800 | 58.0+ | 3063 | 35,100 C |
| **N135** | 46.0 | 2793 | 35,200 | **51.0** | **3059** | **46,600 P** |
| IMR-4064 | 49.0 | 2840 | — | 54.0+ | 3125 | — |
| IMR-4320 | 50.0 | 2824 | — | 55.0+ | 3105 | — |
| RX15 | 49.5 | 2811 | 37,300 | 55.0+ | 3098 | 48,100 P |
| H-380 | 50.5 | 2557 | 25,900 | 56.0+ | 2803 | 32,900 P |
| AA2700 | 52.0 | 2610 | 30,000 | 58.0+ | 2827 | 36,500 P |
| 760 | 51.0 | 2493 | 27,500 | 58.0+ | 2739 | 32,400 C |
| H-414 | 50.0 | 2519 | 26,700 | 57.0+ | 2791 | 32,900 C |
| IMR-4350 | 50.0 | 2421 | — | 56.0+ | 2717 | — |

**150 gr. Jacketed SP** — 2.945" OAL — **BC:** .369 **SD:** .205

| Powder | Sugg Starting Grains | Velocity fps | Pressure | Max Load Grains | Velocity fps | Pressure |
|---|---|---|---|---|---|---|
| IMR-4895 | 44.0 | 2476 | 34,400 | 49.2 | 2795 | 47,200 P |
| 748 | 47.0 | 2625 | 37,800 | 52.0 | 2858 | 47,400 P |
| IMR-4064 | 46.0 | 2522 | 35,600 | 51.0 | 2844 | 48,700 P |
| Varget | 45.0 | 2562 | 37,000 | 50.0 | 2820 | 47,800 P |
| IMR-4320 | 48.0 | 2577 | — | 53.0+ | 2865 | — |
| N140 | 45.5 | 2529 | 37,000 | 50.5 | 2771 | 46,600 P |
| RX15 | 45.0 | 2541 | 36,500 | 50.2 | 2816 | 48,100 P |
| H-380 | 53.0 | 2652 | 38,000 | 59.0+ | 2827 | 43,500 P |
| **AA2700** | 52.0 | 2624 | 37,800 | **58.0+** | **2818** | **44,400 P** |
| 760 | 47.5 | 2316 | 28,200 | 54.0+ | 2605 | 36,800 C |
| H-414 | 47.5 | 2394 | 30,300 | 54.0+ | 2692 | 36,900 C |
| IMR-4350 | 50.0 | 2347 | — | 56.0+ | 2652 | — |

**170 gr. Jacketed RN** — 2.850" OAL — **BC:** .217 **SD:** .233

| Powder | Sugg Starting Grains | Velocity fps | Pressure | Max Load Grains | Velocity fps | Pressure |
|---|---|---|---|---|---|---|
| IMR-4895 | 42.5 | 2368 | 36,400 | 47.5 | 2633 | 48,500 P |
| 748 | 40.5 | 2187 | 28,100 | 46.0 | 2437 | 34,400 C |
| IMR-4064 | 43.5 | 2313 | 33,600 | 48.5 | 2624 | 47,200 P |
| Varget | 43.0 | 2415 | 38,000 | 48.0 | 2646 | 48,200 P |
| IMR-4320 | 46.0 | 2421 | — | 51.0+ | 2710 | — |
| N140 | 43.0 | 2350 | 36,600 | 47.7 | 2586 | 47,500 P |
| **RX15** | 43.5 | 2377 | 36,300 | **48.5** | **2627** | **47,200 P** |
| N150 | 44.5 | 2430 | 39,100 | 49.5 | 2644 | 48,500 P |
| 760 | 43.0 | 2100 | 28,100 | 49.0 | 2302 | 35,000 C |
| H-380 | 48.0 | 2371 | 34,500 | 53.0+ | 2594 | 43,300 P |
| IMR-4350 | 49.0 | 2237 | — | 54.0+ | 2518 | — |
| XMR-3100 | 49.0 | 2053 | 29,000 | 54.5+ | 2323 | 39,000 P |

**220 gr. Jacketed SP** — 3.000" OAL — **BC:** .464 **SD:** .301

| Powder | Sugg Starting Grains | Velocity fps | Pressure | Max Load Grains | Velocity fps | Pressure |
|---|---|---|---|---|---|---|
| IMR-4895 | 34.5 | 1841 | 31,800 | 39.0 | 2081 | 36,000 C |
| IMR-4064 | 35.0 | 1817 | 29,300 | 40.0 | 2087 | 35,800 C |
| IMR-4320 | 36.0 | 1867 | 35,200 | 41.0 | 2086 | 37,000 C |
| H-380 | 37.0 | 1810 | 27,000 | 42.0 | 2107 | 35,900 C |
| 760 | 39.5 | 1798 | 27,200 | 45.0 | 2100 | 37,000 C |
| **IMR-4350** | 39.5 | 1787 | 27,700 | **45.0+** | **2056** | **35,800 C** |
| XMR-3100 | 44.0 | 1810 | 30,300 | 49.0+ | 2008 | 37,400 P |
| RX19 | 45.0 | 1970 | 35,300 | 50.0+ | 2178 | 42,800 P |

**#323470** — 165 gr. (#2 Alloy) 2.730" OAL — **BC:** .187 **SD:** .226

| Powder | Sugg Starting Grains | Velocity fps | Pressure | Max Load Grains | Velocity fps | Pressure |
|---|---|---|---|---|---|---|
| SR-4759 | 20.5 | 1831 | 18,100 | 25.2 | 2139 | 30,200 C |
| **XMP-5744** | **19.0** | **1504** | **14,000** | 34.0 | 2374 | 40,300 P |
| IMR-4198 | 27.0 | 1925 | 16,700 | 35.0 | 2482 | 34,900 C |
| RX7 | 28.0 | 1917 | 16,900 | 40.0 | 2527 | 33,700 C |
| H-4895 | 31.0 | 1957 | 18,600 | 37.5 | 2330 | 28,200 C |

**Note:** Loads shown in shaded panels are maximum.
Loads shown in bold designate potentially most accurate load.
\+ Designates a compressed powder charge.
In pressure column, C=Copper Units of Pressure (CUP); P=Pounds per Square Inch (PSI)

# 8mm Remington Magnum

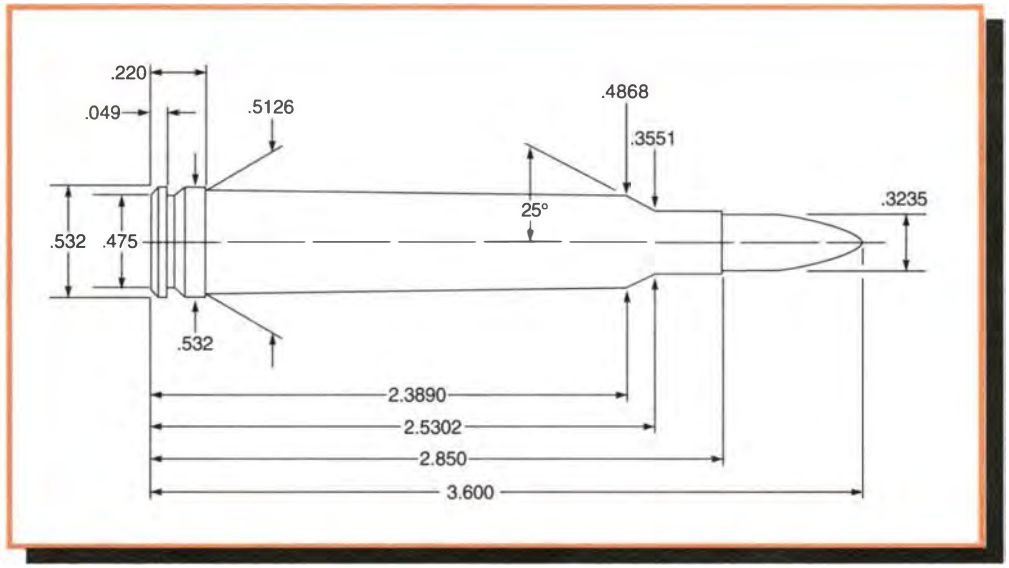


**Comments:**

This was Remington's answer to the 338 Winchester Magnum. With its larger case (a necked down 375 H&H) it offered greater potential; but nevertheless it never became popular. This may be due to the fact that its hunting use is limited to the heaviest North American game. Or perhaps as some found the original factory bullets were really too soft for use on heavy rugged game.

In any event when properly loaded with a good premium grade bullet the 8mm Remington is a cartridge that can handle almost any situation to be encountered in North America. And it will do nicely for much of the African plains game.

With standard bullets it will perform well in non-demanding situations.

This round is at its best with a good 220 grain bullet and loaded with Hercules Reloder 22.

**Test Components:**

Cases . . . . . .Remington
Trim-to Length . . . . . .2.840"
Primers . . . . . .CCI 250
Primer Size . . . . . .Large Rifle, Magnum
Lyman Shell Holder . . . . . .No. 13
Jacketed Bullets Used . . . . . .Speer SP #2277, 150 gr.
Hornady RN #3235, 170 gr.
Sierra SPT #2410, 175 gr.
Nosler Ballistic Tip #32180, 180 gr.
Hornady SP #3238, 220 gr.
Cast Bullets Used . . . . . .(sized to .323" dia)
*gas check bullet *#323470, 165 gr.

**Test Specifications:**
**(Velocity & Pressure)**

Firearm Used . . . . . .Universal Receiver
Barrel Length . . . . . .24"
Twist . . . . . .1-10"
Groove Dia. . . . . .323"

**150 gr. Jacketed SP** — **BC:** .369 **SD:** .205
3.580" OAL

| Powder | Sugg Starting Grains | Velocity fps | Pressure C.U.P. | Max Load Grains | Velocity fps | Pressure C.U.P. |
|---|---|---|---|---|---|---|
| IMR-4895 | 57.0 | 2821 | 35,200 | 64.0 | 3143 | 51,300 |
| IMR-4320 | 57.5 | 2767 | 34,700 | 66.0 | 3126 | 52,300 |
| H-380 | 65.0 | 2805 | 34,300 | 75.0 | 3198 | 53,600 |
| 760 | 71.0 | 3045 | 43,800 | 80.0 | 3294 | 52,900 |
| H-414 | 68.0 | 3042 | 42,700 | 77.0 | 3272 | 51,700 |
| **IMR-4350** | 74.0 | 3102 | 41,800 | **80.0** | **3348** | **50,700** |
| RX19 | 80.0 | 3070 | 41,600 | 89.0 | 3500 | 53,700 |
| XMR-3100 | 81.0 | 3014 | 41,400 | 90.0+ | 3411 | 53,800 |
| H-4831 | 80.0 | 3144 | 41,200 | 86.5 | 3382 | 50,000 |

**170 gr. Jacketed RN** — **BC:** .217 **SD:** .233
3.440" OAL

| Powder | Sugg Starting Grains | Velocity fps | Pressure C.U.P. | Max Load Grains | Velocity fps | Pressure C.U.P. |
|---|---|---|---|---|---|---|
| H-414 | 71.5 | 2955 | 44,300 | 78.0 | 3181 | 53,000 |
| IMR-4350 | 70.0 | 2919 | 42,900 | 76.5 | 3177 | 52,000 |
| **RX19** | 77.0 | 2921 | 42,300 | **85.5** | **3323** | **53,900** |
| XMR-3100 | 76.5 | 2806 | 37,700 | 85.7+ | 3206 | 53,200 |
| H-4831 | 78.0 | 2979 | 43,000 | 84.5 | 3257 | 52,300 |
| WXR | 78.0 | 2854 | 42,400 | 86.5+ | 3241 | 53,900 |
| RX22 | 81.5 | 3004 | 40,600 | 87.3+ | 3296 | 51,300 |
| IMR-7828 | 83.0 | 2977 | 43,100 | 90.0+ | 3261 | 52,100 |
| RX25 | 83.0 | 2822 | 39,000 | 92.0+ | 3227 | 50,000 |
| AA8700 | 92.5 | 2908 | 41,400 | 102.4+ | 3155 | 50,200 |

**Note:** Loads shown in shaded panels are maximum.
Loads shown in bold designate potentially most accurate load.
\+ Designates a compressed powder charge.

# 8mm Remington Magnum

**175 gr. Jacketed SPT**
3.585" OAL
**BC:** .381
**SD:** .240

| Powder | Sugg Starting Grains | Velocity fps | Pressure C.U.P. | Max Load Grains | Velocity fps | Pressure C.U.P. |
|---|---|---|---|---|---|---|
| H-414 | 69.0 | 2889 | 45,000 | 75.6 | 3099 | 52,400 |
| IMR-4350 | 71.6 | 2871 | 41,100 | 77.5 | 3178 | 52,700 |
| **RX19** | 75.0 | 2852 | 42,100 | **83.3+** | **3210** | **52,800** |
| XMR-3100 | 77.0 | 2851 | 41,000 | 83.5+ | 3159 | 52,800 |
| H-4831 | 75.3 | 2843 | 42,100 | 82.0 | 3131 | 53,000 |
| WXR | 78.0 | 2805 | 40,300 | 86.0 | 3175 | 53,200 |
| RX22 | 81.5 | 3034 | 42,500 | 87.2+ | 3305 | 52,200 |
| IMR-7828 | 78.5 | 2812 | 39,100 | 86.3+ | 3216 | 52,500 |
| RX25 | 84.0 | 2848 | 43,300 | 91.5+ | 3210 | 52,800 |
| AA8700 | 92.5 | 2920 | 42,500 | 102.4+ | 3196 | 51,800 |

**180 gr. Jacketed Ballistic Tip**
3.595" OAL
**BC:** .394
**SD:** .247

| Powder | Sugg Starting Grains | Velocity fps | Pressure C.U.P. | Max Load Grains | Velocity fps | Pressure C.U.P. |
|---|---|---|---|---|---|---|
| H-414 | 67.0 | 2706 | 42,300 | 74.0 | 3082 | 54,000 |
| IMR-4350 | 70.0 | 2777 | 43,400 | 77.0 | 3164 | 54,000 |
| RX19 | 74.0 | 2802 | 42,200 | 82.0 | 3157 | 53,600 |
| XMR-3100 | 74.5 | 2721 | 41,100 | 82.5 | 3086 | 53,900 |
| H-4831 | 73.0 | 2796 | 41,100 | 81.0 | 3196 | 53,600 |
| WXR | 77.0 | 2855 | 44,000 | 85.0 | 3197 | 54,000 |
| **RX22** | 78.0 | 2823 | 42,600 | **86.0** | **3191** | **53,400** |
| IMR-7828 | 77.0 | 2749 | 42,100 | 85.0 | 3138 | 53,800 |
| RX25 | 81.0 | 2869 | 44,100 | 90.0+ | 3246 | 54,000 |
| H1000 | 83.0 | 2835 | 42,700 | 92.0+ | 3152 | 54,000 |
| AA8700 | 88.0 | 2644 | 40,900 | 97.5+ | 2928 | 53,200 |

**220 gr. Jacketed SP**
3.597" OAL
**BC:** .464
**SD:** .301

| Powder | Sugg Starting Grains | Velocity fps | Pressure C.U.P. | Max Load Grains | Velocity fps | Pressure C.U.P. |
|---|---|---|---|---|---|---|
| IMR-4350 | 65.4 | 2579 | 43,800 | 73.0 | 2819 | 52,800 |
| RX19 | 70.0 | 2610 | 42,600 | 77.6 | 2917 | 53,800 |
| XMR-3100 | 72.5 | 2600 | 42,800 | 79.0+ | 2860 | 53,600 |
| H-4831 | 66.0 | 2473 | 40,700 | 74.0 | 2734 | 51,600 |
| WXR | 71.0 | 2606 | 43,700 | 79.0 | 2862 | 53,700 |
| **RX22** | 73.5 | 2673 | 40,600 | **79.5+** | **2939** | **51,800** |
| IMR-7828 | 73.0 | 2596 | 40,300 | 80.0+ | 2888 | 50,800 |
| RX25 | 75.0 | 2556 | 40,700 | 83.5+ | 2934 | 53,600 |
| AA8700 | 87.0 | 2662 | 43,100 | 94.5+ | 2885 | 50,400 |
| H870 | 84.5 | 2621 | 40,200 | 88.0+ | 2742 | 44,200 |

**#323470**
165 gr. (#2 Alloy) 3.398" OAL
**BC:** .187
**SD:** .226

| Powder | Sugg Starting Grains | Velocity fps | Pressure C.U.P. | Max Load Grains | Velocity fps | Pressure C.U.P. |
|---|---|---|---|---|---|---|
| 2400 | 24.0 | 1714 | — | 35.0 | 2313 | — |
| **SR-4759** | **23.0** | **1712** | — | 39.0 | 2469 | — |
| IMR-4227 | 24.0 | 1729 | — | 40.0 | 2432 | — |
| XMP-5744 | 24.5 | 1688 | — | 43.0 | 2532 | — |
| IMR-4198 | 26.0 | 1707 | — | 44.0 | 2471 | — |
| RX7 | 29.0 | 1655 | — | 49.0 | 2465 | — |
| H-4895 | 32.0 | 1711 | — | 50.0 | 2488 | — |

**Note:** Loads shown in shaded panels are maximum.
Loads shown in bold designate potentially most accurate load.
+ Designates a compressed powder charge.

# 338 Winchester Magnum

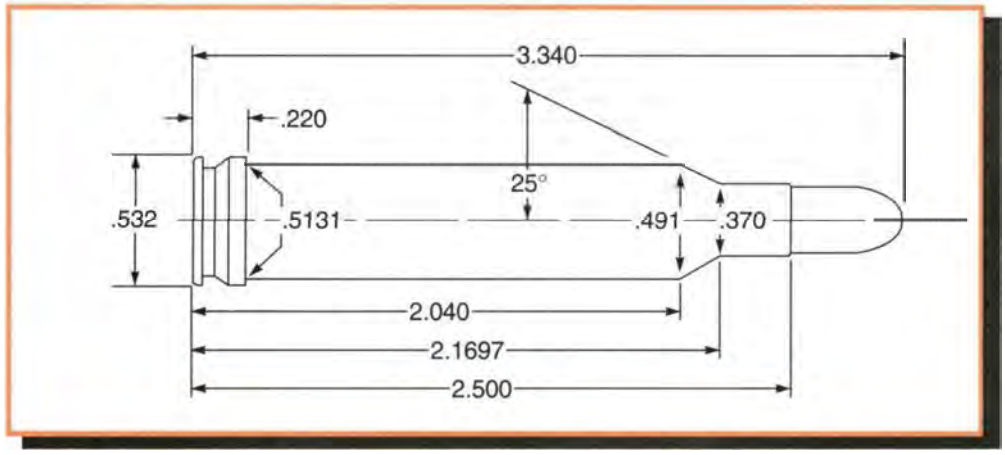


**Comments:**

This cartridge has attained classic status over the last 40 years. It started slow but gradually gained a momentum equal to its ability to handle most of the world's game.

This round is best served with a premium style bullet but for nondemanding situations many use popularly priced bullets.

Propellants that have proven very accurate include IMR 4831, Hercules Reloder 22, and IMR 7828 with all bullet weights. The shooter who really wants one cartridge for a wide variety of game, and who can see past the 30-06 mystique, would do well to learn to shoot a 338 Winchester Magnum. It has been used successfully on 30 pound duiker, 140 pound deer, giant Alaskan bear, and a lot of in between sized game around the world. It rivals the 375 H&H Magnum as being the most versatile of all big game cartridges. The 338 has the edge on lighter game whereas the 375 H&H can be pushed to the limit and used (carefully) for the likes of African cape buffalo.

**Test Components:**

Cases . . . . . .Winchester
Trim-to Length . . . . . .2.490"
Primers . . . . . .Remington 9½ M
Primer Size . . . . . .Large Rifle, Magnum
Lyman Shell Holder . . . . . .No. 13
Jacketed Bullets Used . . . . . .Speer SP #2405, 200 gr.
Hornady SP #3320, 225 gr.
Hornady RN #3330, 250 gr.

**Test Specifications: (Velocity Only)**

Firearm Used . . . . . .Winchester Model 70
Barrel Length . . . . . .24"
Twist . . . . . .1-10"
Groove Dia. . . . . .336"

**200 gr. Jacketed SP** — 3.340" OAL — BC: .448 SD: .250

| Powder | Sugg Starting Grains | Velocity fps | Pressure | Max Load Grains | Velocity fps | Pressure |
|---|---|---|---|---|---|---|
| IMR-4350 | 69.0 | 2777 | — | 75.0+ | 3058 | — |
| RX19 | 69.0 | 2634 | — | 7 .0+ | 2968 | — |
| **IMR-4831** | 69.0 | 2664 | — | **77.5+** | **3023** | — |
| XMR-3100 | 68.0 | 2513 | — | 76.0+ | 2805 | — |
| H-4831 | 72.0 | 2652 | — | 80.0+ | 2923 | — |
| RX22 | 71.0 | 2644 | — | 79.0+ | 2932 | — |

**225 gr. Jacketed SP** — 3.310" OAL — BC: .397 SD: .281

| Powder | Sugg Starting Grains | Velocity fps | Pressure | Max Load Grains | Velocity fps | Pressure |
|---|---|---|---|---|---|---|
| IMR-4350 | 67.0 | 2597 | — | 74.0+ | 2915 | — |
| RX19 | 68.0 | 2533 | — | 75.0+ | 2795 | — |
| IMR-4831 | 68.0 | 2524 | — | 75.5+ | 2801 | — |
| XMR-3100 | 67.0 | 2386 | — | 74.0+ | 2616 | — |
| H-4831 | 70.0 | 2493 | — | 78.0+ | 2797 | — |
| IMR-7828 | 68.0 | 2306 | — | 76.0+ | 2602 | — |
| **RX22** | 69.0 | 2462 | — | **77.0+** | **2747** | — |

**250 gr. Jacketed RN** — 3.300" OAL — BC: .291 SD: .313

| Powder | Sugg Starting Grains | Velocity fps | Pressure | Max Load Grains | Velocity fps | Pressure |
|---|---|---|---|---|---|---|
| IMR-4350 | 65.0 | 2450 | — | 72.0+ | 2762 | — |
| RX19 | 65.0 | 2297 | — | 72.0+ | 2591 | — |
| IMR-4831 | 66.0 | 2367 | — | 73.5+ | 2686 | — |
| XMR-3100 | 66.0 | 2267 | — | 72.0+ | 2509 | — |
| H-4831 | 69.0 | 2403 | — | 76.0+ | 2666 | — |
| IMR-7828 | 67.0 | 2225 | — | 74.0+ | 2523 | — |
| **RX22** | 68.0 | 2331 | — | **76.0+** | **2652** | — |

**Note:** Loads shown in shaded panels are maximum.
Loads shown in bold designate potentially most accurate load.
\+ Designates a compressed powder charge.

# 340 Weatherby Magnum

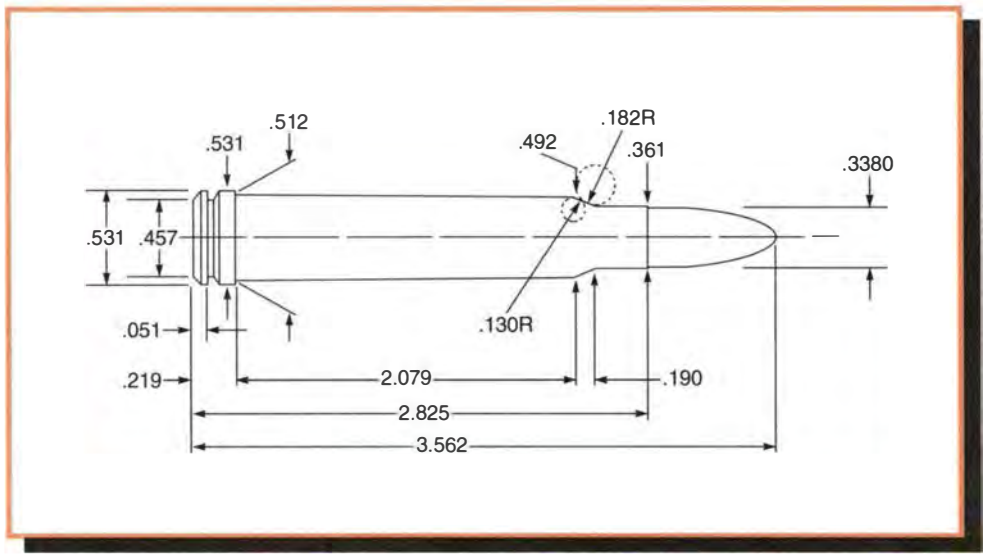


**Comments:**

This and the 338 Winchester were the only Magnum rifle chamberings available in the .338" diameter bore for many years. The 338 Winchester became quite popular while the Weatherby offering languished in proprietary status with a small, but loyal following. Only time will tell how the 340 fares against the new 338 Ultra Mag and its Weatherby stable mate, the 338-378. IMR-4350 and H-4831 often give best results. Weatherby recommends the exclusive use of Federal 215 primers. This data is intended for commercially produced and chambered rifles. It is not for use in custom guns that may lack the free bore found in standard Weatherby chambers.

**Test Components:**

Cases . . . . . .Federal
Trim-to Length . . . . . .2.815"
Primers . . . . . .Federal 215
Primer Size . . . . . .Large Rifle, Magnum
Lyman Shell Holder . . . . . .No. 13
Jacketed Bullets Used . . . . . .Speer SP #2405, 200 gr.
Hornady SP #3320, 225 gr.
Hornady RN #3330, 250 gr.

**200 gr. Jacketed SP** — 3.560" OAL — **BC:** .448 **SD:** .250

| Powder | Sugg Starting Grains | Velocity fps | Pressure | Max Load Grains | Velocity fps | Pressure |
|---|---|---|---|---|---|---|
| IMR-4350 | 76.0 | 2724 | — | 84.0 | 3144 | — |
| **RX19** | 81.0 | 2977 | — | **85.0** | **3112** | — |
| IMR-4831 | 79.0 | 2851 | — | 83.0 | 3025 | — |
| XMR-3100 | 84.0 | 2964 | — | 88.0 | 3094 | — |
| H-4831 | 81.0 | 2604 | — | 90.0+ | 3021 | — |
| RX22 | 85.0 | 3004 | — | 89.5 | 3164 | — |
| IMR-7828 | 86.0 | 3019 | — | 90.5 | 3147 | — |

**Test Specifications:**
**(Velocity Only)**

Firearm Used . . . . . .Weatherby Mk V
Barrel Length . . . . . .26"
Twist . . . . . .1-10"
Groove Dia. . . . . .338"

**225 gr. Jacketed SP** — 3.655" OAL — **BC:** .397 **SD:** .281

| Powder | Sugg Starting Grains | Velocity fps | Pressure | Max Load Grains | Velocity fps | Pressure |
|---|---|---|---|---|---|---|
| IMR-4350 | 72.0 | 2538 | — | 80.0 | 2923 | — |
| RX19 | 79.0 | 2894 | — | 83.0 | 3041 | — |
| IMR-4831 | 77.0 | 2773 | — | 80.5 | 2920 | — |
| XMR-3100 | 79.0 | 2795 | — | 83.0 | 2937 | — |
| H-4831 | 78.0 | 2512 | — | 87.0+ | 2915 | — |
| **RX22** | 83.0 | 2954 | — | **87.0+** | **3064** | — |
| IMR-7828 | 83.0 | 2939 | — | 87.0+ | 3035 | — |

**250 gr. Jacketed RN** — 3.655" OAL — **BC:** .291 **SD:** .313

| Powder | Sugg Starting Grains | Velocity fps | Pressure | Max Load Grains | Velocity fps | Pressure |
|---|---|---|---|---|---|---|
| IMR-4350 | 70.0 | 2418 | — | 77.0 | 2739 | — |
| RX19 | 76.0 | 2713 | — | 80.0 | 2841 | — |
| **IMR-4831** | 75.0 | 2548 | — | **79.0** | **2760** | — |
| XMR-3100 | 78.0 | 2635 | — | 82.0 | 2809 | — |
| H-4831 | 79.0 | 2652 | — | 83.0 | 2813 | — |
| RX22 | 80.0 | 2713 | — | 84.0 | 2876 | — |
| **IMR-7828** | 82.0 | 2791 | — | **86.0** | **2934** | — |

**Note:** Loads shown in shaded panels are maximum.
Loads shown in bold designate potentially most accurate load.
\+ Designates a compressed powder charge.

# 338 Remington Ultra Mag

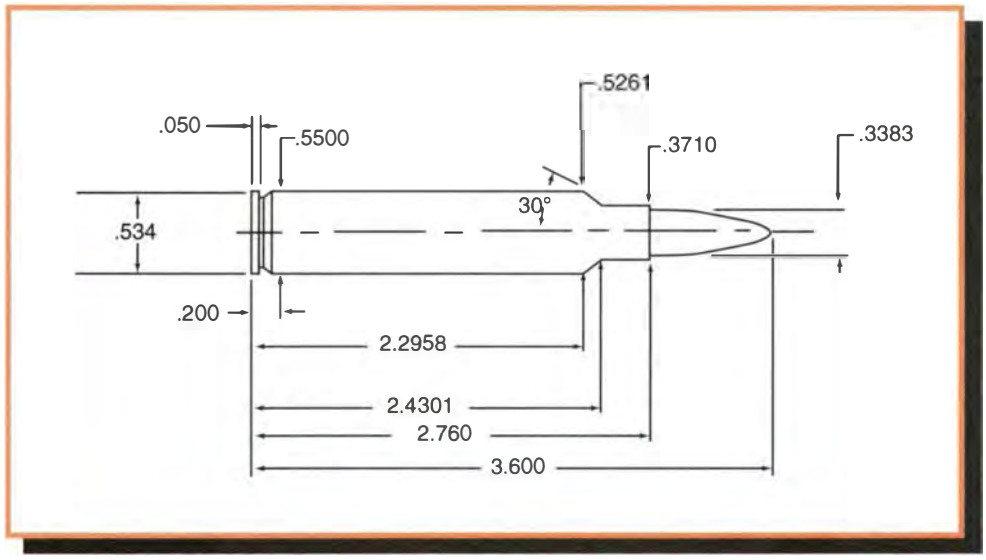


**Comments:**

Remington introduced the 338 member of the Ultra Mag family in 1999. This is Remington's first offering in the 338 caliber. The 338 RUM differs from the rest of its siblings by featuring a case body shortened by some .090". Barnes Bullets advises that data for their XLC coated bullets not be used for any uncoated bullets. Reloder 22 produced excellent results with a variety of different bullet weights.

**Test Components:**

Cases . . . . . .Remington
Trim-to Length . . . . . .2.750"
Primers . . . . . .Remington 9½ M
Primer Size . . . . . .Large Rifle, Magnum
Lyman Shell Holder . . . . . .No. 13
Jacketed Bullets Used . . .Barnes XLC #33854, 185 gr.
Combined Tech. Ballistic Silvertip #51200, 200 gr.
Barnes XBT #33883, 210 gr.
Barnes X #33885, 225 gr.
Combined Tech. Fail Safe #53230, 230 gr.
Swift A-Frame, 250 gr.
Swift A-Frame, 275 gr.

**Test Specifications:**
**(Velocity & Pressure)**

Firearm Used . . . . . .Universal Receiver
Barrel Length . . . . . .24"
Twist . . . . . .1-10"
Groove Dia. . . . . .338"

**185 gr. Jacketed XLC**
3.600" OAL
**BC:** .437
**SD:** .231

| Powder | Sugg Starting Grains | Velocity fps | Pressure P.S.I. | Max Load Grains | Velocity fps | Pressure P.S.I. |
|---|---|---|---|---|---|---|
| N160 | 90.0 | 3102 | 54,400 | 94.5 | 3277 | 63,600 |
| **IMR-4350** | 87.5 | 3012 | 48,900 | **92.0** | **3268** | **61,200** |
| RX19 | 91.5 | 3092 | 51,700 | 96.5 | 3318 | 63,500 |
| IMR-4831 | 90.0 | 3119 | 54,200 | 94.5 | 3305 | 63,600 |
| XMR-3100 | 94.5 | 3103 | 55,700 | 99.5+ | 3275 | 64,200 |
| H-4831 | 93.0 | 2998 | 51,700 | 98.0 | 3200 | 62,800 |
| WXR | 94.0 | 3116 | 54,300 | 99.0 | 3294 | 63,300 |
| N165 | 99.0 | 3196 | 56,200 | 104.0+ | 3360 | 64,500 |
| RX22 | 95.5 | 3137 | 54,100 | 100.7+ | 3332 | 63,800 |
| IMR-7828 | 95.0 | 3090 | 54,600 | 100.0+ | 3278 | 63,600 |

**200 gr. Jacketed Silvertip**
3.600" OAL
**BC:** .414
**SD:** .250

| Powder | Sugg Starting Grains | Velocity fps | Pressure P.S.I. | Max Load Grains | Velocity fps | Pressure P.S.I. |
|---|---|---|---|---|---|---|
| IMR-4350 | 85.5 | 2794 | 52,500 | 90.0 | 3202 | 64,300 |
| RX19 | 90.0 | 3015 | 50,800 | 94.5 | 3251 | 64,000 |
| IMR-4831 | 88.0 | 3039 | 53,100 | 93.0 | 3239 | 64,400 |
| XMR-3100 | 91.5 | 2984 | 53,200 | 96.5 | 3178 | 64,000 |
| H-4831 | 91.0 | 2940 | 51,800 | 96.0 | 3136 | 63,700 |
| WXR | 92.0 | 3010 | 51,300 | 97.0 | 3200 | 62,200 |
| N165 | 97.0 | 3026 | 51,200 | 102.0+ | 3210 | 61,400 |
| **RX22** | 93.0 | 3019 | 51,300 | **98.0+** | **3244** | **63,200** |
| IMR-7828 | 94.0 | 3062 | 56,000 | 99.0+ | 3216 | 64,000 |
| H1000 | 100.0 | 2999 | 53,500 | 105.0+ | 3174 | 62,600 |

**Note:** Loads shown in shaded panels are maximum.
Loads shown in bold designate potentially most accurate load.
\+ Designates a compressed powder charge.

# 338 Remington Ultra Mag

**210 gr. Barnes XBT**
3.575" OAL
**BC:** .471
**SD:** .263

| Powder | Sugg Starting Grains | Velocity fps | Pressure P.S.I. | Max Load Grains | Velocity fps | Pressure P.S.I. |
|---|---|---|---|---|---|---|
| IMR-4350 | 82.0 | 2867 | 54,600 | 86.5 | 3039 | 63,800 |
| RX19 | 87.0 | 2942 | 55,000 | 91.5 | 3114 | 64,500 |
| IMR-4831 | 85.5 | 2907 | 52,500 | 90.0 | 3084 | 64,100 |
| XMR-3100 | 88.0 | 2849 | 51,700 | 93.0 | 3047 | 62,900 |
| H-4831 | 90.0 | 2866 | 53,200 | 94.5 | 3036 | 64,100 |
| WXR | 86.5 | 2869 | 53,800 | 91.0 | 3016 | 61,000 |
| N165 | 88.5 | 2903 | 57,100 | 93.2 | 3035 | 63,700 |
| **RX22** | 90.0 | 2922 | 53,000 | **95.2** | **3121** | **63,200** |
| IMR-7828 | 90.0 | 2905 | 54,500 | 94.7 | 3064 | 63,300 |
| H1000 | 97.0 | 2881 | 52,800 | 102.0+ | 3049 | 62,200 |

**225 gr. Barnes X**
3.600" OAL
**BC:** .482
**SD:** .281

| Powder | Sugg Starting Grains | Velocity fps | Pressure P.S.I. | Max Load Grains | Velocity fps | Pressure P.S.I. |
|---|---|---|---|---|---|---|
| RX19 | 84.0 | 2831 | 57,500 | 88.7 | 2970 | 64,400 |
| IMR-4831 | 82.0 | 2856 | 61,100 | 86.0 | 2946 | 63,600 |
| XMR-3100 | 84.5 | 2737 | 53,900 | 89.0 | 2910 | 63,600 |
| H-4831 | 84.0 | 2775 | 60,200 | 88.5 | 2863 | 63,700 |
| WXR | 83.5 | 2843 | 60,200 | 88.0 | 2939 | 64,200 |
| N165 | 80.5 | 2699 | 55,900 | 85.0 | 2829 | 62,500 |
| **RX22** | 86.0 | 2852 | 56,600 | **91.0** | **2990** | **63,000** |
| IMR-7828 | 84.0 | 2749 | 54,600 | 88.5 | 2894 | 61,700 |
| H1000 | 92.0 | 2761 | 55,500 | 97.0+ | 2915 | 64,500 |
| RX25 | 86.5 | 2748 | 51,500 | 91.0 | 2938 | 61,100 |

**230 gr. Jacketed Fail-Safe**
3.600" OAL
**BC:** .436
**SD:** .288

| Powder | Sugg Starting Grains | Velocity fps | Pressure P.S.I. | Max Load Grains | Velocity fps | Pressure P.S.I. |
|---|---|---|---|---|---|---|
| IMR-4350 | 81.0 | 2699 | 51,400 | 85.7 | 2878 | 62,200 |
| RX19 | 86.0 | 2801 | 54,000 | 91.0 | 2982 | 64,200 |
| IMR-4831 | 84.0 | 2773 | 55,000 | 88.5 | 2921 | 63,700 |
| XMR-3100 | 87.0 | 2739 | 53,500 | 91.5 | 2912 | 63,300 |
| H-4831 | 87.0 | 2718 | 53,500 | 91.5 | 2876 | 62,900 |
| WXR | 86.0 | 2747 | 53,900 | 91.0 | 2899 | 63,100 |
| RX22 | 89.5 | 2780 | 53,100 | 94.2 | 2973 | 63,800 |
| **IMR-7828** | 88.5 | 2771 | 54,900 | **93.2** | **2936** | **64,200** |
| H1000 | 94.0 | 2796 | 56,200 | 99.0 | 2938 | 63,800 |
| RX25 | 91.0 | 2769 | 53,000 | 95.7 | 2952 | 63,200 |
| MagPro | 93.0 | 2869 | 53,600 | 98.0 | 3032 | 62,600 |
| Retumbo | 97.5 | 2807 | 48,100 | 103.0+ | 2969 | 57,300 |

**250 gr. Jacketed A-Frame**
3.520" OAL
**BC:** .427
**SD:** .313

| Powder | Sugg Starting Grains | Velocity fps | Pressure P.S.I. | Max Load Grains | Velocity fps | Pressure P.S.I. |
|---|---|---|---|---|---|---|
| RX19 | 83.0 | 2720 | 55,000 | 87.5 | 2869 | 64,200 |
| IMR-4831 | 81.0 | 2684 | 54,600 | 85.0 | 2837 | 63,900 |
| XMR-3100 | 83.0 | 2628 | 51,300 | 87.5 | 2809 | 63,600 |
| H-4831 | 84.0 | 2651 | 55,200 | 88.5 | 2796 | 64,200 |
| WXR | 82.5 | 2699 | 57,300 | 87.0 | 2797 | 61,100 |
| **RX22** | 86.0 | 2752 | 55,300 | **90.3+** | **2904** | **64,600** |
| IMR-7828 | 85.0 | 2703 | 55,500 | 89.5+ | 2844 | 64,000 |
| H-1000 | 90.0 | 2660 | 54,000 | 95.0+ | 2811 | 63,300 |
| RX25 | 87.0 | 2707 | 53,000 | 91.8+ | 2869 | 62,300 |
| MagPro | 89.0 | 2748 | 53,000 | 94.0 | 2873 | 59,000 |
| Retumbo | 96.0 | 2801 | 53,900 | 101.0+ | 2933 | 61,100 |

**275 gr. Jacketed A-Frame**
3.490" OAL
**BC:** .469
**SD:** .344

| Powder | Sugg Starting Grains | Velocity fps | Pressure P.S.I. | Max Load Grains | Velocity fps | Pressure P.S.I. |
|---|---|---|---|---|---|---|
| RX19 | 79.0 | 2566 | 56,000 | 83.5 | 2696 | 63,800 |
| XMR-3100 | 79.5 | 2449 | 50,400 | 83.7 | 2618 | 61,500 |
| H-4831 | 80.0 | 2540 | 60,100 | 84.5 | 2629 | 64,000 |
| RX22 | 81.0 | 2569 | 54,900 | 85.5 | 2718 | 64,400 |
| IMR-7828 | 79.0 | 2519 | 55,800 | 84.0 | 2646 | 63,200 |
| **H1000** | 85.5 | 2482 | 51,700 | **90.0** | **2654** | **63,800** |
| MagPro | 85.5 | 2603 | 54,700 | 90.0 | 2718 | 61,300 |
| Retumbo | 89.0 | 2637 | 54,600 | 94.0 | 2726 | 59,400 |
| AA-8700 | 96.0 | 2452 | 49,400 | 102.0+ | 2565 | 54,800 |

**Note:** Loads shown in shaded panels are maximum.
Loads shown in bold designate potentially most accurate load.
\+ Designates a compressed powder charge.

# 338-378 Weatherby Magnum

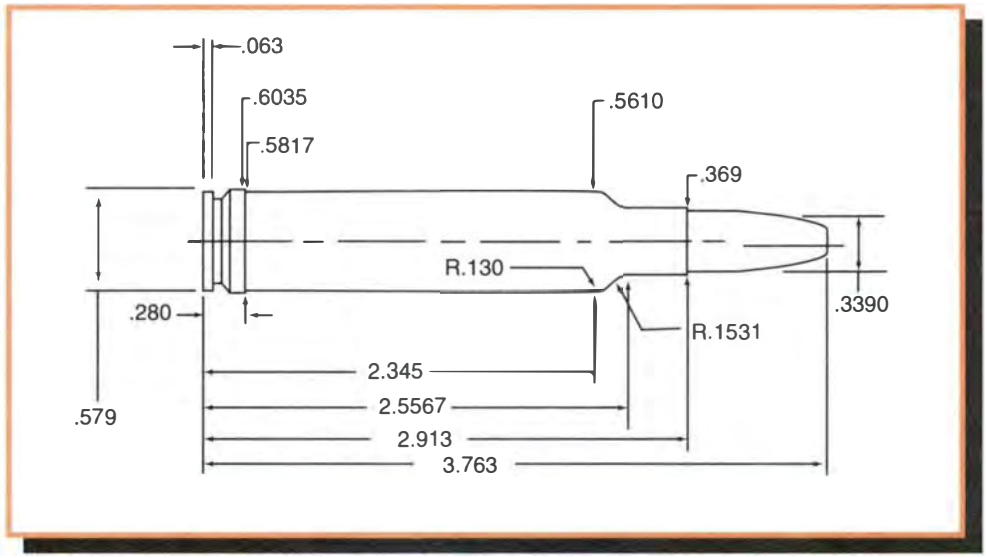


**Comments:**

This cartridge is similar to the old 338-378 Keith/Thompson wildcat, also based on the 378 Weatherby case. Powder capacity is approximately 15 percent more than the 338 Remington Ultra Mag and over 20 percent more than Weatherby's long time entry in the field, the 340 Weatherby Magnum. This cartridge can justifiably be called king of the factory 338s. Best performance requires large volumes of slow burning powder ignited by Federal 215 primers and premium bullets. IMR-7828 and H-1000 provided good ballistic uniformity with several different weight bullets. This number should amply handle anything in North America as well as much of Africa. This data is intended for commercially produced and chambered rifles. It is not intended for use in custom guns which may lack the free bore found in standard Weatherby chambers.

**Test Components:**

Cases . . . . . .Weatherby
Trim-to Length . . . . . .2.903"
Primers . . . . . .Federal 215
Primer Size . . . . . .Large Rifle, Magnum
Lyman Shell Holder . . . . . .No. 17
Jacketed Bullets Used . . .Barnes XLC #33854, 185 gr.
Comb. Tech. Bal. Silvertip #51200, 200 gr.
Barnes XBT #33883, 210 gr.
Barnes X #33885, 225 gr.
Swift A-Frame, 250 gr.
Swift A-Frame, 275 gr.

**Test Specifications: (Velocity Only)**

Firearm Used . . . . . .Weatherby Mk V
Barrel Length . . . . . .26"
Twist . . . . . .1-10"
Groove Dia. . . . . .338"

**185 gr. Barnes XLC** — 3.700" OAL — BC: .437 SD: .231

| Powder | Sugg Starting Grains | Velocity fps | Pressure | Max Load Grains | Velocity fps | Pressure |
|---|---|---|---|---|---|---|
| XMR-3100 | 103.5 | 3278 | — | 109.0 | 3537 | — |
| H-4831 SC | 104.0 | 3216 | — | 110.0 | 3421 | — |
| **RX22** | 105.5 | 3293 | — | **111.0** | **3513** | — |
| IMR-7828 | 104.5 | 3277 | — | 110.0 | 3548 | — |
| H1000 | 114.0 | 3366 | — | 120.0+ | 3556 | — |

**200 gr. Jacketed Ballistic Tip** — 3.740" OAL — BC: .414 SD: .250

| Powder | Sugg Starting Grains | Velocity fps | Pressure | Max Load Grains | Velocity fps | Pressure |
|---|---|---|---|---|---|---|
| XMR-3100 | 98.0 | 3052 | — | 103.5 | 3325 | — |
| H-4831SC | 99.0 | 3165 | — | 103.0 | 3288 | — |
| RX22 | 99.0 | 3125 | — | 104.5 | 3317 | — |
| **IMR-7828** | 99.0 | 3061 | — | **104.0** | **3323** | — |
| H1000 | 108.0 | 3129 | — | 113.5+ | 3355 | — |

**Note:** Loads shown in shaded panels are maximum.
Loads shown in bold designate potentially most accurate load.
\+ Designates a compressed powder charge.

# 338-378 Weatherby Magnum

**210 gr. Barnes XBT**
3.740" OAL
**BC:** .471
**SD:** .263

| Powder | Sugg Starting Grains | Velocity fps | Pressure | Max Load Grains | Velocity fps | Pressure |
|---|---|---|---|---|---|---|
| XMR-3100 | 99.0 | 3167 | — | 104.0 | 3377 | — |
| **H-4831SC** | 98.0 | 3119 | — | **103.0** | **3219** | — |
| RX22 | 100.0 | 3208 | — | 105.5 | 3394 | — |
| IMR-7828 | 101.0 | 3183 | — | 107.0 | 3445 | — |
| H1000 | 108.0 | 3110 | — | 113.0 | 3309 | — |

**225 gr. Barnes X**
3.720" OAL
**BC:** .482
**SD:** .281

| Powder | Sugg Starting Grains | Velocity fps | Pressure | Max Load Grains | Velocity fps | Pressure |
|---|---|---|---|---|---|---|
| XMR-3100 | 98.0 | 2871 | — | 103.0 | 3082 | — |
| H-4831SC | 99.0 | 2904 | — | 104.0 | 3045 | — |
| **IMR-7828** | 100.0 | 2895 | — | **105.0** | **3096** | — |
| H1000 | 105.5 | 2842 | — | 111.0 | 3026 | — |
| RX25 | 107.0 | 3006 | — | 113.0 | 3242 | — |
| H870 | 120.5 | 2992 | — | 127.0+ | 3116 | — |

**250 gr. A-Frame**
3.675" OAL
**BC:** .427
**SD:** .313

| Powder | Sugg Starting Grains | Velocity fps | Pressure | Max Load Grains | Velocity fps | Pressure |
|---|---|---|---|---|---|---|
| XMR-3100 | 96.0 | 2815 | — | 101.0 | 2988 | — |
| H-4831SC | 96.0 | 2832 | — | 101.0 | 2943 | — |
| **IMR-7828** | 97.0 | 2823 | — | **102.0** | **3003** | — |
| H1000 | 103.5 | 2778 | — | 109.0 | 2980 | — |
| RX25 | 102.0 | 2908 | — | 107.5 | 3105 | — |
| H870 | 116.0 | 2868 | — | 122.0+ | 3059 | — |

**275 gr. A-Frame**
3.640" OAL
**BC:** .469
**SD:** .344

| Powder | Sugg Starting Grains | Velocity fps | Pressure | Max Load Grains | Velocity fps | Pressure |
|---|---|---|---|---|---|---|
| **RX25** | **98.0** | **2778** | — | 103.0 | 2949 | — |
| H1000 | 100.0 | 2746 | — | 105.0 | 2879 | — |
| AA8700 | 110.0 | 2733 | — | 116.0+ | 2932 | — |
| H50BMG | 112.0 | 2789 | — | 117.0+ | 2894 | — |
| H870 | 112.0 | 2779 | — | 118.0+ | 2909 | — |

**Note:** Loads shown in shaded panels are maximum.
Loads shown in bold designate potentially most accurate load.
\+ Designates a compressed powder charge.

# 348 Winchester

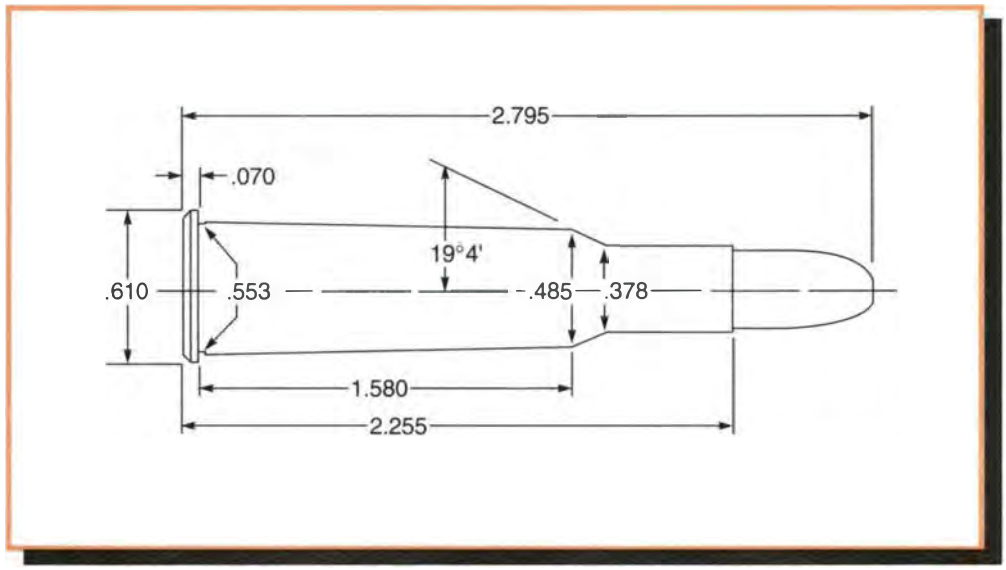


**Comments:**

The Model 71 Winchester is the only rifle made to ever chamber this cartridge. Conversely, this cartridge was offered in no other rifle but the Model 71. Winchester commenced Model 71 production in 1936 and discontinued it twenty years later. Browning resurrected the 348 when it ran a limited run of reproduction Model 71s during the 1980s. Factory ammunition included 150, 200 and 250-grain loadings at one time, however, Winchester currently lists only the 200-grain loading. The 348 is about the most firepower that has ever been packed into a lever-action rifle. The 348 retains a small but dedicated band of disciples, especially in the Alaskan bush. IMR-4895 is a good place to start for accuracy. Roll crimping is essential as on any tubular magazine.

**Test Components:**

Cases . . . . . .Winchester
Trim-to Length . . . . . .2.245"
Primers . . . . . .Winchester WLR
Primer Size . . . . . .Large Rifle
Lyman Shell Holder . . . . . .No. 18
Jacketed Bullets Used . . . .Hornady FN #3410, 200 gr

**Test Specifications:**
**(Velocity& Pressure)**

Firearm Used . . . . . .Universal Receiver
Barrel Length . . . . . .24"
Twist . . . . . .1-12"
Groove Dia. . . . . .348"

**200 gr. Jacketed FN**
2.830" OAL
**BC:** .246
**SD:** .236

| Powder | Sugg Starting Grains | Velocity fps | Pressure C.U.P. | Max Load Grains | Velocity fps | Pressure C.U.P. |
|---|---|---|---|---|---|---|
| **IMR-4895** | 49.0 | 2340 | 35,000 | **54.0** | **2546** | **39,400** |
| IMR-4064 | 48.0 | 2348 | 36,700 | 53.5 | 2523 | 39,700 |
| Varget | 50.0 | 2406 | 33,300 | 55.0 | 2557 | 39,400 |
| IMR-4320 | 44.0 | 2202 | 36,800 | 49.0 | 2415 | 39,700 |
| N140 | 43.0 | 2243 | 34,500 | 48.0 | 2432 | 39,200 |
| RX15 | 44.0 | 2286 | 35,200 | 49.0 | 2472 | 39,500 |
| N540 | 47.0 | 2310 | 34,700 | 52.0 | 2532 | 39,700 |
| N150 | 44.0 | 2279 | 34,500 | 49.0 | 2487 | 39,500 |
| N550 | 48.0 | 2197 | 34,900 | 53.0 | 2412 | 39,600 |
| AA2700 | 50.0 | 2193 | 34,700 | 56.0 | 2449 | 38,300 |
| IMR-4350 | 54.0 | 2194 | 34,600 | 60.0 | 2444 | 39,400 |
| XMR-4350 | 56.0 | 2148 | 33,600 | 62.0 | 2432 | 40,000 |
| H-4831 | 60.0 | 2166 | 33,100 | 67.0+ | 2519 | 39,100 |

**Note:** Loads shown in shaded panels are maximum.
Loads shown in bold designate potentially most accurate load.
\+ Designates a compressed powder charge.

# 9mm Luger (9mm Parabellum) (Rifle Data)

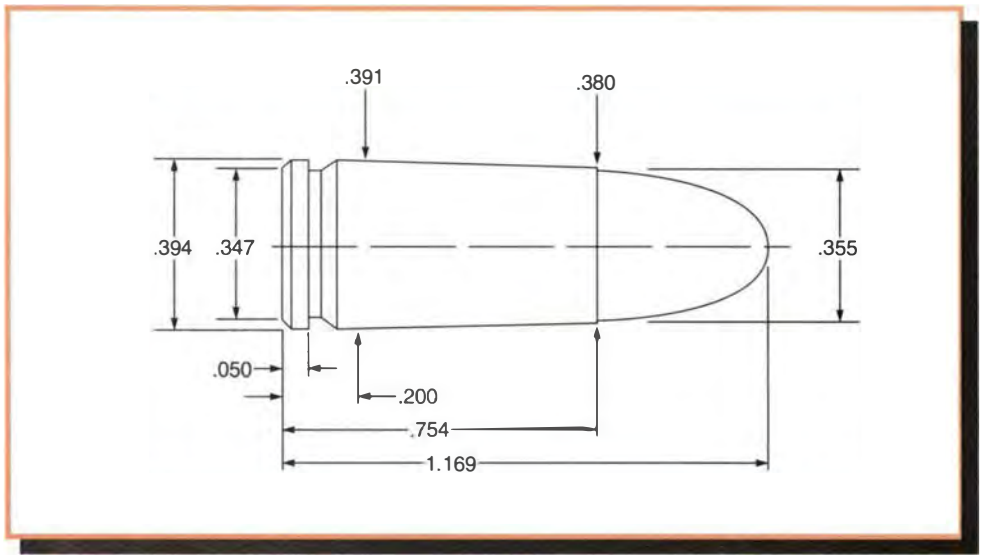


**Comments:**

The 9mm Luger has been one of the most popular pistol chamberings in the world. It has lost ground in recent years to the 40 Smith and Wesson. The data listed below was worked up in a pressure barrel and fired through a Ruger PC-9 Carbine. **Do not go below listed starting charges.** Doing so may cause a bullet to lodge in the rifle-length barrel. Firing a round with a bullet stuck in the barrel is extremely dangerous. Alliant's Power Pistol provided the best results in our testing.

**Test Components:**

Cases . . . . . .Federal
Trim-to Length . . . . . ..751"
Primers . . . . . .CCI 500
Primer Size . . . . . .Small Pistol
Lyman Shell Holder . . . . . .No. 12
Jacketed Bullets Used . .Hornady HP #35540, 115 gr.
Sierra HP #8125, 125 gr.
Sierra FMJ #8345, 130 gr.
Speer TMJ #4006, 147 gr.
Cast Bullets Used . . . . . .(sized to .355" dia)
#356242, 120 gr.
#356637, 147 gr.

**Test Specifications:**
**(Velocity Only)**

Firearm Used . . . . . .Ruger Carbine, PC9
Barrel Length . . . . . .16¼"
Twist . . . . . .1-10"
Groove Dia. . . . . .354"

**115 gr. Jacketed HP** — 1.090" OAL — **BC:** .129 **SD:** .130

| Powder | Sugg Starting Grains | Velocity fps | Pressure | Max Load Grains | Velocity fps | Pressure |
|---|---|---|---|---|---|---|
| 231 | 4.4 | 1117 | — | 4.9 | 1268 | — |
| N340 | 4.5 | 1047 | — | 5.0 | 1238 | — |
| **Power Pistol** | **5.9** | **1257** | — | 6.5 | 1409 | — |
| Blue Dot | 6.8 | 1207 | — | 7.6+ | 1375 | — |

**125 gr. Jacketed HP** — 1.075" OAL — **BC:** .137 **SD:** .142

| Powder | Sugg Starting Grains | Velocity fps | Pressure | Max Load Grains | Velocity fps | Pressure |
|---|---|---|---|---|---|---|
| 231 | 3.9 | 933 | — | 4.4 | 1106 | — |
| N340 | 4.0 | 901 | — | 4.6 | 1048 | — |
| **Power Pistol** | **5.1** | **1096** | — | 5.7 | 1246 | — |
| AA#5 | 5.4 | 1007 | — | 6.1 | 1188 | — |
| Blue Dot | 6.3 | 1001 | — | 7.1+ | 1270 | — |

**Note:** Loads shown in shaded panels are maximum.
Loads shown in bold designate potentially most accurate load.
\+ Designates a compressed powder charge.

# 9mm Luger (9mm Parabellum) (Rifle Data)

**130 gr. FMJ**
1.160" OAL
**BC:** .160
**SD:** .147

| Powder | Sugg Starting Grains | Velocity fps | Pressure | Max Load Grains | Velocity fps | Pressure |
|---|---|---|---|---|---|---|
| Titegroup | 3.8 | 1045 | — | 4.2 | 1109 | — |
| 231 | 3.9 | 1001 | — | 4.4 | 1107 | — |
| N340 | 4.1 | 1013 | — | 4.6 | 1127 | — |
| **Power Pistol** | **5.1** | **1130** | — | 5.7 | 1262 | — |
| AA#7 | 7.3 | 1126 | — | 8.2 | 1287 | — |

**147 gr. TMJ**
1.115" OAL
**BC:** .208
**SD:** .167

| Powder | Sugg Starting Grains | Velocity fps | Pressure | Max Load Grains | Velocity fps | Pressure |
|---|---|---|---|---|---|---|
| Titegroup | 3.2 | 919 | — | 3.6 | 1028 | — |
| Unique | 4.0 | 914 | — | 4.5 | 1050 | — |
| N340 | 3.9 | 947 | — | 4.4 | 1060 | — |
| **Power Pistol** | 4.5 | 1048 | — | **5.0** | **1121** | — |
| AA#7 | 6.4 | 1000 | — | 7.2 | 1119 | — |
| Blue Dot | 5.9 | 1071 | — | 6.6 | 1132 | — |

**#356242**
120 gr. (#2 Alloy) 1.065" OAL
**BC:** .154
**SD:** .136

| Powder | Sugg Starting Grains | Velocity fps | Pressure | Max Load Grains | Velocity fps | Pressure |
|---|---|---|---|---|---|---|
| Titegroup | 3.2 | 1105 | — | 3.8 | 1174 | — |
| N340 | 4.0 | 1116 | — | 4.5 | 1242 | — |
| AA#5 | 5.4 | 1143 | — | 6.0 | 1283 | — |
| **Power Pistol** | **5.0** | **1265** | — | 5.6 | 1369 | — |

**#356637**
147 gr. (#2 Alloy) 1.058" OAL
**BC:** .073
**SD:** .167

| Powder | Sugg Starting Grains | Velocity fps | Pressure | Max Load Grains | Velocity fps | Pressure |
|---|---|---|---|---|---|---|
| Titegroup | 2.5 | 863 | — | 2.8 | 927 | — |
| Universal | 3.0 | 885 | — | 3.4 | 989 | — |
| **N340** | 3.4 | 912 | — | **3.8** | **987** | — |
| Power Pistol | 4.1 | 997 | — | 4.6 | 1053 | — |
| AA#7 | 6.3 | 976 | — | 7.1 | 1120 | — |

**Note:** Loads shown in shaded panels are maximum.
Loads shown in bold designate potentially most accurate load.

# 357 Magnum (Rifle Data)

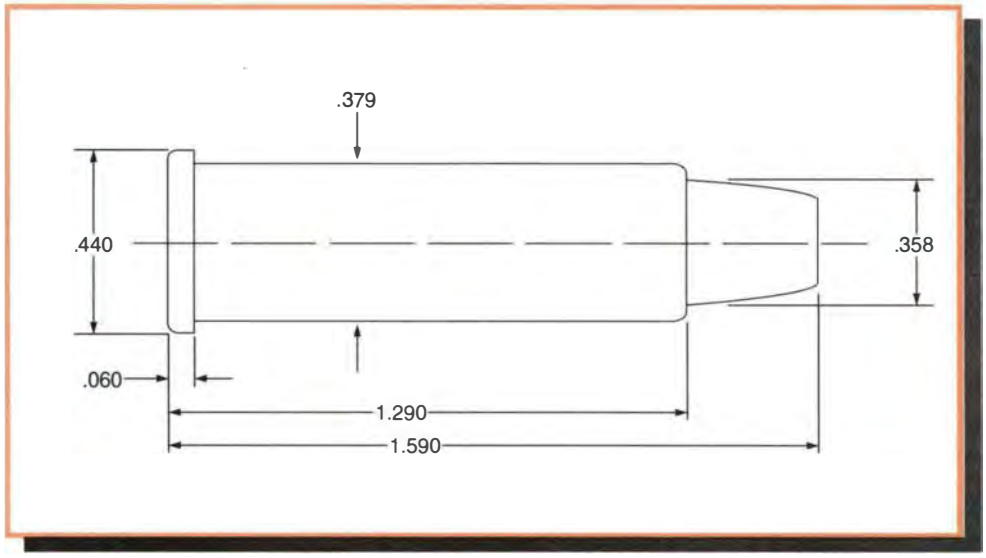


**Comments:**

Lever-action carbines chambered in revolver calibers have become quite popular recently. Part of this can be attributed to their lightweight and handling while the sport of Cowboy Action Shooting has also helped. All bullets used in rifles equipped with tubular magazines should be crimped in place. Powders that work well in 357 handgun loads, i.e. H110, 2400, N110, also worked well in the test rifle.

**Test Components:**

Cases . . . . . .Federal
Trim-to Length . . . . . .1.280"
Primers . . . . . .CCI 550
Primer Size . . . . . .Small Pistol, Magnum
Lyman Shell Holder . . . . . .No. 1
Jacketed Bullets Used . . . . .Speer JHP #4007, 110 gr.
Hornady JHP #35710, 125 gr.
Speer JHP #4203, 140 gr.
Hornady JHP #35750, 158 gr.
Sierra JHC #8365, 170 gr.
Cast Bullets Used . . . . . .(sized to .357" dia)
*gas check bullet *#358156, 155 gr.
#358429, 170 gr.

**Test Specifications:**
**(Velocity Only)**

Firearm Used . . . . . .Winchester Model 94AE
Barrel Length . . . . . .20"
Twist . . . . . .1-16"
Groove Dia. . . . . .356"

**110 gr. Jacketed HP**
1.590" OAL
**BC:** .122
**SD:** .123

| Powder | Sugg Starting Grains | Velocity fps | Pressure | Max Load Grains | Velocity fps | Pressure |
|---|---|---|---|---|---|---|
| Unique | 7.4 | 1489 | — | 10.0 | 1873 | — |
| Blue Dot | 11.0 | 1609 | — | 14.6 | 2178 | — |
| **2400** | 17.0 | 2005 | — | **20.3** | **2291** | — |
| N110 | 17.8 | 2069 | — | 19.8 | 2254 | — |
| IMR-4227 | 16.0 | 1606 | — | 19.5 | 1921 | — |

**125 gr. Jacketed HP**
1.590" OAL
**BC:** .151
**SD:** .140

| Powder | Sugg Starting Grains | Velocity fps | Pressure | Max Load Grains | Velocity fps | Pressure |
|---|---|---|---|---|---|---|
| Power Pistol | 9.1 | 1731 | — | 10.2 | 1862 | — |
| AA#5 | 10.6 | 1725 | — | 11.8 | 1858 | — |
| Blue Dot | 10.4 | 1534 | — | 13.3 | 2030 | — |
| 2400 | 15.0 | 1827 | — | 17.7 | 2048 | — |
| **H110** | **21.0** | **2207** | — | 22.0 | 2317 | — |
| IMR-4227 | 16.0 | 1582 | — | 19.5 | 1920 | — |

**Note:** Loads shown in shaded panels are maximum.
Loads shown in bold designate potentially most accurate load.

**140 gr. Jacketed HP**
1.590" OAL
**BC:** .152
**SD:** .157

| Powder | Sugg Starting Grains | Velocity fps | Pressure | Max Load Grains | Velocity fps | Pressure |
|---|---|---|---|---|---|---|
| AA#5 | 9.5 | 1513 | — | 10.6 | 1639 | — |
| Blue Dot | 9.2 | 1329 | — | 11.9 | 1780 | — |
| 2400 | 14.0 | 1631 | — | 16.5 | 1889 | — |
| **N110** | 15.3 | 1805 | — | **17.1** | **1955** | — |
| H110 | 17.3 | 1904 | — | 18.0 | 1931 | — |
| IMR-4227 | 15.0 | 1510 | — | 17.8 | 1749 | — |

**158 gr. Jacketed HP**
1.590" OAL
**BC:** .206
**SD:** .177

| Powder | Sugg Starting Grains | Velocity fps | Pressure | Max Load Grains | Velocity fps | Pressure |
|---|---|---|---|---|---|---|
| Blue Dot | 9.6 | 1442 | — | 10.7 | 1610 | — |
| **AA#9** | 13.4 | 1639 | — | **14.9** | **1774** | — |
| 2400 | 12.0 | 1472 | — | 14.9 | 1735 | — |
| N110 | 11.5 | 1327 | — | 14.0 | 1655 | — |
| H110 | 16.3 | 1785 | — | 17.0 | 1829 | — |
| IMR-4227 | 14.0 | 1391 | — | 16.1 | 1572 | — |

**170 gr. Jacketed HC**
1.590" OAL
**BC:** .176
**SD:** .191

| Powder | Sugg Starting Grains | Velocity fps | Pressure | Max Load Grains | Velocity fps | Pressure |
|---|---|---|---|---|---|---|
| AA#7 | 9.8 | 1347 | — | 11.0 | 1440 | — |
| AA#9 | 11.0 | 1347 | — | 12.6 | 1546 | — |
| 2400 | 10.5 | 1317 | — | 12.0 | 1436 | — |
| N110 | 11.0 | 1318 | — | 13.5 | 1587 | — |
| **H110** | 14.0 | 1549 | — | **15.5** | **1678** | — |
| IMR-4227 | 12.0 | 1202 | — | 13.7 | 1344 | — |

**#358156**
155 gr. (#2 Alloy) 1.590" OAL
**BC:** .213
**SD:** .174

| Powder | Sugg Starting Grains | Velocity fps | Pressure | Max Load Grains | Velocity fps | Pressure |
|---|---|---|---|---|---|---|
| HS-6 | 8.8 | 1370 | — | 9.7 | 1491 | — |
| AA#7 | 10.8 | 1493 | — | 12.0 | 1636 | — |
| AA#9 | 13.0 | 1628 | — | 14.5 | 1785 | — |
| 2400 | 10.6 | 1358 | — | 14.0 | 1688 | — |
| **N110** | 12.0 | 1488 | — | **15.0** | **1767** | — |
| IMR-4227 | 12.4 | 1257 | — | 15.2 | 1549 | — |

**#358429**
170 gr. (#2 Alloy) 1.553" OAL
**BC:** .286
**SD:** .191

| Powder | Sugg Starting Grains | Velocity fps | Pressure | Max Load Grains | Velocity fps | Pressure |
|---|---|---|---|---|---|---|
| Blue Dot | 8.3 | 1338 | — | 10.0 | 1592 | — |
| **AA#9** | 11.7 | 1514 | — | **13.0** | **1666** | — |
| 2400 | 11.5 | 1474 | — | 13.5 | 1677 | — |
| N110 | 12.3 | 1552 | — | 13.7 | 1684 | — |
| H110 | 14.4 | 1638 | — | 15.0 | 1704 | — |
| IMR-4227 | 12.0 | 1268 | — | 14.5 | 1509 | — |

**Note:** Loads shown in shaded panels are maximum.
Loads shown in bold designate potentially most accurate load.

# 35 Remington

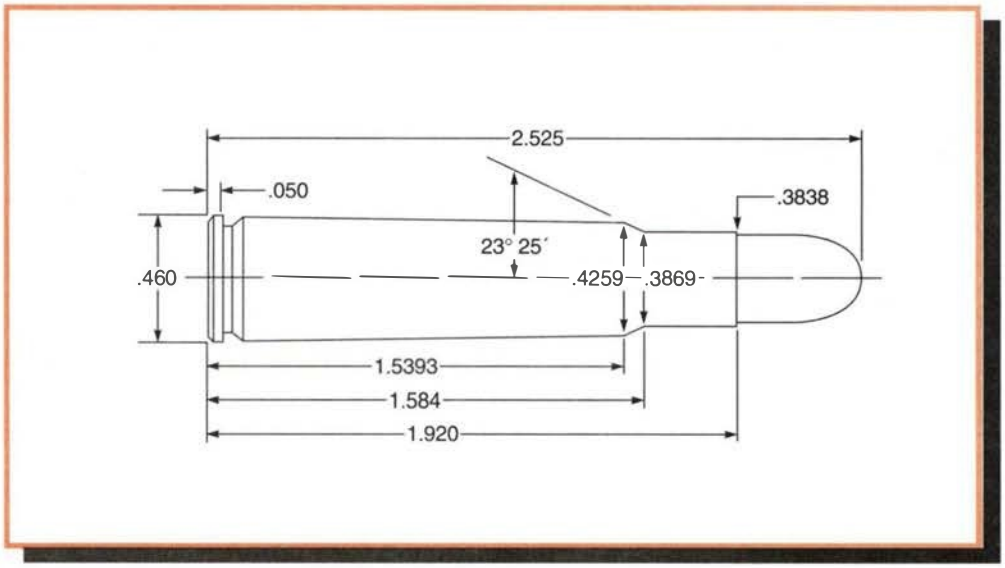


**Comments:**

The 35 Remington made its debut in 1906 as one of several chamberings (the others being the 25, 30, and 32 Remington) offered in Remington's new model 8 semiautomatic rifle. While the other calibers are long gone, the 35 Remington lives on today in the Marlin 336. Several different rifles have been produced in 35 Remington over the years. Rifles with tubular magazines are limited to flat or blunt nosed bullets. It's long been a popular brush cartridge out to 150 yards and is considered by many in the field to be superior to the 30-30.

The diminutive little Remington is the mildest of the 35 caliber rifle cartridges. Some current 358" diameter bullets feature heavy construction designed for the higher velocities of other cartridges. Such bullets may not perform at 35 Remington levels. The Lyman staff selected the bullets listed in our data section based on their suitability for the 35 Remington's ballistic levels. Cast bullet # 358315 was originally designed for the 35 Remington. Shooters reloading for Marlin rifles with Micro-Groove® rifling should keep velocities below 1,600 feet per second best accuracy.

**Test Components:**

Cases . . . . . .Remington
Trim-to Length . . . . . .1.910"
Primers . . . . . .Remington 9½
Primer Size . . . . . .Large Rifle
Lyman Shell Holder . . . . . .No. 2
Jacketed Bullets Used . . . . .Speer FSP #2435, 180 gr.
Sierra RN #2800, 200 gr.
Speer FSP #2439, 220 gr.
Cast Bullets Used . . . . . .(sized to .358" dia)
*gas check bullet #358430, 195 gr.
*#358315, 204 gr.

**Test Specifications:**
**(Velocity & Pressure)**

Firearm Used . . . . . .Universal Receiver
Barrel Length . . . . . .22"
Twist . . . . . .1-16"
Groove Dia. . . . . .357"

**180 gr. Jacketed FSP** — 2.470" OAL — **BC:** .245 **SD:** .201

| Powder | Sugg Starting Grains | Velocity fps | Pressure C.U.P. | Max Load Grains | Velocity fps | Pressure C.U.P. |
|---|---|---|---|---|---|---|
| N133 | 32.0 | 1941 | 28,300 | 35.5 | 2154 | 34,300 |
| **XMR-2015** | **32.0** | **1904** | **27,800** | 36.0 | 2135 | 34,900 |
| RX7 | 29.0 | 1930 | 28,700 | 32.5 | 2121 | 34,600 |
| IMR-3031 | 34.0 | 1829 | 28,700 | 38.5+ | 2158 | 35,000 |
| H-4895 | 35.0 | 1812 | 29,000 | 39.0+ | 2073 | 34,900 |
| 748 | 38.0 | 1954 | 30,700 | 42.0 | 2131 | 34,500 |
| IMR-4064 | 36.0 | 1838 | 29,500 | 40.5+ | 2101 | 34,800 |
| Varget | 37.0 | 1853 | 28,300 | 41.0+ | 2122 | 34,300 |

**200 gr. Jacketed RN** — 2.475" OAL — **BC:** .148 **SD:** .223

| Powder | Sugg Starting Grains | Velocity fps | Pressure C.U.P. | Max Load Grains | Velocity fps | Pressure C.U.P. |
|---|---|---|---|---|---|---|
| N133 | 31.0 | 1803 | 27,400 | 35.0 | 2060 | 34,600 |
| **XMR-2015** | 31.0 | 1780 | 28,500 | **35.0** | **2007** | **34,600** |
| RX7 | 28.0 | 1860 | 31,000 | 31.0 | 1990 | 34,800 |
| IMR-3031 | 33.0 | 1730 | 27,900 | 37.0 | 2029 | 35,000 |
| H-4895 | 34.0 | 1740 | 27,600 | 38.5 | 2035 | 34,500 |
| 748 | 37.0 | 1875 | 31,000 | 41.0 | 2041 | 34,600 |
| IMR-4064 | 34.0 | 1652 | 26,300 | 38.5 | 1947 | 34,700 |
| Varget | 36.0 | 1810 | 29,400 | 40.0 | 2031 | 34,700 |

**Note:** Loads shown in shaded panels are maximum.
Loads shown in bold designate potentially most accurate load.
+ Designates a compressed powder charge.

**220 gr. Jacketed FSP**
2.470" OAL
**BC:** .316
**SD:** .245

| Powder | Sugg Starting Grains | Velocity fps | Pressure C.U.P. | Max Load Grains | Velocity fps | Pressure C.U.P. |
|---|---|---|---|---|---|---|
| XMR-2015 | 30.0 | 1739 | 30,700 | 33.0 | 1884 | 34,700 |
| RX7 | 27.0 | 1763 | 32,300 | 30.3 | 1936 | 35,000 |
| IMR-3031 | 31.0 | 1641 | 28,900 | 35.0 | 1920 | 34,900 |
| **H-4895** | 33.0 | 1710 | 28,100 | **36.5+** | **1947** | **34,700** |
| IMR-4064 | 34.0 | 1706 | 30,600 | 38.0+ | 1926 | 34,900 |
| Varget | 33.0 | 1588 | 27,300 | 37.2 | 1838 | 34,500 |

**#358430**
195 gr. (#2 Alloy) 2.215" OAL
**BC:** .145
**SD:** .217

| Powder | Sugg Starting Grains | Velocity fps | Pressure C.U.P. | Max Load Grains | Velocity fps | Pressure C.U.P. |
|---|---|---|---|---|---|---|
| 2400 | 15.0 | 1343 | 16,500 | 19.5 | 1731 | 26,600 |
| SR-4759 | 16.0 | 1389 | 16,200 | 19.5 | 1745 | 26,400 |
| **IMR-4227** | **18.5** | **1394** | **15,800** | 22.5 | 1748 | 26,700 |
| XMP-5744 | 18.0 | 1389 | 16,100 | 24.5 | 1788 | 29,300 |
| IMR-4198 | 19.5 | 1365 | 15,500 | 25.5 | 1778 | 26,600 |
| RX7 | 20.5 | 1329 | 15,000 | 26.5 | 1758 | 24,700 |

**#358315**
204 gr. (#2 Alloy) 2.470" OAL
**BC:** .165
**SD:** .227

| Powder | Sugg Starting Grains | Velocity fps | Pressure C.U.P. | Max Load Grains | Velocity fps | Pressure C.U.P. |
|---|---|---|---|---|---|---|
| 2400 | 15.0 | 1353 | 18,500 | 20.0 | 1707 | 29,000 |
| **SR-4759** | 15.5 | 1337 | 17,700 | **21.0** | **1803** | **31,600** |
| IMR-4227 | 19.0 | 1375 | 17,000 | 24.2 | 1776 | 29,700 |
| XMP-5744 | 19.0 | 1387 | 16,500 | 25.0 | 1778 | 29,000 |
| **IMR-4198** | **20.0** | **1349** | **15,000** | 26.5 | 1760 | 25,900 |
| RX7 | 21.5 | 1364 | 14,900 | 27.7 | 1761 | 22,400 |
| N133 | 25.0 | 1349 | 14,600 | 29.5 | 1749 | 23,500 |

**Note:** Loads shown in shaded panels are maximum.
Loads shown in bold designate potentially most accurate load.
+ Designates a compressed powder charge.

# 358 Winchester (8.8 x 51mm)

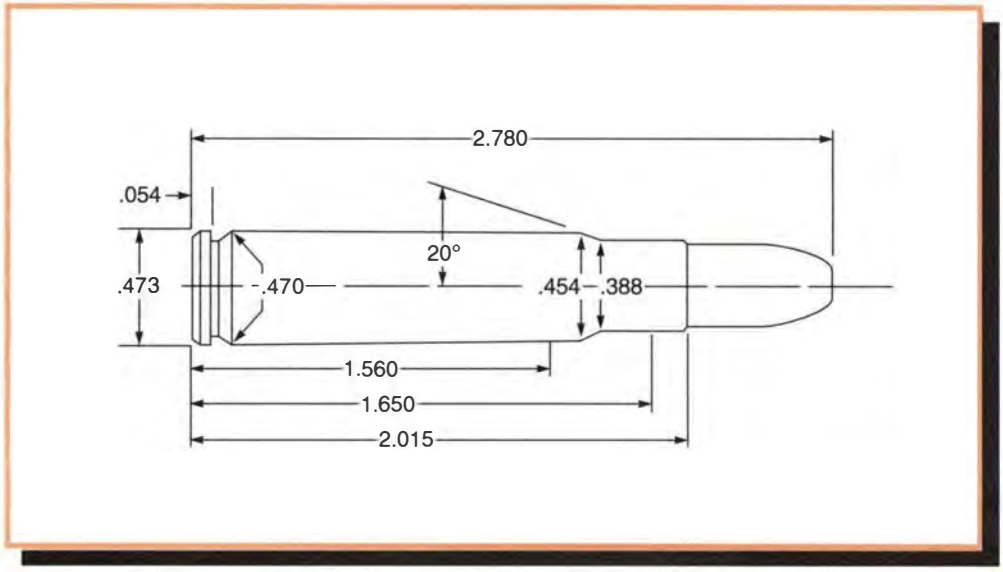


**Comments:**

The 358 Winchester is another promising cartridge that never achieved great commercial success. Winchester brought out this necked up 308 in 1955. It gained a reputation as a handy brush cartridge with a bit extra range to spare for open areas. 225 or 250-grain bullets and IMR-4064 usually give good results in the 358. Shooters loading ammunition from necked up GI brass should approach maximum loads cautiously due to the smaller capacity of military cases.

**Test Components:**

Cases . . . . . .Winchester
Trim-to Length . . . . . .2.005"
Primers . . . . . .Remington 9½ and Winchester WLR
Primer Size . . . . . .Large Rifle
Lyman Shell Holder . . . . . .No. 2
Jacketed Bullets Used . . . . .Speer FSP #2435, 180 gr.
Sierra RN #2800, 200 gr.
Speer FSP #2439, 220 gr.
Hornady SP #3520, 250 gr.
Cast Bullets Used . . . . . .(sized to .359" dia)
*gas check bullet #358430, 195 gr.
*#358315, 204 gr.

**Test Specifications: (Velocity & Pressure)**

Firearm Used . . . . . .Universal Receiver
Barrel Length . . . . . .24"
Twist . . . . . .1-12"
Groove Dia. . . . . .359"

**180 gr. Jacketed FSP** — 2.680" OAL — **BC:** .245 **SD:** .201

| Powder | Sugg Starting Grains | Velocity fps | Pressure C.U.P. | Max Load Grains | Velocity fps | Pressure C.U.P. |
|---|---|---|---|---|---|---|
| IMR-4198 | 37.0 | 2378 | 34,300 | 41.5 | 2667 | 49,300 |
| RX7 | 40.0 | 2511 | 36,500 | 44.8 | 2752 | 49,400 |
| **N130** | 41.0 | 2501 | 35,200 | **46.0** | **2788** | **49,800** |
| XMR-2015 | 44.0 | 2519 | 39,800 | 48.8+ | 2728 | 48,800 |
| IMR-3031 | 46.0 | 2469 | 40,700 | 51.0 | 2728 | 49,100 |
| H-335 | 48.0 | 2508 | 38,300 | 53.0+ | 2770 | 49,700 |
| 748 | 48.0 | 2340 | 30,800 | 53.0+ | 2521 | 36,900 |

**200 gr. Jacketed RN** — 2.550" OAL — **BC:** .148 **SD:** .223

| Powder | Sugg Starting Grains | Velocity fps | Pressure C.U.P. | Max Load Grains | Velocity fps | Pressure C.U.P. |
|---|---|---|---|---|---|---|
| RX7 | 34.0 | 2071 | 28,500 | 38.0 | 2309 | 44,500 |
| IMR-4895 | 44.0 | 2220 | 35,900 | 49.0 | 2458 | 41,800 |
| 748 | 48.5 | 2227 | 36,700 | 53.5+ | 2507 | 47,900 |
| **N135** | **46.0** | **2401** | **35,100** | 51.5 | 2659 | 49,000 |
| IMR-4064 | 46.0 | 2268 | 36,000 | 51.0+ | 2491 | 44,300 |
| Varget | 49.0 | 2340 | 34,800 | 54.0+ | 2612 | 45,500 |

**Note:** Loads shown in shaded panels are maximum.
Loads shown in bold designate potentially most accurate load.
+ Designates a compressed powder charge.

# 358 Winchester (8.8 x 51mm)

**220 gr. Jacketed FSP**
2.680" OAL
**BC:** .316
**SD:** .245

| Powder | Sugg Starting Grains | Velocity fps | Pressure C.U.P. | Max Load Grains | Velocity fps | Pressure C.U.P. |
|---|---|---|---|---|---|---|
| IMR-3031 | 41.0 | 2199 | 39,600 | 46.0 | 2421 | 49,600 |
| H-335 | 42.0 | 2184 | 35,500 | 47.0 | 2419 | 49,400 |
| IMR-4895 | 44.0 | 2179 | 38,700 | 49.0 | 2438 | 49,600 |
| 748 | 47.5 | 2289 | 37,200 | 53.0 | 2499 | 49,100 |
| N135 | 43.0 | 2274 | 36,400 | 47.5+ | 2483 | 48,800 |
| **IMR-4064** | 44.0 | 2174 | 37,700 | **49.0+** | **2410** | **48,900** |
| Varget | 47.0 | 2278 | 36,200 | 52.0 | 2514 | 48,700 |

**250 gr. Jacketed SP**
2.810" OAL
**BC:** .375
**SD:** .279

| Powder | Sugg Starting Grains | Velocity fps | Pressure C.U.P. | Max Load Grains | Velocity fps | Pressure C.U.P. |
|---|---|---|---|---|---|---|
| IMR-3031 | 36.0 | 1909 | 33,600 | 40.5 | 2198 | 49,400 |
| H-335 | 38.0 | 1978 | 34,500 | 42.5 | 2182 | 49,600 |
| IMR-4895 | 39.0 | 1979 | 40,200 | 43.0 | 2182 | 49,300 |
| 748 | 41.0 | 2003 | 33,600 | 46.0 | 2257 | 49,100 |
| N135 | 39.0 | 2094 | 36,900 | 43.0 | 2283 | 49,200 |
| Varget | 41.0 | 2047 | 36,100 | 46.0 | 2284 | 49,300 |
| **RX15** | 39.0 | 1978 | 37,500 | **43.3** | **2189** | **49,500** |

***#358430**
195 gr. (#2 Alloy) 2.400" OAL
**BC:** .145
**SD:** .216

| Powder | Sugg Starting Grains | Velocity fps | Pressure C.U.P. | Max Load Grains | Velocity fps | Pressure C.U.P. |
|---|---|---|---|---|---|---|
| SR-4759 | 17.5 | 1536 | 22,000 | 23.5 | 1965 | 31,300 |
| **IMR-4227** | **20.0** | **1549** | **19,800** | 27.0 | 1953 | 29,900 |
| XMP-5744 | 21.0 | 1540 | 22,600 | 28.0 | 1912 | 30,000 |

***#358315**
204 gr. (#2 Alloy) 2.560" OAL
**BC:** .165
**SD:** .226

| Powder | Sugg Starting Grains | Velocity fps | Pressure C.U.P. | Max Load Grains | Velocity fps | Pressure C.U.P. |
|---|---|---|---|---|---|---|
| 2400 | 18.5 | 1628 | 22,000 | 25.0 | 1979 | 34,000 |
| SR-4759 | 19.0 | 1601 | 21,700 | 24.5 | 1964 | 33,400 |
| IMR-4227 | 22.5 | 1615 | 21,500 | 28.0 | 1967 | 29,600 |
| **XMP-5744** | 23.0 | 1627 | 23,200 | **29.0** | **1975** | **33,400** |
| IMR-4198 | 25.0 | 1643 | 16,500 | 30.5 | 1981 | 27,600 |
| N130 | 27.0 | 1627 | 17,900 | 32.5 | 1940 | 24,100 |
| RX7 | 27.0 | 1618 | 16,500 | 32.0 | 2018 | 27,300 |

**Note:** Loads shown in shaded panels are maximum.
Loads shown in bold designate potentially most accurate load.
\+ Designates a compressed powder charge.
* Designates the use of Win. WLR primers.

# 35 Whelen

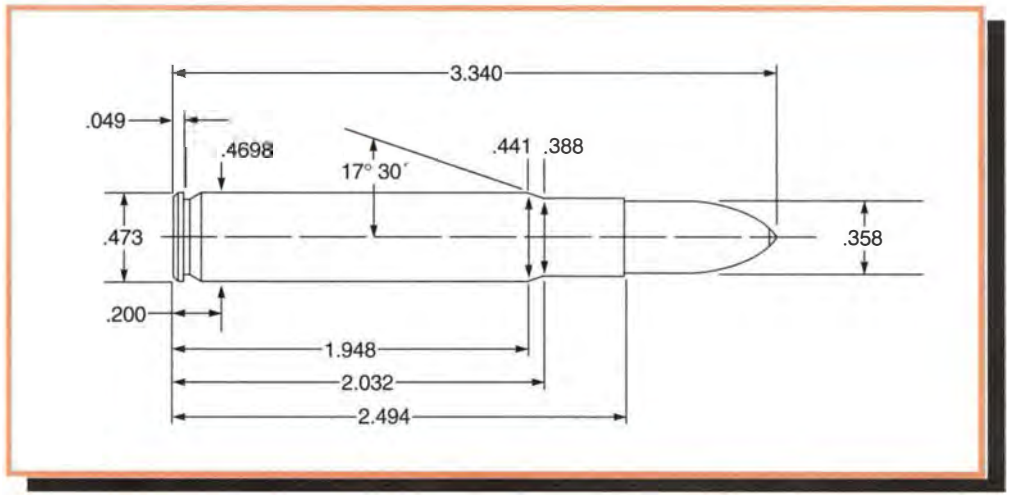


**Comments:**

This is yet another popular wildcat legitimized by Remington. The 35 Whelen is essentially a 30-06 necked up to accept .358" diameter bullets. The cartridge had been around since the early 1920s before it became factory sanctioned in 1988. The Whelen ably fills a niche between the 30-06 and 416 Rigby for those shooters with an aversion to belted magnums. Its ability to be chambered in standard length actions and ready source of parent cases made it an economical alternative to the 375 H&H for many shooters. Credit for its creation has been the subject of some debate. Although the namesake of Colonel Townsend Whelen, the first rifles originated from the firm of Griffin and Howe. Factory ammunition and bulk cases are available from Remington but many shooters still choose to neck up 30-06 cases. Shooters reloading GI cases should approach maximum loads with caution due to the smaller capacity of military cases. IMR-4064 has long been a favorite for loading the Whelen. This data is intended for standard Remington chambers. Older, custom rifles may have minor dimensional variations in the chamber.

**Test Components:**

Cases . . . . . .Remington
Trim-to Length . . . . . .2.484"
Primers . . . . . .Remington 9½
Primer Size . . . . . .Large Rifle
Lyman Shell Holder . . . . . .No. 2
Jacketed Bullets Used . . . . .Speer FSP #2435, 180 gr.
Sierra RN #2800, 200 gr.
Barnes X #35825, 225 gr.
Hornady SP #3520, 250 gr.
Hornady HP (Pistol) #35750, 158 gr.
Cast Bullets Used . . . . . .(sized to .358" dia)
*gas check bullet #358430, 195 gr.
*#358315, 204 gr.

**Test Specifications:**
**(Velocity & Pressure)**

Firearm Used . . . . . .Universal Receiver
Barrel Length . . . . . .24"
Twist . . . . . .1-16"
Groove Dia. . . . . .3575"

**180 gr. Jacketed FSP** — 3.045" OAL — **BC:** .245 **SD:** .201

| Powder | Sugg Starting Grains | Velocity fps | Pressure C.U.P. | Max Load Grains | Velocity fps | Pressure C.U.P. |
|---|---|---|---|---|---|---|
| IMR-3031 | 52.0 | 2438 | 39,100 | 57.5+ | 2740 | 49,900 |
| AA2230 | 50.0 | 2345 | 34,900 | 55.7 | 2772 | 50,300 |
| H-335 | 53.0 | 2301 | 32,700 | 59.0 | 2750 | 49,200 |
| H-4895 | 54.0 | 2508 | 38,900 | 60.0+ | 2763 | 47,900 |
| N135 | 54.0 | 2550 | 41,500 | 60.0+ | 2778 | 47,900 |
| IMR-4064 | 55.5 | 2465 | 41,200 | 61.7+ | 2714 | 48,500 |
| Varget | 55.5 | 2577 | 41,700 | 61.7+ | 2814 | 48,500 |
| AA2520 | 55.5 | 2628 | 41,800 | 61.5 | 2859 | 48,800 |
| **IMR-4320** | 53.0 | 2405 | 41,800 | **58.8** | **2680** | **49,200** |
| RX15 | 57.0 | 2567 | 43,400 | 63.0+ | 2789 | 49,500 |

**200 gr. Jacketed RN** — 3.045" OAL — **BC:** .148 **SD:** .223

| Powder | Sugg Starting Grains | Velocity fps | Pressure C.U.P. | Max Load Grains | Velocity fps | Pressure C.U.P. |
|---|---|---|---|---|---|---|
| IMR-3031 | 51.0 | 2356 | 39,600 | 56.8+ | 2630 | 49,900 |
| AA2230 | 49.5 | 2268 | 35,200 | 55.0 | 2641 | 48,400 |
| H-335 | 53.0 | 2355 | 40,900 | 58.6 | 2657 | 49,700 |
| H-4895 | 53.0 | 2411 | 37,500 | 59.0 | 2675 | 49,600 |
| 748 | 56.5 | 2461 | 35,600 | 63.0+ | 2540 | 47,200 |
| **N135** | 53.0 | 2492 | 42,400 | **59.0+** | **2676** | **48,100** |
| IMR-4064 | 53.0 | 2313 | 38,900 | 59.0+ | 2594 | 49,300 |
| Varget | 55.0 | 2502 | 41,800 | 61.0+ | 2715 | 50,100 |
| AA2520 | 52.0 | 2287 | 32,000 | 57.4 | 2659 | 47,700 |
| IMR-4320 | 52.0 | 2257 | 37,800 | 58.0 | 2536 | 49,900 |
| RX15 | 54.0 | 2428 | 41,700 | 60.0 | 2635 | 49,000 |

**Note:** Loads shown in shaded panels are maximum.
Loads shown in bold designate potentially most accurate load.
+ Designates a compressed powder charge.

# 35 Whelen

**225 gr. Barnes X**
3.340" OAL
**BC:** .405
**SD:** .250

| Powder | Sugg Starting Grains | Velocity fps | Pressure C.U.P. | Max Load Grains | Velocity fps | Pressure C.U.P. |
|---|---|---|---|---|---|---|
| IMR-3031 | 49.0 | 2354 | 37,500 | 54.4+ | 2617 | 48,400 |
| H-335 | 50.0 | 2099 | 36,600 | 55.3 | 2419 | 49,500 |
| H-4895 | 49.5 | 2218 | 38,300 | 55.0 | 2467 | 49,900 |
| 748 | 56.0 | 2356 | 37,200 | 62.0+ | 2456 | 43,800 |
| IMR-4064 | 50.5 | 2145 | 39,900 | 56.0 | 2395 | 49,600 |
| Varget | 50.5 | 2204 | 40,000 | 56.0 | 2475 | 49,800 |
| AA2520 | 50.0 | 2158 | 35,200 | 55.3 | 2506 | 50,100 |
| IMR-4320 | 49.0 | 2077 | 40,600 | 54.0 | 2344 | 50,400 |
| **N140** | 52.0 | 2260 | 41,500 | **58.0** | **2484** | **50,400** |
| RX15 | 50.5 | 2219 | 42,200 | 56.2 | 2424 | 48,400 |

**250 gr. Jacketed SP**
3.255" OAL
**BC:** .375
**SD:** .279

| Powder | Sugg Starting Grains | Velocity fps | Pressure C.U.P. | Max Load Grains | Velocity fps | Pressure C.U.P. |
|---|---|---|---|---|---|---|
| IMR-3031 | 46.0 | 2237 | 35,400 | 51.3+ | 2485 | 48,200 |
| **H-4895** | 48.0 | 2104 | 34,300 | **53.0** | **2377** | **50,300** |
| 748 | 53.0 | 2252 | 40,200 | 59.0+ | 2382 | 45,200 |
| IMR-4064 | 48.5 | 2088 | 38,000 | 54.0 | 2344 | 50,700 |
| Varget | 49.5 | 2178 | 40,300 | 55.0 | 2413 | 50,400 |
| AA2520 | 48.0 | 2149 | 37,300 | 53.0 | 2410 | 49,300 |
| IMR-4320 | 47.0 | 2024 | 38,900 | 52.5 | 2291 | 49,400 |
| N140 | 51.0 | 2213 | 40,400 | 56.5+ | 2426 | 51,000 |
| RX15 | 49.0 | 2095 | 37,400 | 54.0 | 2364 | 50,200 |

**158 gr. Jacketed HP (Pistol Bullet)** 2.787" OAL
**BC:** .206
**SD:** .177

| Powder | Sugg Starting Grains | Velocity fps | Pressure C.U.P. | Max Load Grains | Velocity fps | Pressure C.U.P. |
|---|---|---|---|---|---|---|
| 2400 | 26.7 | 1405 | 23,300 | 31.0 | 1546 | 40,800 |
| SR-4759 | 22.0 | 1435 | 23,000 | 23.6 | 1564 | 39,000 |
| **XMP-5744** | 22.5 | 1411 | 22,000 | **25.5** | **1570** | **38,500** |

**#358430**
195 gr. (#2 Alloy) 2.805" OAL
**BC:** .145
**SD:** .217

| Powder | Sugg Starting Grains | Velocity fps | Pressure C.U.P. | Max Load Grains | Velocity fps | Pressure C.U.P. |
|---|---|---|---|---|---|---|
| Unique | 13.0 | 1546 | 20,600 | 19.2 | 1894 | 38,100 |
| 2400 | 22.5 | 1815 | 17,800 | 29.0 | 2255 | 43,600 |
| **SR-4759** | **27.0** | **1935** | **20,200** | 34.7 | 2337 | 42,400 |
| IMR-4198 | 33.0 | 2060 | 21,800 | 44.0 | 2553 | 40,200 |
| IMR-3031 | 39.0 | 2094 | 20,500 | 50.0+ | 2594 | 36,300 |

**#358315**
204 gr. (#2 Alloy) 3.045" OAL
**BC:** .165
**SD:** .227

| Powder | Sugg Starting Grains | Velocity fps | Pressure C.U.P. | Max Load Grains | Velocity fps | Pressure C.U.P. |
|---|---|---|---|---|---|---|
| SR-4759 | 24.0 | 1707 | 28,800 | 31.0 | 2092 | 38,800 |
| IMR-4227 | 30.0 | 1615 | 24,700 | 36.0 | 2096 | 31,900 |
| **XMP-5744** | **28.0** | **1704** | **27,600** | 37.0 | 2124 | 38,400 |
| IMR-4198 | 30.0 | 1666 | 22,400 | 37.5 | 2097 | 31,200 |
| RX7 | 36.0 | 1767 | 22,000 | 40.5 | 2131 | 30,000 |
| IMR-3031 | 50.0 | 2558 | 34,600 | 58.5 | 2860 | 49,000 |

**Note:** Loads shown in shaded panels are maximum.
Loads shown in bold designate potentially most accurate load.
\+ Designates a compressed powder charge.

# 38-55 Winchester (38-55 Ballard)

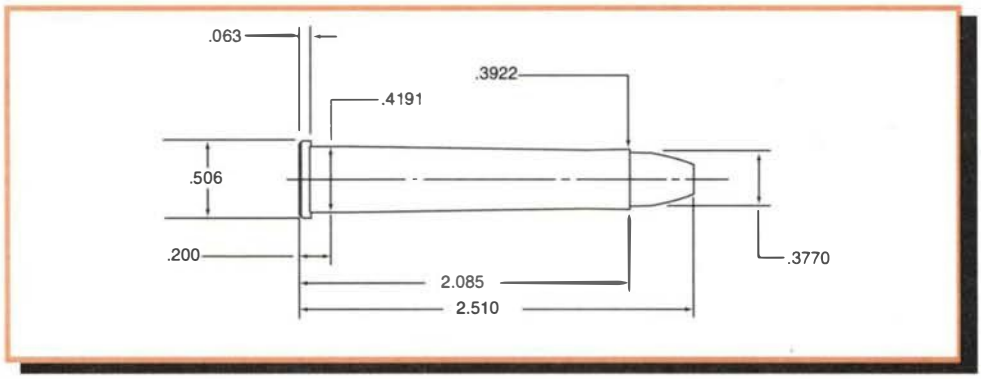


**Comments:**

Marlin first introduced the 38-55 in 1884 as a black powder cartridge for Ballard target rifles. Winchester produced rifles chambered in 38-55 shortly thereafter. This caliber survived into the smokeless era in t e Model 94 along with several other makes and models before being finally discontinued in 1940. The cartridge developed a reputation for accuracy and effectiveness in the field that still serves it well today. The 38-55 has experienced a revival of late among the Black Powder Cartridge Silhouette and Cowboy Action Shooting establishments. U.S. Repeating Arms, Marlin, and several smaller custom manufacturers currently offer 38-55 chambered rifles. The 38-55 also served as the basis of several other cartridges brought out by Winchester over the years including the 30-30.

The 38-55 responds well to handloading, especially with t e use of cast bullets. Many 38-55 caliber rifles show wide variations in groove diameters. Some older rifles measure as large as .382" Shooters should slug their bore and size bullets accordingly. Cast bullet #375248 was first introduced around 1905 and has been a favorite for the 38-55 ever since. It is also compatible for lever action rifles. Bullet #375674 exceeds the maximum overall length when seated and is for single shot rifles only. Shooters may occasionally encounter older brass that exceeds 2.085" in length. Maximum cartridge case length was originally 2.129" but has been established at 2.085" by SAAMI. All listed data has been worked up with the newer, shorter cases. SAAMI has also established a Maximum Average Pressure (MAP) of 30,000 CUP for the 38-55. Shooters should exercise caution if loading for older guns as many have developed excessive headspace. The following data is intended for use in modern firearms such as the Winchester 94. Shooters should never attempt to fire any 375 Winchester ammunition in any rifle chambered for the 38-55.

**The 375 Winchester is dimensionally similar but loaded to substantially higher pressure. If in doubt, all older rifles should be examined by a qualified gunsmith before shooting.**

**Test Components:**

Cases . . . . . .Winchester
Trim-to Length . . . . . .2.075"
Primers . . . . . .Remington 9½
Primer Size . . . . . .Large Rifle
Lyman Shell Holder . . . . . .No. 6
Jacketed Bullets Used . . .Barnes FNSP #5510, 255 gr.
Cast Bullets Used . . . . . .(sized to .379" dia)
#375248, 249 gr.
#378674, 335 gr.

**255 gr. Jacketed FNSP** — 2.480" OAL — BC: .290 SD: .259

| Powder | Sugg Starting Grains | Velocity fps | Pressure C.U.P. | Max Load Grains | Velocity fps | Pressure C.U.P. |
|---|---|---|---|---|---|---|
| **XMP-5744** | **20.5** | **1229** | **14,700** | 23.0 | 1487 | 24,600 |
| IMR-4198 | 24.0 | 1379 | 16,200 | 27.0 | 1616 | 23,400 |
| IMR-3031 | 31.5 | 1475 | 17,800 | 35.0+ | 1762 | 26,800 |
| IMR-4895 | 31.5 | 1382 | 16,400 | 35.0+ | 1576 | 20,000 |

**Note:** Loads shown in shaded panels are maximum. Loads shown in bold designate potentially most accurate load.
+ Designates a compressed powder charge.
* Exceeds SAAMI Maximum length. For use in single shot rifles only.

**Test Specifications:**
**(Velocity & Pressure)**

Firearm Used . . . . . .Universal Receiver
Barrel Length . . . . . .30"
Twist . . . . . .1-20"
Groove Dia. . . . . .379"

**#375248** — 249 gr. (#2 Alloy) 2.550" OAL — BC: .290 SD: .248

| Powder | Sugg Starting Grains | Velocity fps | Pressure C.U.P. | Max Load Grains | Velocity fps | Pressure C.U.P. |
|---|---|---|---|---|---|---|
| **XMP-5744** | **23.0** | **1490** | **17,400** | 25.5 | 1679 | 24,400 |
| IMR-4198 | 25.0 | 1590 | 21,200 | 28.0 | 1755 | 23,000 |
| RX7 | 24.0 | 1661 | 22,400 | 27.5 | 1788 | 25,400 |
| IMR-3031 | 31.0 | 1506 | 17,000 | 35.0+ | 1812 | 25,600 |
| IMR-4895 | 32.5 | 1574 | 18,400 | 36.0+ | 1729 | 23,200 |

**#378674** — 335 gr. (#2 Alloy) *2.900" OAL — BC: .360 SD: .333

| Powder | Sugg Starting Grains | Velocity fps | Pressure C.U.P. | Max Load Grains | Velocity fps | Pressure C.U.P. |
|---|---|---|---|---|---|---|
| **XMP-5744** | **21.0** | **1313** | **17,700** | 24.0 | 1484 | 25,600 |
| IMR-4198 | 24.0 | 1417 | 17,000 | 27.0 | 1598 | 25,400 |
| RX7 | 24.0 | 1549 | 24,400 | 26.7 | 1634 | 27,200 |
| IMR-3031 | 28.5 | 1347 | 16,700 | 32.0 | 1605 | 23,500 |
| IMR-4895 | 30.0 | 1374 | 17,000 | 33.5+ | 1582 | 24,200 |

# 375 Winchester

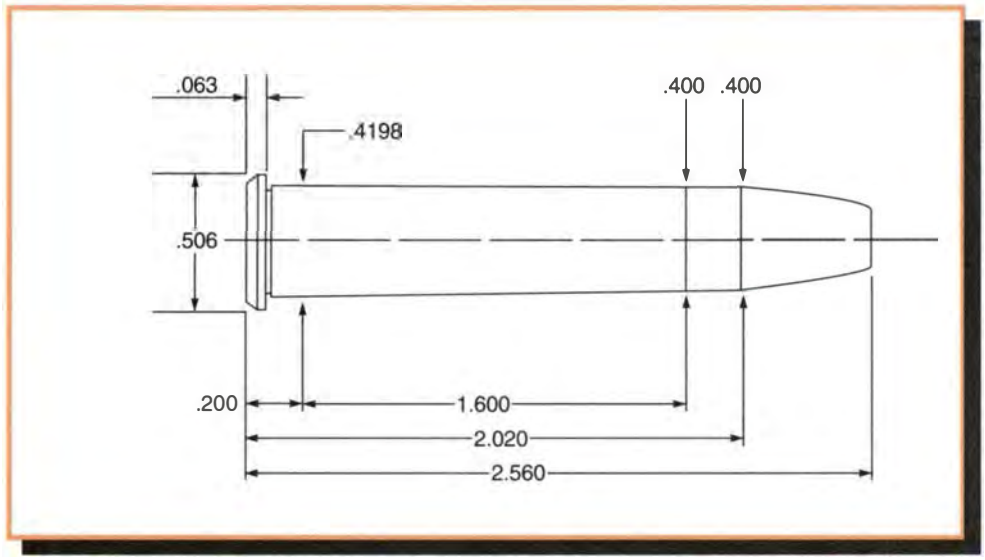


**Comments:**

This cartridge was the first attempt to beef up the ballistics that could be obtained with a 94 Winchester carbine. Basically it is the rebirth of the 38-55 loaded to higher pressure levels. The rifle was called the Big Bore.

Never put a 375 Winchester round into a 38-55 Winchester. Nor should you attempt to use 38-55 ammo in the 375 Winchester. Incompatible neck diameters can cause serious hazard.

**Test Components:**

Cases . . . . . .Winchester
Trim-to Length . . . . . .2.010"
Primers . . . . . .Winchester WLR
Primer Size . . . . . .Large Rifle
Lyman Shell Holder . . . . . .No. 6
Jacketed Bullets Used . . . .Hornady FP #3705, 220 gr.
Barnes FP #375W20, 255 gr.
Cast Bullets Used . . . . . .(sized to .377" dia)
*gas check bullet #375248, 249 gr.
*#375449, 264 gr.

**Test Specifications:**
**(Velocity & Pressure)**

Firearm Used . . . . . .Winchester Model 94 Big Bore Universal Receiver
Barrel Length . . . . . .Winchester; 20"
Universal Receiver; 24"
Twist . . . . . .1-12"
Groove Dia. . . . . .376"

**220 gr. Jacketed FP**
2.500" OAL
**BC:** .217
**SD:** .223

| Powder | Sugg Starting Grains | Velocity fps | Pressure C.U.P. | Max Load Grains | Velocity fps | Pressure C.U.P. |
|---|---|---|---|---|---|---|
| IMR-4198 | 29.0 | 1949 | 44,100 | 33.0 | 2145 | 50,900 |
| **RX7** | 34.0 | 2031 | 31,000 | **38.0+** | **2259** | **42,100** |
| IMR-3031 | 30.3 | 1732 | 31,700 | 35.0+ | 1983 | 40,700 |
| 748 | 38.0 | 1705 | 25,200 | 41.5+ | 1879 | 30,800 |
| H-4895 | 34.3 | 1868 | 30,000 | 38.0+ | 2069 | 36,600 |
| AA2230 | 37.5 | 1951 | 34,900 | 42.0+ | 2178 | 44,500 |
| AA2460 | 38.0 | 1991 | 33,800 | 42.0+ | 2162 | 41,700 |

**255 gr. Jacketed FP**
2.560" OAL
**BC:** .290
**SD:** .259

| Powder | Sugg Starting Grains | Velocity fps | Pressure C.U.P. | Max Load Grains | Velocity fps | Pressure C.U.P. |
|---|---|---|---|---|---|---|
| IMR-4198 | 23.0 | 1542 | 34,500 | 25.7+ | 1743 | 48,700 |
| RX7 | 25.2 | 1599 | 30,000 | 29.0+ | 1781 | 33,700 |
| IMR-3031 | 26.8 | 1547 | 35,800 | 32.0+ | 1771 | 40,900 |
| **H-322** | 29.4 | 1736 | 36,500 | **34.0+** | **1940** | **45,800** |
| H-4895 | 30.0 | 1632 | 27,300 | 34.0+ | 1838 | 35,500 |
| AA2230 | 35.5 | 1844 | 37,700 | 40.5+ | 2045 | 48,400 |
| AA2460 | 34.5 | 1796 | 37,800 | 39.0+ | 1977 | 47,100 |

**Note:** Loads shown in shaded panels are maximum.
Loads shown in bold designate potentially most accurate load.
+ Designates a compressed powder charge.

# 375 Winchester

***#375248**
249 gr. (#2 Alloy) 2.450" OAL
**BC:** .290
**SD:** .250

| Powder | Sugg Starting Grains | Velocity fps | Pressure C.U.P. | Max Load Grains | Velocity fps | Pressure C.U.P. |
|---|---|---|---|---|---|---|
| 2400 | 20.0 | 1595 | — | 24.0 | 1897 | — |
| **SR-4759** | **21.0** | **1606** | — | 26.0+ | 1866 | — |
| **IMR-4227** | **22.0** | **1617** | — | 26.0 | 1925 | — |
| IMR-4198 | 24.0 | 1581 | — | 28.5+ | 1907 | — |
| RX7 | 27.5 | 1614 | — | 32.0+ | 1811 | — |
| IMR-3031 | 27.0 | 1563 | — | 31.4+ | 1771 | — |

***#375449**
264 gr. (#2 Alloy) 2.560" OAL
**BC:** .315
**SD:** .265

| Powder | Sugg Starting Grains | Velocity fps | Pressure C.U.P. | Max Load Grains | Velocity fps | Pressure C.U.P. |
|---|---|---|---|---|---|---|
| 2400 | 19.5 | 1503 | — | 24.3 | 1806 | — |
| **SR-4759** | **20.0** | **1502** | — | 24.0 | 1738 | — |
| IMR-4227 | 21.0 | 1520 | — | 24.8 | 1807 | — |
| IMR-4198 | 23.0 | 1496 | — | 25.5 | 1769 | — |
| RX7 | 25.0 | 1507 | — | 32.0+ | 1762 | — |
| IMR-3031 | 26.2 | 1484 | — | 32.0+ | 1770 | — |

**Note:** Loads shown in shaded panels are maximum.
Loads shown in bold designate potentially most accurate load.
\+ Designates a compressed powder charge.
* Fired in a Winchester Model 94.

# 375 H & H Magnum (375 Holland & Holland)

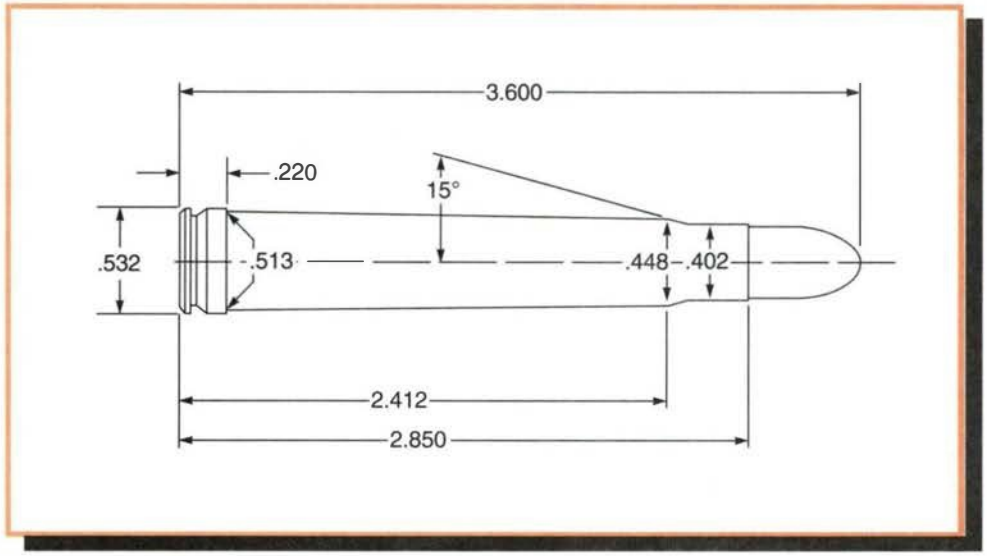


**Comments:**

This is the godfather of modern belted magnums. Introduced by Holland and Holland in 1912, it sired the 300 H&H in 1925. These two cartridges thus served as the basis for almost every popular belted magnum since. The 375 H&H made its reputation in Africa over many years. It may be considered a bit overpowered for much of the lower 48 but has seen quite a bit of use in Alaska. The 375 is one of the few magnums that actually uses the belt for proper headspacing due to the long, sloping configuration of the case. The length of this cartridge mandates use of a long, magnum length action. The big H&H properly loaded with the right bullets is also an exceptionally accurate, flat shooting cartridge. Do not attempt to crimp bullets without a cannelure. IMR-4350 and Reloder 15 are good powder selections for loading the 375.

**Test Components:**

Cases . . . . . .Winchester
Trim-to Length . . . . . .2.840"
Primers . . . . . .Winchester WLRM
Primer Size . . . . . .Large Rifle Magnum
Lyman Shell Holder . . . . . .No. 13
Jacketed Bullets Used . . .Barnes XLC #37553, 235 gr.
Nosler Partition #44850, 260 gr.
Combined Tech. Fail-Safe, #53350, 270 gr.
Speer Grand Slam #2473, 285 gr.
Swift A-Frame, 300 gr.
Cast Bullets Used . . . . . .(sized to .378" dia)
*gas check bullet *#375449
#378674

**Test Specifications:**
**(Velocity Only)**

Firearm Used . . . . . .Winchester Model 70
Barrel Length . . . . . .24"
Twist . . . . . .1-12"
Groove Dia. . . . . .377"

**235 gr. Barnes XLC** — 3.570" OAL — BC: .400 SD: .239

| Powder | Sugg Starting Grains | Velocity fps | Pressure C.U.P. | Max Load Grains | Velocity fps | Pressure C.U.P. |
|---|---|---|---|---|---|---|
| IMR-3031 | 64.0 | 2591 | — | 71.0 | 2857 | — |
| **IMR-4895** | **66.0** | **2593** | — | 73.0 | 2864 | — |
| IMR-4064 | 67.5 | 2583 | — | 75.0+ | 2845 | — |
| N140 | 68.0 | 2626 | — | 76.0 | 2832 | — |
| RX15 | 70.0 | 2690 | — | 78.0+ | 2974 | — |
| H-380 | 73.0 | 2556 | — | 81.0+ | 2748 | — |

**260 gr. Jacketed SP** — 3.570" OAL — BC: .314 SD: .264

| Powder | Sugg Starting Grains | Velocity fps | Pressure C.U.P. | Max Load Grains | Velocity fps | Pressure C.U.P. |
|---|---|---|---|---|---|---|
| IMR-4895 | 63.0 | 2414 | — | 70.5 | 2719 | — |
| IMR-4064 | 66.0 | 2433 | — | 73.0 | 2697 | — |
| RX15 | 67.5 | 2572 | — | 75.0 | 2825 | — |
| H-380 | 71.0 | 2481 | — | 78.5 | 2704 | — |
| AA2700 | 69.0 | 2449 | — | 77.0 | 2694 | — |
| **N160** | 76.0 | 2496 | — | **84.5+** | **2752** | — |
| XMR-4350 | 75.0 | 2401 | — | 84.0+ | 2680 | — |

**Note:** Loads shown in shaded panels are maximum.
Loads shown in bold designate potentially most accurate load.
\+ Designates a compressed powder charge.

# 375 H & H Magnum (375 Holland & Holland)

**270 gr. Jacketed Fail-Safe** — 3.600" OAL — **BC:** .393 **SD:** .274

| Powder | Sugg Starting Grains | Velocity fps | Pressure | Max Load Grains | Velocity fps | Pressure |
|---|---|---|---|---|---|---|
| IMR-4064 | 64.0 | 2403 | — | 71.5 | 2628 | — |
| RX15 | 66.0 | 2488 | — | 73.5 | 2742 | — |
| H-380 | 68.0 | 2347 | — | 76.0+ | 2541 | — |
| AA2700 | 71.0 | 2448 | — | 79.0+ | 2537 | — |
| **N160** | 75.0 | 2344 | — | **83.0+** | **2622** | — |
| IMR-4350 | 75.0 | 2398 | — | 83.0+ | 2707 | — |
| XMR-4350 | 75.0 | 2351 | — | 83.5+ | 2629 | — |

**285 gr. Jacketed SP** — 3.600" OAL — **BC:** .354 **SD:** .290

| Powder | Sugg Starting Grains | Velocity fps | Pressure | Max Load Grains | Velocity fps | Pressure |
|---|---|---|---|---|---|---|
| IMR-4895 | 57.0 | 2130 | — | 63.5 | 2360 | — |
| IMR-4064 | 62.0 | 2254 | — | 69.0 | 2521 | — |
| RX15 | 63.0 | 2324 | — | 70.0 | 2545 | — |
| AA2700 | 66.0 | 2168 | — | 73.5 | 2446 | — |
| N160 | 72.5 | 2303 | — | 80.5+ | 2595 | — |
| XMR-4350 | 73.0 | 2255 | — | 81.0+ | 2529 | — |
| **RX19** | 72.0 | 2242 | — | **80.0+** | **2506** | — |
| H-4831SC | 76.5 | 2262 | — | 85.0+ | 2545 | — |

**300 gr. Jacketed A-Frame** — 3.550" OAL — **BC:** .325 **SD:** .305

| Powder | Sugg Starting Grains | Velocity fps | Pressure | Max Load Grains | Velocity fps | Pressure |
|---|---|---|---|---|---|---|
| IMR-4064 | 61.0 | 2219 | — | 68.0 | 2469 | — |
| RX15 | 60.0 | 2244 | — | 67.0 | 2468 | — |
| AA2700 | 67.5 | 2375 | — | 75.0 | 2556 | — |
| N160 | 73.0 | 2298 | — | 81.5+ | 2570 | — |
| **XMR-4350** | **71.0** | **2209** | — | 79.0+ | 2508 | — |
| IMR-4350 | 73.0 | 2369 | — | 81.0+ | 2629 | — |
| RX19 | 70.0 | 2170 | — | 78.0+ | 2448 | — |
| H-4831SC | 76.0 | 2232 | — | 84.0+ | 2490 | — |

**#375449** — 264 gr. (#2 Alloy) 3.440" OAL — **BC:** .315 **SD:** .264

| Powder | Sugg Starting Grains | Velocity fps | Pressure | Max Load Grains | Velocity fps | Pressure |
|---|---|---|---|---|---|---|
| SR-4759 | 21.0 | 1372 | — | 32.0 | 1858 | — |
| XMP-5744 | 27.0 | 1461 | — | 34.0 | 1736 | — |
| **IMR-4198** | 24.0 | 1387 | — | **35.0** | **1813** | — |
| RX7 | 26.0 | 1422 | — | 34.0 | 1698 | — |

**#378674** — 335 gr. (#2 Alloy) 3.570" OAL — **BC:** .360 **SD:** .335

| Powder | Sugg Starting Grains | Velocity fps | Pressure | Max Load Grains | Velocity fps | Pressure |
|---|---|---|---|---|---|---|
| SR-4759 | 23.0 | 1353 | — | 32.5 | 1759 | — |
| **XMP-5744** | 26.0 | 1329 | — | **36.0** | **1725** | — |
| IMR-4198 | 25.0 | 1314 | — | 36.0 | 1717 | — |
| RX7 | 27.0 | 1367 | — | 37.5 | 1726 | — |

**Note:** Loads shown in shaded panels are maximum.
Loads shown in bold designate potentially most accurate load.
\+ Designates a compressed powder charge.

# 375 Remington Ultra Mag

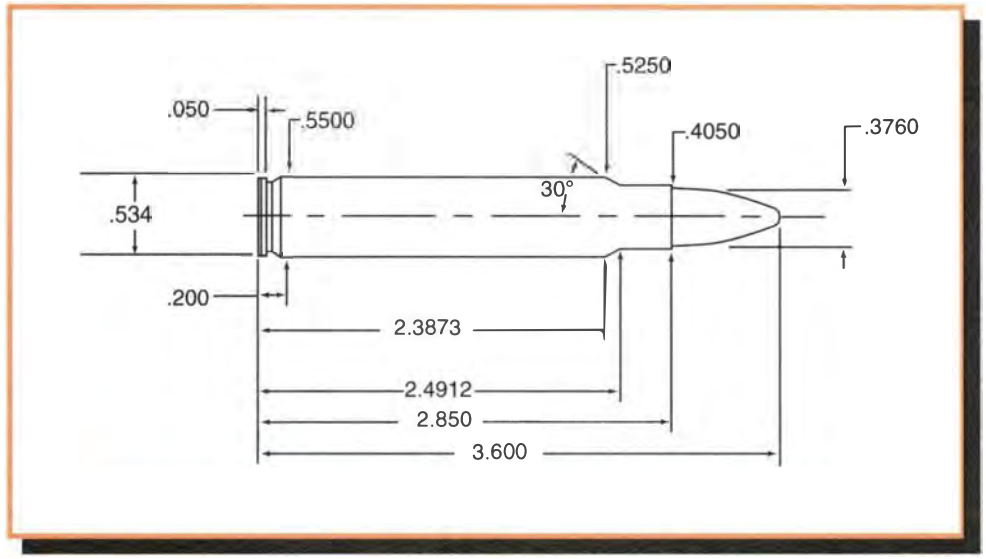


**Comments:**

Remington introduced their 375, the largest of the Ultra Mag family, in 2001. The 375 Ultra Mag offers approximately 25 percent more capacity than the old standby, the 375 Holland and Holland. The Ultra Mag produces on average some 300 feet per second increase in velocity over the H&H. A cartridge of the magnitude of the 375 Ultra Mag mandates the use of premium bullets such as the Barnes X, Speer Grand Slam, or Swift A-Frame. Do not attempt to roll crimp bullets without a cannelure. IMR-4831 produced the most uniform results with several different bullet weights. The 375 Ultra would seem to be somewhat over powered for the lower 48 but should make a name for itself in Africa.

**Test Components:**

Cases . . . . . .Remington
Trim-to Length . . . . . .2.840"
Primers . . . . . .Federal 215
Primer Size . . . . . .Large Rifle, Magnum
Lyman Shell Holder . . . . . .No. 13
Jacketed Bullets Used . . . . . .Speer SP #2471, 235 gr.
Nosler Partition #44850, 260 gr.
Barnes X #37585, 270 gr.
Speer Grand Slam #2473, 285 gr.
Swift A-Frame, 300 gr.
Barnes RN Solid #37525, 300 gr.

**Test Specifications:**
**(Velocity & Pressure)**

Firearm Used . . . . . .Universal Receiver
Barrel Length . . . . . .26"
Twist . . . . . .1-12"
Groove Dia. . . . . .375"

**235 gr. Jacketed SP** — 3.550" OAL — **BC:** .317 **SD:** .239

| Powder | Sugg Starting Grains | Velocity fps | Pressure P.S.I. | Max Load Grains | Velocity fps | Pressure P.S.I. |
|---|---|---|---|---|---|---|
| AA-2700 | 91.0 | 3038 | 54,700 | 99.0 | 3212 | 61,000 |
| 760 | 92.0 | 3087 | 57,100 | 100.0 | 3245 | 62,500 |
| H-414 | 92.0 | 3111 | 59,300 | 100.5+ | 3262 | 64,400 |
| **N160** | 96.0 | 2989 | 47,400 | **104.0+** | **3239** | **61,200** |
| IMR-4350 | 93.0 | 2952 | 47,200 | 101.0 | 3253 | 62,900 |
| XMR-4350 | 95.0 | 2946 | 44,400 | 103.0+ | 3224 | 58,800 |
| RX19 | 99.0 | 2977 | 47,700 | 108.0+ | 3245 | 61,000 |
| IMR-4831 | 98.0 | 2965 | 48,300 | 106.0+ | 3235 | 62,300 |
| H-4831 | 99.0 | 2906 | 46,400 | 108.0+ | 3148 | 59,400 |
| WXR | 99.0 | 2975 | 47,700 | 108.0+ | 3230 | 61,300 |
| Mag Pro | 103.0 | 2962 | 41,500 | 115.0+ | 3218 | 51,800 |

**260 gr. Jacketed SP** — 3.565" OAL — **BC:** .314 **SD:** .264

| Powder | Sugg Starting Grains | Velocity fps | Pressure P.S.I. | Max Load Grains | Velocity fps | Pressure P.S.I. |
|---|---|---|---|---|---|---|
| H-414 | 82.0 | 2677 | 48,500 | 89.0 | 2926 | 59,900 |
| N160 | 86.0 | 2766 | 48,500 | 94.0 | 2980 | 60,200 |
| IMR-4350 | 86.0 | 2734 | 45,800 | 93.5 | 3005 | 60,700 |
| XMR-4350 | 86.0 | 2740 | 45,500 | 94.0 | 3008 | 60,600 |
| RX19 | 90.0 | 2730 | 45,400 | 97.5 | 2995 | 59,300 |
| **IMR-4831** | 88.0 | 2715 | 45,600 | **96.0** | **3003** | **61,100** |
| H-4831 | 93.0 | 2711 | 45,500 | 100.5 | 2973 | 61,600 |
| WXR | 89.0 | 2766 | 48,600 | 96.7 | 2978 | 59,100 |
| Mag Pro | 94.0 | 2662 | 37,600 | 104.0+ | 2985 | 52,100 |

**Note:** Loads shown in shaded panels are maximum.
Loads shown in bold designate potentially most accurate load.
\+ Designates a compressed powder charge.

# 375 Remington Ultra Mag

**270 gr. Barnes X**
3.565" OAL
**BC:** .503
**SD:** .275

| Powder | Sugg Starting Grains | Velocity fps | Pressure P.S.I. | Max Load Grains | Velocity fps | Pressure P.S.I. |
|---|---|---|---|---|---|---|
| H-414 | 83.0 | 2669 | 47,700 | 90.0 | 2910 | 60,400 |
| N160 | 88.0 | 2729 | 48,600 | 95.0 | 2954 | 61,100 |
| IMR-4350 | 85.0 | 2687 | 46,900 | 92.5 | 2938 | 60,000 |
| XMR-4350 | 88.0 | 2740 | 48,400 | 95.0 | 2983 | 61,700 |
| **IMR-4831** | 90.0 | 2730 | 49,300 | **98.0** | **2968** | **60,100** |
| **RX19** | 91.0 | 2739 | 48,500 | **99.0** | **2989** | **61,500** |
| H-4831 | 93.0 | 2725 | 50,400 | 100.5+ | 2920 | 61,200 |
| WXR | 91.0 | 2745 | 49,200 | 99.0+ | 2984 | 61,300 |
| IMR-7828 | 92.0 | 2682 | 46,200 | 100.0+ | 2923 | 57,000 |
| Mag Pro | 99.0 | 2763 | 43,700 | 110.0+ | 3032 | 55,860 |

**285 gr. Jacketed SP**
3.570" OAL
**BC:** .354
**SD:** .290

| Powder | Sugg Starting Grains | Velocity fps | Pressure P.S.I. | Max Load Grains | Velocity fps | Pressure P.S.I. |
|---|---|---|---|---|---|---|
| H-414 | 81.0 | 2631 | 49,000 | 88.0 | 2850 | 60,000 |
| N160 | 86.0 | 2650 | 46,600 | 93.5 | 2891 | 60,800 |
| IMR-4350 | 85.0 | 2657 | 46,400 | 92.0 | 2921 | 61,700 |
| XMR-4350 | 86.0 | 2623 | 44,000 | 93.0 | 2901 | 60,900 |
| **IMR-4831** | 88.0 | 2646 | 46,200 | **96.0** | **2920** | **61,900** |
| RX19 | 90.0 | 2650 | 44,500 | 97.5 | 2925 | 60,100 |
| XMR-3100 | 90.0 | 2623 | 45,900 | 97.2+ | 2875 | 60,000 |
| H-4831 | 91.0 | 2630 | 46,400 | 98.5 | 2872 | 61,000 |
| RX22 | 90.0 | 2762 | 50,700 | 97.0 | 2960 | 61,000 |
| WXR | 90.0 | 2676 | 46,400 | 98.0 | 2929 | 61,100 |
| IMR-7828 | 92.0 | 2681 | 47,200 | 100.0+ | 2944 | 61,200 |

**300 gr. Jacketed A-Frame**
3.550" OAL
**BC:** .325
**SD:** .305

| Powder | Sugg Starting Grains | Velocity fps | Pressure P.S.I. | Max Load Grains | Velocity fps | Pressure P.S.I. |
|---|---|---|---|---|---|---|
| N160 | 83.0 | 2542 | 46,400 | 90.5 | 2773 | 59,900 |
| IMR-4350 | 83.0 | 2560 | 46,300 | 89.5 | 2802 | 60,300 |
| XMR-4350 | 84.0 | 2552 | 45,200 | 90.5 | 2803 | 60,900 |
| RX19 | 88.0 | 2578 | 45,700 | 95.0 | 2835 | 60,900 |
| XMR-3100 | 88.0 | 2524 | 45,200 | 95.5 | 2784 | 60,700 |
| **H-4831** | 89.0 | 2575 | 48,200 | **97.0** | **2794** | **61,600** |
| RX22 | 85.0 | 2638 | 50,000 | 92.0 | 2820 | 59,500 |
| N165 | 89.0 | 2581 | 45,800 | 97.0 | 2805 | 58,900 |
| WXR | 86.0 | 2568 | 46,300 | 93.5 | 2809 | 60,500 |
| IMR-7828 | 89.0 | 2559 | 45,800 | 97.0 | 2823 | 60,500 |

**300 gr. RN Solid**
3.590" OAL
**BC:** .307
**SD:** .305

| Powder | Sugg Starting Grains | Velocity fps | Pressure P.S.I. | Max Load Grains | Velocity fps | Pressure P.S.I. |
|---|---|---|---|---|---|---|
| N160 | 89.0 | 2685 | 50,500 | 96.0 | 2861 | 60,100 |
| IMR-4350 | 86.0 | 2681 | 50,300 | 93.5 | 2877 | 60,700 |
| XMR-4350 | 89.0 | 2698 | 49,800 | 97.0+ | 2895 | 60,700 |
| RX19 | 92.0 | 2661 | 47,000 | 100.0+ | 2893 | 59,300 |
| XMR-3100 | 91.0 | 2585 | 45,800 | 99.0+ | 2830 | 59,300 |
| H-4831 | 91.0 | 2619 | 48,400 | 99.0+ | 2806 | 59,000 |
| **RX22** | 91.0 | 2662 | 46,400 | **99.0+** | **2893** | **58,100** |
| IMR-7828 | 91.0 | 2566 | 43,600 | 99.0+ | 2791 | 54,600 |
| Mag Pro | 94.5 | 2610 | 40,900 | 105.0+ | 2870 | 53,000 |

**Note:** Loads shown in shaded panels are maximum.
Loads shown in bold designate potentially most accurate load.
\+ Designates a compressed powder charge.

# 378 Weatherby Magnum

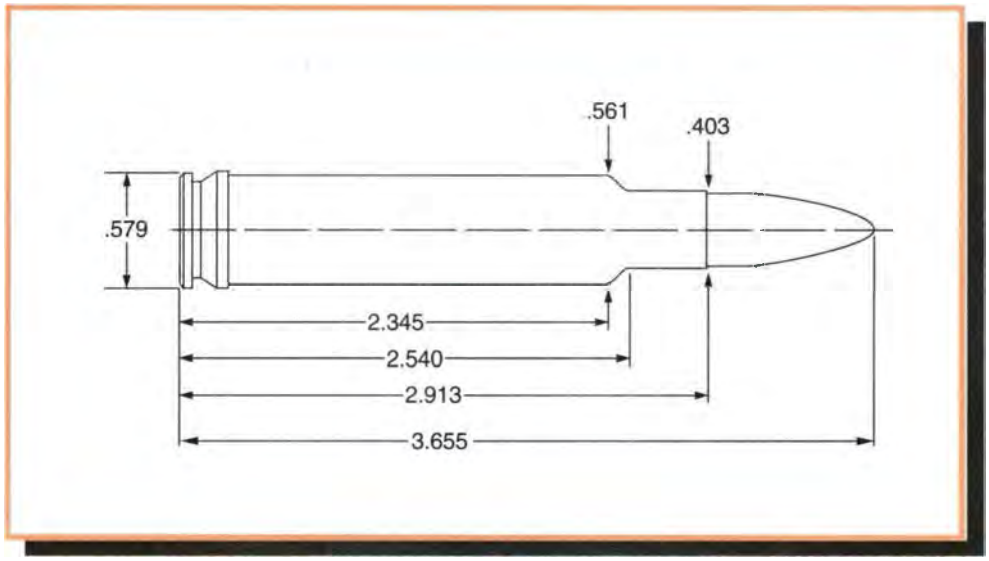


**Comments:**

This is one of the world's most powerful cartridges. It uses the 416 Rigby case necked down to accept a 0.375" bullet. Its recoil is in proportion to its enormous power. Few shooters can handle this cartridge unless the rifle is equipped with a muzzle brake. Due to extremely heavy recoil, the crimping of all bullets is urged.

With a muzzle brake and good reloads it is not difficult to get groups approaching one inch at 100 yards. Very strong premium grade bullets are required to withstand impact forces. Lesser bullets will simply disintegrate before penetration. Popular priced bullets are satisfactory for range practice. Shooters will need practice to avoid flinching when using this round. It is the smallest diameter round that many serious African professional hunters will recommend for cape buffalo or elephant.

Magnum primers are essential to igniting the heavy powder charges. The Federal 215 primer is exclusively recommended by Weatherby.

The accompanying data is for use only in Weatherby Mark V rifles.

**Test Components:**

Cases . . . . . .Weatherby
Trim-to Length . . . . . .2.903"
Primers . . . . . .Federal 215 & 210
Primer Size . . . . . .Large Rifle, Magnum & Standard
Lyman Shell Holder . . . . . .No. 17
Jacketed Bullets Used . . . . .Barnes X #37585, 270 gr.
Barnes RN Solid, #37525, 300 gr.
Cast Bullets Used . . . . . .(sized to .375" dia)
*gas check bullet #375248, 249 gr.
*#375449, 264 gr.

**Test Specifications: (Velocity Only)**

Firearm Used . . . . . .Weatherby Mk V
Barrel Length . . . . . .26"
Twist . . . . . .1-12"
Groove Dia. . . . . .375"

**270 gr. Barnes X** — 3.625" OAL — **BC:** .503 **SD:** .275

| Powder | Sugg Starting Grains | Velocity fps | Pressure | Max Load Grains | Velocity fps | Pressure |
|---|---|---|---|---|---|---|
| XMR-4350 | 98.0 | 2738 | — | 103.0 | 2946 | — |
| **RX19** | **102.0** | **2842** | — | 107.0 | 3016 | — |
| H-4831 | 105.0 | 2788 | — | 110.0 | 2939 | — |
| RX22 | 105.0 | 2817 | — | 110.0 | 2962 | — |
| IMR-7828 | 105.0 | 2791 | — | 110.0 | 2956 | — |

**300 gr. RN Solid** — 3.625" OAL — **BC:** .307 **SD:** .305

| Powder | Sugg Starting Grains | Velocity fps | Pressure | Max Load Grains | Velocity fps | Pressure |
|---|---|---|---|---|---|---|
| **RX19** | 100.0 | 2756 | — | **105.0** | **2921** | — |
| XMR-3100 | 100.0 | 2655 | — | 105.0 | 2791 | — |
| H-4831 | 104.0 | 2739 | — | 109.0 | 2862 | — |
| RX22 | 104.0 | 2725 | — | 109.0 | 2842 | — |
| IMR-7828 | 103.0 | 2719 | — | 108.0 | 2845 | — |

**Note:** Loads shown in shaded panels are maximum.
Loads shown in bold designate potentially most accurate load.

# 378 Weatherby Magnum

***#375248**
249 gr. (#2 Alloy) 3.325" OAL
**BC:** .290
**SD:** .253

| Powder | Sugg Starting Grains | Velocity fps | Pressure | Max Load Grains | Velocity fps | Pressure |
|---|---|---|---|---|---|---|
| **SR-4759** | **26.0** | **1535** | — | 35.0 | 1883 | — |
| IMR-4227 | 30.0 | 1509 | — | 40.0 | 1899 | — |
| XMP-5744 | 29.0 | 1525 | — | 42.0 | 1907 | — |
| IMR-4198 | 29.0 | 1538 | — | 42.5 | 1936 | — |
| RX7 | 32.0 | 1506 | — | 45.0 | 1920 | — |

***#375449**
264 gr. (#2 Alloy) 3.500" OAL
**BC:** .315
**SD:** .268

| Powder | Sugg Starting Grains | Velocity fps | Pressure | Max Load Grains | Velocity fps | Pressure |
|---|---|---|---|---|---|---|
| SR-4759 | 28.0 | 1558 | — | 38.5 | 1941 | — |
| IMR-4227 | 32.0 | 1562 | — | 46.0 | 1992 | — |
| **XMP-5744** | **32.0** | **1574** | — | 46.0 | 2014 | — |
| IMR-4198 | 31.0 | 1560 | — | 45.0 | 1982 | — |
| **RX7** | **33.0** | **1580** | — | 50.0 | 1990 | — |

**Note:** Loads shown in shaded panels are maximum.
Loads shown in bold designate potentially most accurate load.
* Indicates use of Federal 210 primers.

# 40 Smith & Wesson (Rifle Data)

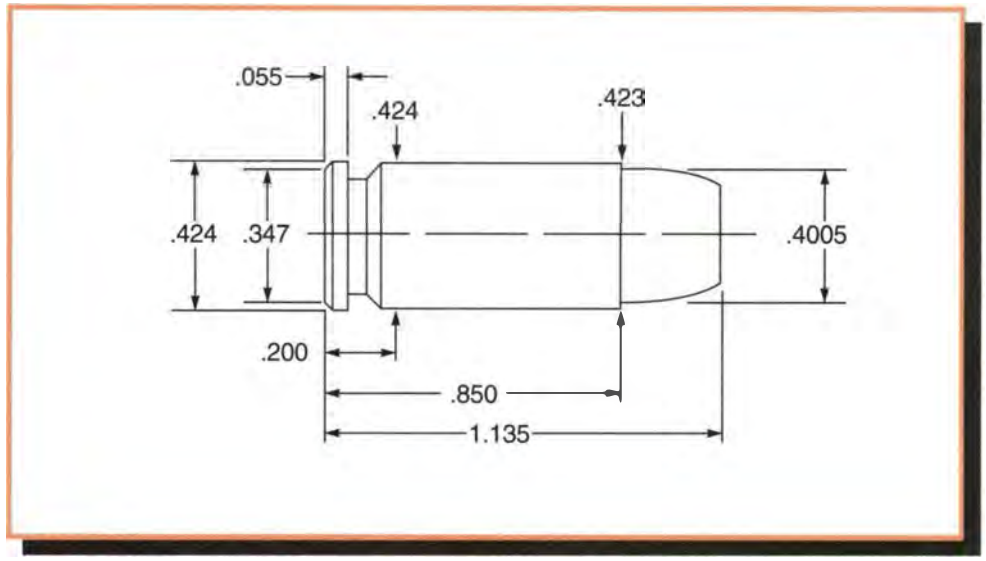


**Comments:**

The 40 Smith and Wesson has achieved widespread, popular acceptance since its introduction in 1992. It was only a matter of time before it was offered in a lightweight carbine. Loading for the 40 S &W is no different than any other auto loading pistol cartridge. The ballistics listed below were worked up in a pressure barrel and fired through a Ruger PC-4 Carbine. **Do not go below listed starting charges.** Doing so may cause a bullet to lodge in the rifle-length barrel. Firing a round with a bullet stuck in the barrel is extremely dangerous.

**Test Components:**

Cases . . . . . .Winchester
Trim-to Length . . . . . ..847"
Primers . . . . . .Winchester WSP
Primer Size . . . . . .Small Pistol
Lyman Shell Holder . . . . . .No. 15
Jacketed Bullets Used . . . .Winchester Silvertip, 155 gr.
Speer TMJ #4410, 165 gr.
Winchester Silvertip, 175 gr.
Sierra JHP #8460, 180 gr.
Cast Bullets Used . . . . . .(sized to .401" dia)
#401654, 150 gr.
#401638, 175 gr.

**Test Specifications: (Velocity Only)**

Firearm Used . . . . . .Ruger Carbine, PC-4
Barrel Length . . . . . .16¼"
Twist . . . . . .1-16"
Groove Dia. . . . . .401"

**155 gr. Jacketed Silvertip** — 1.125" OAL — BC: .166 SD: .138

| Powder | Sugg Starting Grains | Velocity fps | Pressure | Max Load Grains | Velocity fps | Pressure |
|---|---|---|---|---|---|---|
| Bullseye | 5.1 | 1140 | — | 5.7 | 1257 | — |
| 231 | 5.3 | 1085 | — | 5.9 | 1204 | — |
| AA#5 | 7.1 | 1184 | — | 8.0 | 1295 | — |
| Unique | 5.8 | 1113 | — | 6.5 | 1219 | — |
| **Power Pistol** | 7.0 | 1320 | — | **7.8** | **1437** | — |
| N340 | 5.5 | 1008 | — | 6.2 | 1210 | — |
| HS-6 | 7.6 | 1143 | — | 8.5 | 1288 | — |
| 800X | 7.2 | 1228 | — | 8.0 | 1342 | — |
| Blue Dot | 8.2 | 1093 | — | 9.2 | 1235 | — |

**165 gr. Jacketed TMJ** — 1.120" OAL — BC: .135 SD: .147

| Powder | Sugg Starting Grains | Velocity fps | Pressure | Max Load Grains | Velocity fps | Pressure |
|---|---|---|---|---|---|---|
| 231 | 5.2 | 1105 | — | 5.8 | 1171 | — |
| **Unique** | 5.4 | 1092 | — | **6.0** | **1182** | — |
| Power Pistol | 6.3 | 1196 | — | 7.0 | 1319 | — |
| N340 | 5.4 | 1057 | — | 6.1 | 1189 | — |
| HS-6 | 7.6 | 1142 | — | 8.5 | 1276 | — |
| 800X | 7.2 | 1251 | — | 8.0 | 1322 | — |
| Blue Dot | 8.2 | 1146 | — | 9.2 | 1300 | — |

**Note:** Loads shown in shaded panels are maximum.
Loads shown in bold designate potentially most accurate load.

# 40 Smith & Wesson (Rifle Data)

**175 gr. Jacketed Silvertip**
1.125" OAL
**BC:** .142
**SD:** .155

| Powder | Sugg Starting Grains | Velocity fps | Pressure | Max Load Grains | Velocity fps | Pressure |
|---|---|---|---|---|---|---|
| Bullseye | 4.7 | 1021 | — | 5.3 | 1156 | — |
| 231 | 5.1 | 1016 | — | 5.7 | 1116 | — |
| Unique | 5.3 | 984 | — | 5.9 | 1134 | — |
| Power Pistol | 6.0 | 1090 | — | 6.7 | 1229 | — |
| Universal | 4.9 | 955 | — | 5.5 | 1091 | — |
| **N340** | 5.4 | 1042 | — | **6.0** | **1161** | — |
| WSF | 5.8 | 1075 | — | 6.5 | 1164 | — |
| HS-6 | 6.9 | 1006 | — | 7.7 | 1127 | — |
| 800X | 6.8 | 1136 | — | 7.6 | 1242 | — |
| Blue Dot | 7.9 | 1066 | — | 8.8 | 1231 | — |

**180 gr. Jacketed HP**
1.115" OAL
**BC:** .140
**SD:** .161

| Powder | Sugg Starting Grains | Velocity fps | Pressure | Max Load Grains | Velocity fps | Pressure |
|---|---|---|---|---|---|---|
| Bullseye | 5.0 | 1095 | — | 5.6 | 1196 | — |
| 231 | 5.3 | 1082 | — | 5.9 | 1161 | — |
| Unique | 5.2 | 1030 | — | 5.8 | 1128 | — |
| Power Pistol | 6.0 | 1106 | — | 6.7 | 1231 | — |
| Universal | 4.9 | 1019 | — | 5.5 | 1119 | — |
| N340 | 5.4 | 1087 | — | 6.0 | 1172 | — |
| WSF | 5.5 | 1051 | — | 6.2 | 1157 | — |
| HS-6 | 7.2 | 1101 | — | 8.0 | 1236 | — |
| **800X** | 6.6 | 1145 | — | **7.4** | **1238** | — |
| Blue Dot | 7.9 | 1124 | — | 8.8 | 1273 | — |

**#401654**
150 gr. (#2 Alloy) 1.090" OAL
**BC:** .074
**SD:** .133

| Powder | Sugg Starting Grains | Velocity fps | Pressure | Max Load Grains | Velocity fps | Pressure |
|---|---|---|---|---|---|---|
| Bullseye | 5.4 | 1252 | — | 6.0 | 1338 | — |
| AA#2 | 5.7 | 1238 | — | 6.4 | 1333 | — |
| 231 | 5.8 | 1265 | — | 6.5 | 1365 | — |
| AA#5 | 6.7 | 1104 | — | 7.5 | 1221 | — |
| Unique | 5.6 | 1123 | — | 6.3 | 1264 | — |
| **Power Pistol** | 6.3 | 1253 | — | **7.0** | **1344** | — |
| N340 | 5.3 | 1121 | — | 5.9 | 1240 | — |
| HS-6 | 7.9 | 1221 | — | 8.8 | 1377 | — |
| 800X | 7.2 | 1267 | — | 8.0 | 1364 | — |
| Blue Dot | 8.6 | 1256 | — | 9.6 | 1390 | — |

**#401638**
175 gr. (#2 Alloy) 1.100" OAL
**BC:** .088
**SD:** .155

| Powder | Sugg Starting Grains | Velocity fps | Pressure | Max Load Grains | Velocity fps | Pressure |
|---|---|---|---|---|---|---|
| Bullseye | 4.5 | 1071 | — | 5.0 | 1159 | — |
| 231 | 5.2 | 1124 | — | 5.8 | 1200 | — |
| AA#5 | 6.2 | 1047 | — | 6.9 | 1159 | — |
| Unique | 5.2 | 1091 | — | 5.8 | 1184 | — |
| **Power Pistol** | 5.8 | 1136 | — | **6.5** | **1251** | — |
| N340 | 4.8 | 1001 | — | 5.4 | 1160 | — |
| HS-6 | 7.5 | 1211 | — | 8.4 | 1344 | — |
| 800X | 6.8 | 1177 | — | 7.6 | 1298 | — |
| Blue Dot | 7.7 | 1184 | — | 8.6 | 1292 | — |

**Note:** Loads shown in shaded panels are maximum.
Loads shown in bold designate potentially most accurate load.

# 40-65 Winchester

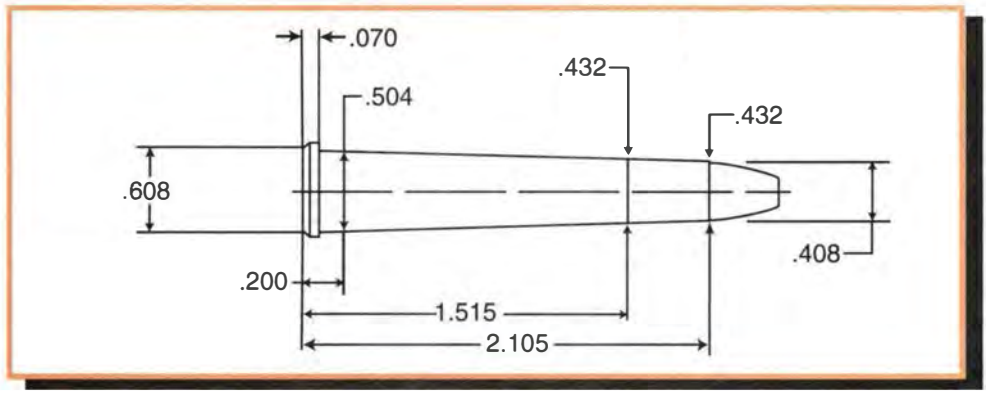


**Comments:**

Winchester introduced this cartridge in 1886 for use in both the 1885 single-shot and 1886 lever action. This was originally a black powder cartridge that survived in smokeless form before finally being dropped during the 1930s. This number has enjoyed resurgence in popularity in recent years in both Cowboy Action Shooting and Black Powder Cartridge Silhouette. The 40-65 has several factors in its favor; forming brass requires little more than running ever plentiful 45-70 Springfield cases through a full-length sizing die. Lyman offers several moulds producing bullets with good ballistic coefficients suitable long range shooting. Recoil with even the heaviest 400-grain bullets is mild thus enabling shooters to fire sixty-round matches without tiring out. Many older guns will show varying groove diameters, often around .406". Newly manufactured reproduction rifles utilize groove diameters of .408" to .409". All current Lyman die sets for the 40-65 are manufactured to accommodate .408"/ .409" bullet diameters. There is no SAAMI pressure limit for the 40-65. Lyman determined the maximum pressure limit used here by firing 40-65 cartridges loaded with compressed black powder in a special pressure barrel. Reloder 7 and XMP-5744 are excellent powder choices for this cartridge.

**This data is intended for use in modern, newly manufactured guns rated for smokeless powder. This data is not for use in antique guns originally built for black powder.**

**Test Components:**

Cases . . . . . .Remington
Trim-to Length . . . . . .2.100"
Primers . . . . . .Remington 9½
Primer Size . . . . . .Large Rifle
Lyman Shell Holder . . . . . .No. 17
Cast Bullets Used . . . . . .(sized to .410" dia)
#410660, 385 gr.
#410655, 400 gr.
#410663, 400 gr.

**Test Specifications:**
**(Velocity & Pressure)**

Firearm Used . . . . . .Universal Receiver
Barrel Length . . . . . .36"
Twist . . . . . .1-16"
Groove Dia. . . . . .409"

**#410660**
385 gr. (#2 Alloy) 2.940" OAL
**BC:** .352
**SD:** .327

| Powder | Sugg Starting Grains | Velocity fps | Pressure C.U.P. | Max Load Grains | Velocity fps | Pressure C.U.P. |
|---|---|---|---|---|---|---|
| SR-4759 | 19.0 | 1270 | 11,200 | 21.5 | 1398 | 17,800 |
| IMR-4198 | 21.5 | 1271 | 11,800 | 25.0 | 1431 | 16,600 |
| **XMP-5744** | 18.0 | 1135 | 11,900 | **21.0** | **1274** | **16,000** |
| RX7 | 22.0 | 1298 | 10,200 | 28.0 | 1516 | 17,800 |
| IMR-3031 | 28.0 | 1271 | 12,100 | 33.0 | 1525 | 18,200 |
| IMR-4895 | 29.5 | 1265 | 12,100 | 34.0 | 1472 | 17,700 |
| Varget | 31.5 | 1294 | 11,800 | 36.5 | 1543 | 18,100 |

**#410655**
400 gr. (#2 Alloy) 2.780" OAL
**BC:** .350
**SD:** .340

| Powder | Sugg Starting Grains | Velocity fps | Pressure C.U.P. | Max Load Grains | Velocity fps | Pressure C.U.P. |
|---|---|---|---|---|---|---|
| SR-4759 | 16.0 | 1113 | 11,200 | 19.0 | 1245 | 17,600 |
| IMR-4198 | 19.0 | 1179 | 14,400 | 22.0 | 1293 | 17,300 |
| XMP-5744 | 16.5 | 1073 | 13,800 | 20.0 | 1237 | 17,900 |
| RX7 | 17.0 | 1064 | 13,000 | 20.5 | 1200 | 17,300 |
| IMR-3031 | 25.0 | 1183 | 13,300 | 28.0 | 1334 | 16,900 |
| **IMR-4895** | 25.0 | 1215 | 15,400 | **29.0** | **1298** | **17,500** |
| Varget | 28.0 | 1173 | 10,400 | 32.5 | 1389 | 17,000 |

**#410663**
400 gr. (#2 Alloy) 2.860" OAL
**BC:** .435
**SD:** .340

| Powder | Sugg Starting Grains | Velocity fps | Pressure C.U.P. | Max Load Grains | Velocity fps | Pressure C.U.P. |
|---|---|---|---|---|---|---|
| SR-4759 | 17.0 | 1140 | 8,900 | 21.0 | 1373 | 17,900 |
| IMR-4198 | 21.0 | 1236 | 11,200 | 25.0 | 1442 | 18,700 |
| XMP-5744 | 17.5 | 1104 | 11,600 | 22.0 | 1307 | 18,500 |
| RX7 | 18.5 | 1208 | 15,300 | 23.5 | 1359 | 18,100 |
| IMR-3031 | 28.0 | 1258 | 11,100 | 33.0 | 1488 | 18,200 |
| **IMR-4895** | 28.0 | 1249 | 15,000 | **32.0** | **1483** | **17,800** |
| Varget | 28.5 | 1235 | 8,200 | 33.5 | 1418 | 17,000 |

**Note:** Loads shown in shaded panels are maximum.
Loads shown in bold designate potentially most accurate load.

# 40-70 Sharps Straight

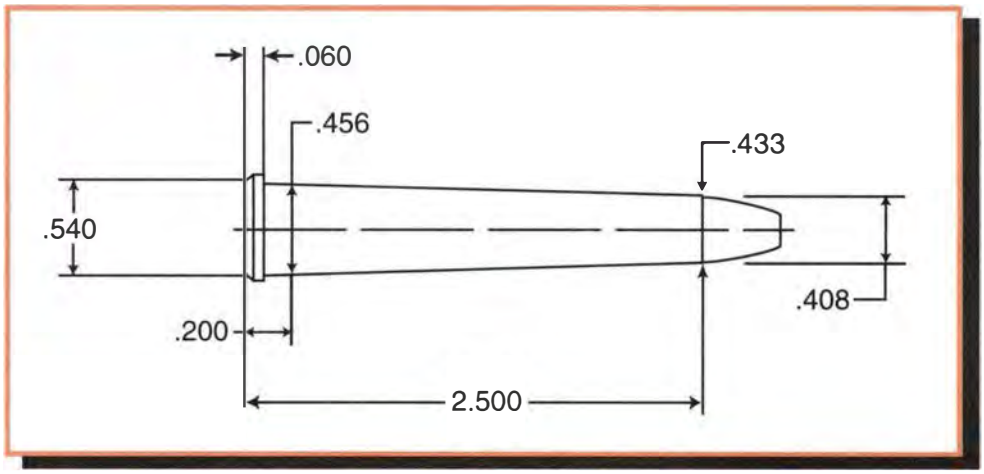


**Comments:**

This is yet another cartridge brought back from extinction by the Black Powder Cartridge Silhouette crowd. This cartridge dates to about 1876 and should not be confused with the bottlenecked 40-70 also produced by Sharps. Ballistics of the 40-70 Sharps Straight average around 70 to 100 feet per second over the 40-65 Winchester. Original Sharps specifications called for a (sometimes) paper-patched bullet of .403" diameter. Currently manufactured reproduction rifles feature groove diameters of .408"/. 409". All Lyman die sets for the 40-70 are designed for use with bullets sized to these diameters.

There is no SAAMI maximum average pressure for this cartridge. Lyman determined the maximum pressure limit of 20,000 CUP by firing 40-70 cartridges loaded with various granulations of compressed black powder in a special pressure test barrel. The cases used in load development were based on unformed, full-length (2½ inches long) 30-40 Krag cases with a Remington headstamp and were supplied by Buffalo Arms of Sandpoint, ID. Shooters loading cases of different manufacture may have different case volumes and should carefully work up loads.

**This data is intended for use in modern, newly manufactured guns rated for smokeless powder. This data is not for use in antique guns originally built for black powder.**

**Test Components:**

Cases . . . . . .Buffalo Arms
Trim-to Length . . . . . .2.490"
Primers . . . . . .Remington 9½
Primer Size . . . . . .Large Rifle
Lyman Shell Holder . . . . . .No. 33
Cast Bullets Used . . . . . .(sized to .409" dia)
#410660, 385 gr.
#410655, 400 gr.
#410663, 400 gr.

**Test Specifications:**
**(Velocity & Pressure)**

Firearm Used . . . . . .Universal Receiver
Barrel Length . . . . . .32"
Twist . . . . . .1-16"
Groove Dia. . . . . .4075"

**#410660**
385 gr. (#2 Alloy) 3.250" OAL
**BC:** .352
**SD:** .327

| Powder | Sugg Starting Grains | Velocity fps | Pressure C.U.P. | Max Load Grains | Velocity fps | Pressure C.U.P. |
|---|---|---|---|---|---|---|
| SR-4759 | 21.0 | 1162 | 8,300 | 24.0 | 1377 | 15,800 |
| XMP-5744 | 21.0 | 1115 | 10,700 | 26.5 | 1368 | 16,900 |
| IMR-4198 | 24.0 | 1269 | 12,000 | 30.0 | 1501 | 17,000 |
| RX7 | 23.0 | 1129 | 9,100 | 29.5 | 1452 | 16,700 |
| **IMR-3031** | 31.0 | 1225 | 8,900 | **37.5** | **1464** | **14,100** |
| Varget | 36.0 | 1337 | 10,100 | 42.5 | 1613 | 17,000 |

**#410655**
400 gr. (#2 Alloy) 3.115" OAL
**BC:** .350
**SD:** .340

| Powder | Sugg Starting Grains | Velocity fps | Pressure C.U.P. | Max Load Grains | Velocity fps | Pressure C.U.P. |
|---|---|---|---|---|---|---|
| SR-4759 | 19.0 | 1141 | 10,600 | 22.0 | 1332 | 17,300 |
| **XMP-5744** | 22.5 | 1224 | 14,100 | **25.0** | **1320** | **17,300** |
| IMR-4198 | 23.0 | 1250 | 12,600 | 27.2 | 1420 | 16,900 |
| RX7 | 22.0 | 1113 | 10,600 | 27.0 | 1375 | 17,100 |
| Varget | 31.0 | 1188 | 9,200 | 39.0 | 1535 | 17,200 |

**#410663**
400 gr. (#2 Alloy) 3.170" OAL
**BC:** .435
**SD:** .340

| Powder | Sugg Starting Grains | Velocity fps | Pressure C.U.P. | Max Load Grains | Velocity fps | Pressure C.U.P. |
|---|---|---|---|---|---|---|
| SR-4759 | 19.0 | 1172 | 10,700 | 21.5 | 1326 | 16,600 |
| XMP-5744 | 20.0 | 1086 | 11,700 | 25.0 | 1344 | 17,500 |
| **IMR-4198** | 21.0 | 1182 | 12,800 | **26.5** | **1401** | **17,300** |
| RX7 | 21.0 | 1084 | 10,000 | 26.5 | 1377 | 16,900 |
| IMR-3031 | 29.0 | 1211 | 11,400 | 36.0 | 1494 | 17,200 |
| Varget | 30.0 | 1218 | 9,600 | 38.5 | 1515 | 16,500 |

**Note:** Loads shown in shaded panels are maximum.
Loads shown in bold designate potentially most accurate load.

# 416 Rigby

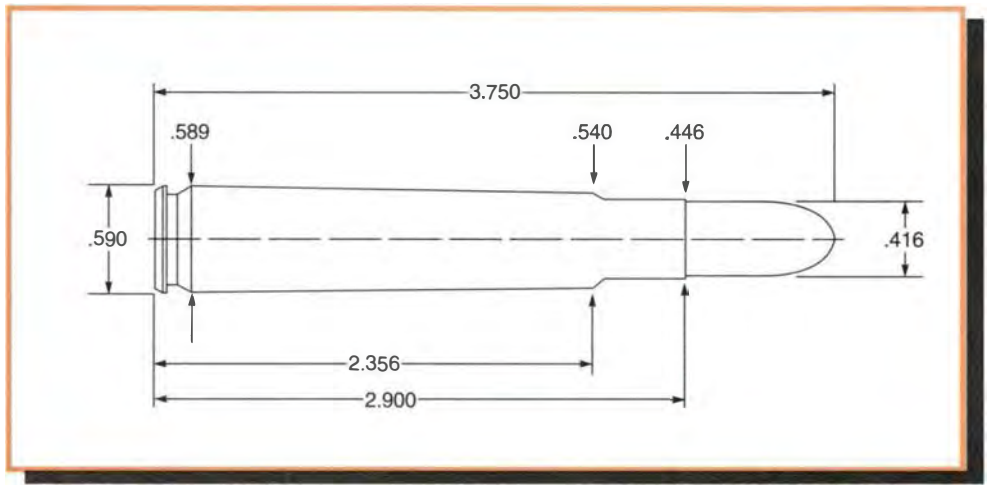


**Comments:**

The 416 Rigby has been a standard African safari cartridge for most of the twentieth century. The Rigby is a non-belted case that operates at fairly low (40,000 CUP) chamber pressure. Its positive feeding and easy case extraction offers piece of mind when the hunter is pursuing large, disagreeable game. This particular 416 also has a reputation for longer case life than belted cases. Many shooters had known of the 416 Rigby only through its formidable reputation for many years. The Rigby's availability had been restricted to expensive custom or double-rifles since its introduction in 1911. The cartridge has seen increased popularity in recent years due to its availability in Ruger's M77 and #1 rifles. IMR-4831 and 7828 are favored powders to fill this huge case. Lighter bullets such as the Barnes "X" can obtain on average two hundred feet per second over the standard 400-grain factory loading. The Rigby case has also served as the parent case for a number of new cartridges over the last several years.

**Test Components:**

Cases . . . . . .Federal
Trim-to Length . . . . . .2.890"
Primers . . . . . .Federal 215
Primer Size . . . . . .Large Rifle, Magnum
Lyman Shell Holder . . . . . .No. 17
Jacketed Bullets Used . . . . .Barnes X #41682, 325 gr.
Barnes Solid RN #41628, 350 gr.
Barnes Solid RN #41660, 400 gr.

**Test Specifications: (Velocity Only)**

Firearm Used . . . . . .Ruger Model 77
Barrel Length . . . . . .23"
Twist . . . . . .1-16½"
Groove Dia. . . . . .415"

**325 gr. Barnes X** — 3.650" OAL — BC: .467 SD: .268

| Powder | Sugg Starting Grains | Velocity fps | Pressure | Max Load Grains | Velocity fps | Pressure |
|---|---|---|---|---|---|---|
| IMR-4350 | 87.0 | 2300 | — | 97.0 | 2586 | — |
| **IMR-4831** | 90.0 | 2179 | — | **100.0** | **2551** | — |
| XMR-3100 | 93.0 | 2234 | — | 103.0 | 2556 | — |
| RX22 | 91.0 | 2305 | — | 101.5 | 2568 | — |
| IMR-7828 | 96.0 | 2313 | — | 102.0 | 2549 | — |

**350 gr. Solid RN** — 3.625" OAL — BC: .364 SD: .289

| Powder | Sugg Starting Grains | Velocity fps | Pressure | Max Load Grains | Velocity fps | Pressure |
|---|---|---|---|---|---|---|
| IMR-4350 | 89.0 | 2268 | — | 95.0 | 2472 | — |
| RX19 | 94.0 | 2334 | — | 100.0 | 2503 | — |
| IMR-4831 | 94.0 | 2287 | — | 100.0 | 2496 | — |
| XMR-3100 | 96.0 | 2284 | — | 102.0 | 2479 | — |
| **RX22** | 95.0 | 2308 | — | **101.0** | **2483** | — |
| IMR-7828 | 96.0 | 2261 | — | 102.5 | 2490 | — |

**400 gr. Solid RN** — 3.625" OAL — BC: .388 SD: .330

| Powder | Sugg Starting Grains | Velocity fps | Pressure | Max Load Grains | Velocity fps | Pressure |
|---|---|---|---|---|---|---|
| IMR-4350 | 88.0 | 2201 | — | 94.0 | 2396 | — |
| RX19 | 91.0 | 2241 | — | 96.5 | 2386 | — |
| **IMR-4831** | 93.0 | 2263 | — | **98.5** | **2370** | — |
| XMR-3100 | 95.0 | 2233 | — | 101.5 | 2390 | — |
| RX22 | 93.0 | 2275 | — | 99.0 | 2394 | — |
| IMR-7828 | 98.0 | 2295 | — | 104.0 | 2410 | — |

**Note:** Loads shown in shaded panels are maximum.
Loads shown in bold designate potentially most accurate load.

# 416 Weatherby Magnum

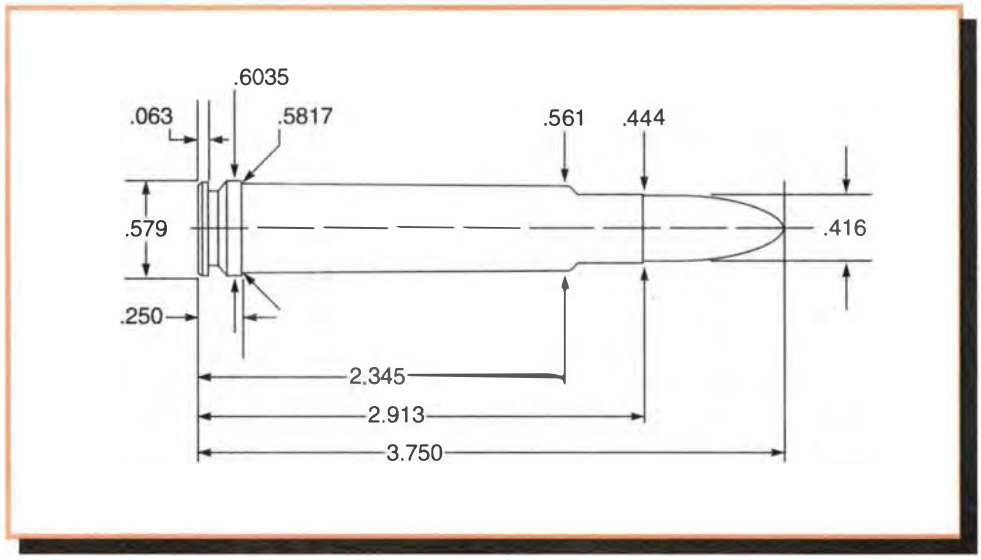


**Comments:**

This case is the 416 Rigby with a belt added and loaded to substantially higher pressure. The much higher chamber pressures result in almost 300 feet per second additional velocity with the 400 grain bullet compared to the 2400 feet per second velocity of factory 416 Rigby ammo. Recoil may exceed most shooters' ability. Of course the 416 Weatherby can easily be loaded down to Rigby ballistics which makes it a manageable round.

The slowest burning powders are ideal. For Rigby level ballistics IMR 4831 seems best. For full power loads, IMR 7828 is the wisest selection, though all the listed propellants are quite satisfactory. This is enough cartridge to make almost anyone believe in muzzle brakes. Even then full power loads are nothing for the timid shooter. Such loads would undoubtedly give an advantage when hunting elephant as compared to the Remington or Rigby 416's, but for almost any other purpose they might be overly potent.

**Test Components:**

Cases . . . . . .Weatherby
Trim-to Length . . . . . .2.903"
Primers . . . . . .Federal 215
Primer Size . . . . . .Large Rifle, Magnum
Lyman Shell Holder . . . . . .No. 17
Jacketed Bullets Used . . . . .Barnes X #41682, 325 gr.
Barnes Solid RN #41628, 350 gr.
Barnes Solid RN #41660, 400 gr.

**Test Specifications: (Velocity Only)**

Firearm Used . . . . . .Weatherby Mk V
Barrel Length . . . . . .24"
Twist . . . . . .1-14"
Groove Dia. . . . . .416"

**325 gr. Barnes X** — 3.700" OAL — **BC:** .467 **SD:** .268

| Powder | Sugg Starting Grains | Velocity fps | Pressure C.U.P. | Max Load Grains | Velocity fps | Pressure C.U.P. |
|---|---|---|---|---|---|---|
| IMR-4350 | 102.0 | 2627 | — | 113.0+ | 2914 | — |
| RX19 | 108.0 | 2613 | — | 120.0+ | 2902 | — |
| IMR-4831 | 105.0 | 2603 | — | 117.0+ | 2877 | — |
| AA 3100 | 107.0 | 2551 | — | 119.0+ | 2767 | — |
| RX22 | 111.0 | 2586 | — | 124.0+ | 2887 | — |
| **IMR-7828** | 110.0 | 2536 | — | **122.0+** | **2819** | — |

**350 gr. Solid RN** — 3.640" OAL — **BC:** .364 **SD:** .289

| Powder | Sugg Starting Grains | Velocity fps | Pressure C.U.P. | Max Load Grains | Velocity fps | Pressure C.U.P. |
|---|---|---|---|---|---|---|
| IMR-4350 | 98.0 | 2464 | — | 109.0+ | 2783 | — |
| RX19 | 106.0 | 2533 | — | 118.0+ | 2822 | — |
| IMR-4831 | 102.0 | 2460 | — | 114.0+ | 2766 | — |
| AA3100 | 106.0 | 2469 | — | 118.0+ | 2687 | — |
| RX22 | 109.0 | 2477 | — | 121.0+ | 2756 | — |
| **IMR-7828** | 107.0 | 2445 | — | **119.0+** | **2727** | — |

**400 gr. Solid RN** — 3.750" OAL — **BC:** .388 **SD:** .330

| Powder | Sugg Starting Grains | Velocity fps | Pressure C.U.P. | Max Load Grains | Velocity fps | Pressure C.U.P. |
|---|---|---|---|---|---|---|
| IMR-4350 | 94.0 | 2261 | — | 104.0+ | 2609 | — |
| RX19 | 101.0 | 2307 | — | 108.0+ | 2650 | — |
| **IMR-4831** | 100.0 | 2309 | — | **110.0+** | **2648** | — |
| RX22 | 104.0 | 2286 | — | 112.0+ | 2643 | — |
| IMR-7828 | 104.0 | 2290 | — | 116.0+ | 2635 | — |

**Note:** Loads shown in shaded panels are maximum.
Loads shown in bold designate potentially most accurate load.
+ Designates a compressed powder charge.

# 416 Remington Magnum

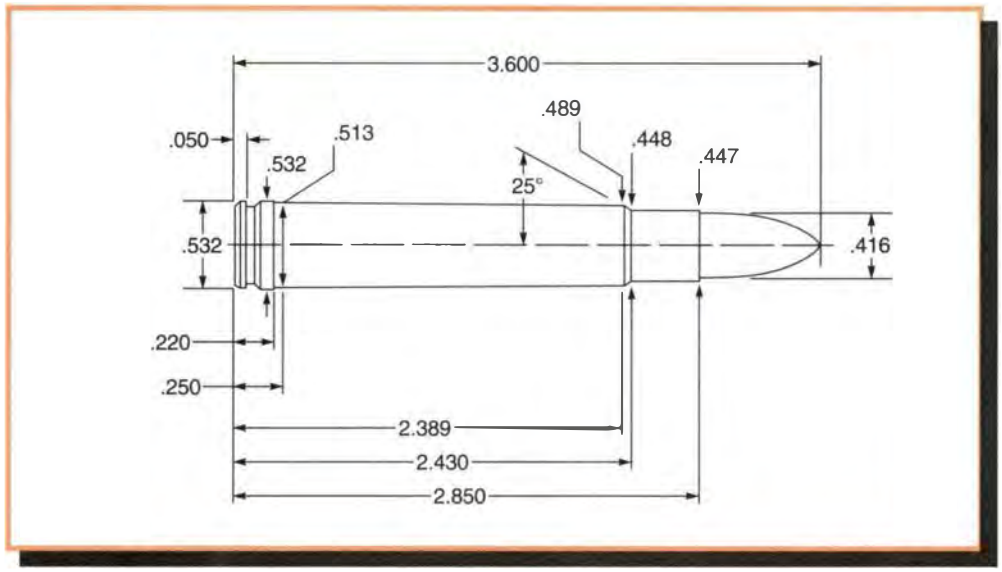


**Comments:**

This cartridge is a necked up 8mm Remington Magnum. It is ideal for big game applications from brown bear to elephant.

The 416 Remington Magnum is not much different from the wildcat 416 Hoffman. It offers all the power of the 416 Rigby (albeit at higher chamber pressure) and the advantage of more shells in the magazine because of its narrower case diameter.

The 400 grain bullet offers the most punch, but lighter bullets better fit the needs of most North American hunting. Hercules Reloder 15 is the single best propellant and 1" groups are possible with it and the 400 grain bullets.

**Test Components:**

Cases . . . . . .Remington
Trim-to Length . . . . . .2.840"
Primers . . . . . .Remington 9½ M
Primer Size . . . . . .Large Rifle, Magnum
Lyman Shell Holder . . . . . .No. 13
Jacketed Bullets Used . . . . .Barnes X #41682, 325 gr.
Barnes Solid RN #41628, 350 gr.
Barnes Solid RN #41660, 400 gr.

**Test Specifications:**
**(Velocity & Pressure)**

Firearm Used . . . . . .Universal Receiver
Barrel Length . . . . . .24"
Twist . . . . . .1-14"
Groove Dia. . . . . .4165"

**325 gr. Barnes X**
3.600" OAL
**BC:** .467
**SD:** .268

| Powder | Sugg Starting Grains | Velocity fps | Pressure C.U.P. | Max Load Grains | Velocity fps | Pressure C.U.P. |
|---|---|---|---|---|---|---|
| XMR-2015 | 68.0 | 2345 | 42,900 | 76.0 | 2547 | 52,700 |
| IMR-3031 | 74.5 | 2466 | 40,300 | 83.0+ | 2708 | 53,100 |
| IMR-4895 | 75.5 | 2450 | 39,700 | 84.4+ | 2699 | 53,100 |
| IMR-4064 | 77.0 | 2426 | 38,200 | 85.7+ | 2702 | 51,500 |
| **Varget** | 77.0 | 2445 | 37,400 | **86.0+** | **2703** | **51,100** |
| IMR-4320 | 76.0 | 2428 | 39,800 | 84.2+ | 2651 | 51,400 |
| RX15 | 80.5 | 2552 | 42,200 | 88.5+ | 2753 | 52,300 |
| N140 | 78.0 | 2448 | 40,400 | 87.0+ | 2696 | 50,600 |
| H-380 | 81.0 | 2389 | 38,300 | 91.0+ | 2644 | 48,500 |

**350 gr. Solid RN**
3.590" OAL
**BC:** .364
**SD:** .289

| Powder | Sugg Starting Grains | Velocity fps | Pressure C.U.P. | Max Load Grains | Velocity fps | Pressure C.U.P. |
|---|---|---|---|---|---|---|
| XMR-2015 | 65.0 | 2171 | 37,700 | 72.0 | 2403 | 49,800 |
| IMR-3031 | 74.0 | 2389 | 41,200 | 82.5+ | 2608 | 52,300 |
| IMR-4895 | 75.0 | 2370 | 41,300 | 84.2+ | 2610 | 52,800 |
| IMR-4064 | 76.5 | 2364 | 39,700 | 85.5+ | 2613 | 52,400 |
| Varget | 76.0 | 2371 | 38,200 | 84.0+ | 2587 | 48,100 |
| IMR-4320 | 75.0 | 2341 | 40,300 | 84.0+ | 2565 | 49,900 |
| RX15 | 79.0 | 2442 | 41,800 | 88.0+ | 2668 | 52,500 |
| **N140** | 76.0 | 2339 | 38,100 | **84.0+** | **2577** | **49,500** |
| H-380 | 81.0 | 2329 | 39,800 | 91.0+ | 2567 | 48,700 |

**400 gr. Solid RN**
3.590" OAL
**BC:** .388
**SD:** .330

| Powder | Sugg Starting Grains | Velocity fps | Pressure C.U.P. | Max Load Grains | Velocity fps | Pressure C.U.P. |
|---|---|---|---|---|---|---|
| IMR-3031 | 67.5 | 2149 | 40,700 | 75.2+ | 2353 | 52,500 |
| IMR-4895 | 69.0 | 2151 | 40,000 | 77.3+ | 2376 | 52,900 |
| IMR-4064 | 71.0 | 2156 | 39,800 | 78.8+ | 2385 | 52,000 |
| Varget | 70.0 | 2131 | 37,700 | 77.0+ | 2359 | 49,400 |
| IMR-4320 | 70.0 | 2106 | 39,000 | 77.2+ | 2320 | 50,800 |
| RX15 | 71.5 | 2155 | 38,000 | 80.0+ | 2415 | 51,600 |
| **N140** | 70.0 | 2112 | 37,700 | **78.0+** | **2327** | **48,400** |
| AA2700 | 78.0 | 2103 | 32,400 | 86.0+ | 2325 | 42,500 |
| H-380 | 78.0 | 2200 | 42,200 | 87.0+ | 2403 | 50,400 |

**Note:** Loads shown in shaded panels are maximum.
Loads shown in bold designate potentially most accurate load.
\+ Designates a compressed powder charge.

# 44-40 Winchester (44 WCF)

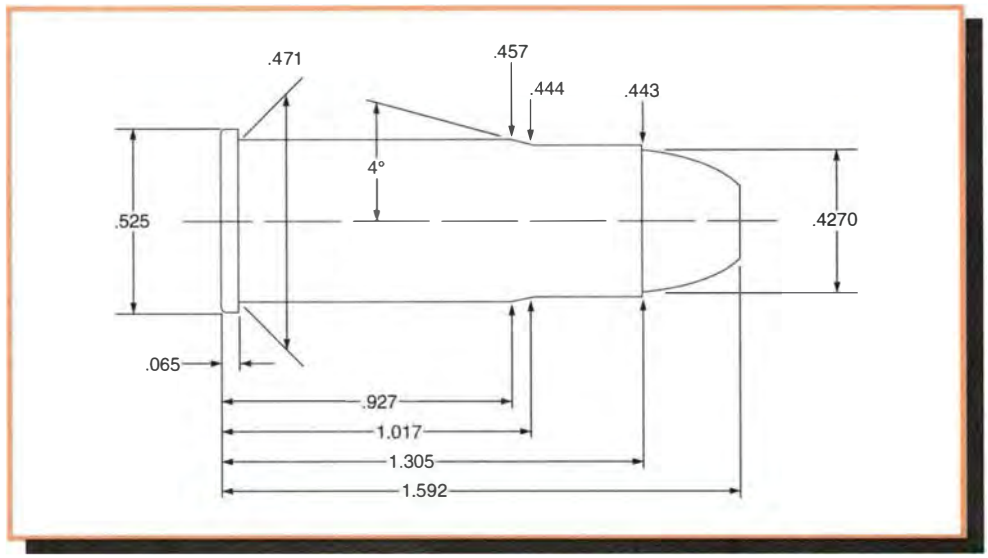


## Comments:

These loads should not be used in handguns or in rifles that were designed for black powder.

Individual tolerances vary greatly in rifles chambered for this cartridge. Therefore, extreme care should be used in working up maximum loads. CAUTION: THE RELATIVE STRENGTH OF 44/ 40 FIREARMS VARIES GREATLY WITH ACTION DESIGN AND DATE OF MANUFACTURE. As a reference we have categorized actions into two groups:

**GROUP 1 (Weaker Actions)**

Winchester Model 1873 Lever Action
Whitney-Kennedy Lever Action
Colt-Burgess Lever Action
Marlin Model 1888 Lever Action
Colt "Lightning" Slide Action
Euroarms Replica 1873 Lever Action
Navy Arms Replica 1873 Lever Action
Remington No. 2 Rolling-Block S.S.
Ballard No. 2 Single Shot
Stevens Model 44 Single Shot

**GROUP 2 (Strong Actions)**

Winchester Model 1892 Lever Action
Marlin Model 1889 Lever Action
Marlin Model 1894 Lever Action
Remington-Keene Bolt Action
Remington Model 14 1/2 Slide Action
Winchester Single Shot Rifles
Remington No. 1 Rolling Block
S.S.Remington "Baby Carbine" S.S.
Stevens Model 44 1/2 Single Shot

For Group 1 we recommend not to exceed 13,700 CUP maximum pressure and for Group 2 not to exceed 22,000 CUP maximum pressure. Our data is divided up into loads for each category. In all cases use caution in working up to maximum loads.

Cases should be examined to determine if they are of the old balloon head construction. These cases should be considered unsafe for smokeless powder loads. Due to variations in groove diameters, it is recommended that you slug your barrel before reloading.

## Test Components:

Cases . . . . . .Winchester
Trim-to Length . . . . . .1.295"
Primers . . . . . .Winchester WLP
Primer Size . . . . . .Large Pistol
Lyman Shell Holder . . . . . .No. 14B
Jacketed Bullets Used . . . . .Speer JHP # 4425, 200 gr.
Cast Bullets Used . . . . . .(sized to .429" dia)
#427666, 200 gr.
#427098, 205 gr.

## Test Specifications: (Velocity & Pressure)

Firearm Used . . . . . .Universal Receiver
Navy Arms 1873 Carbine
Barrel Length . . . . . .Universal Receiver; 24"
1873 Carbine; 19"
Twist . . . . . .Universal Receiver; 1-36"
1873 Carbine; 1-20"
Groove Dia. . . . . .Universal Receiver; .429"
1873 Carbine; .427"

**200 gr. Jacketed HP**
1.600" OAL
**BC:** .122
**SD:** .155

**Group 1**

| Powder | Sugg Starting Grains | Velocity fps | Pressure C.U.P. | Max Load Grains | Velocity fps | Pressure C.U.P. |
|---|---|---|---|---|---|---|
| Unique | 7.6 | 865 | 10,600 | 8.5 | 981 | 13,300 |
| 2400 | 14.4 | 980 | 6,600 | 16.0 | 1183 | 11,900 |
| **IMR-4227** | **16.5** | **895** | **4,800** | 18.5 | 1212 | 11,600 |

**Group 2**

| Powder | Sugg Starting Grains | Velocity fps | Pressure C.U.P. | Max Load Grains | Velocity fps | Pressure C.U.P. |
|---|---|---|---|---|---|---|
| Unique | 8.5 | 981 | 13,300 | 10.2 | 1282 | 19,600 |
| 2400 | 18.0 | 1380 | 14,600 | 20.0 | 1638 | 19,000 |
| IMR-4227 | 18.5 | 1212 | 11,600 | 20.5 | 1455 | 19,600 |

**Note:** Loads shown in shaded panels are maximum.
Loads shown in bold designate potentially most accurate load.

# 44-40 Winchester (44 WCF)

**#427666**
200 gr. (#2 Alloy) 1.580" OAL
**BC:** .149
**SD:** .155

| Group 1 Powder | Sugg Starting Grains | Velocity fps | Pressure C.U.P. | Max Load Grains | Velocity fps | Pressure C.U.P. |
|---|---|---|---|---|---|---|
| Bullseye | 5.6 | 989 | 7,700 | 7.0 | 1165 | 12,600 |
| 700X | 5.1 | 993 | 7,400 | 6.4 | 1119 | 12,600 |
| AA#2 | 6.0 | 994 | 7,400 | 6.5 | 1154 | 12,800 |
| Unique | 6.9 | 1056 | 6,700 | 8.6 | 1226 | 12,600 |
| **SR-4756** | **7.5** | **904** | **5,900** | 9.4 | 1086 | 12,300 |
| 2400 | 13.2 | 1035 | 7,900 | 16.5 | 1232 | 12,800 |
| IMR-4227 | 15.0 | 933 | 7,700 | 17.0 | 1310 | 12,600 |

**#427098**
205 gr. (#2 Alloy) 1.592" OAL
**BC:** .103
**SD:** .159

| Group 1 Powder | Sugg Starting Grains | Velocity fps | Pressure C.U.P. | Max Load Grains | Velocity fps | Pressure C.U.P. |
|---|---|---|---|---|---|---|
| Bullseye | 5.2 | 952 | — | 6.5 | 1099 | — |
| Red Dot | 5.5 | 980 | 7,500 | 6.5 | 1125 | 13,600 |
| 700X | 4.8 | 921 | — | 6.0 | 1086 | — |
| Green Dot | 7.0 | 1059 | 8,700 | 8.0 | 1194 | 12,900 |
| AA#2 | 5.4 | 871 | — | 6.3 | 1060 | — |
| Unique | 6.3 | 895 | — | 7.9 | 1127 | — |
| **SR-4756** | **7.4** | **848** | — | 9.3 | 1050 | — |
| 2400 | 12.0 | 885 | — | 15.0 | 1088 | — |
| IMR-4227 | 12.6 | 685 | — | 17.0 | 1083 | — |

| Group 2 Powder | Sugg Starting Grains | Velocity fps | Pressure C.U.P. | Max Load Grains | Velocity fps | Pressure C.U.P. |
|---|---|---|---|---|---|---|
| Red Dot | 7.0 | 1180 | 17,200 | 8.0 | 1290 | 21,900 |
| Green Dot | 8.0 | 1194 | 12,900 | 9.0 | 1340 | 19,300 |
| Unique | 9.5 | 1319 | 15,200 | 10.5 | 1410 | 19,700 |

**Note:** Loads shown in shaded panels are maximum.
Loads shown in bold designate potentially most accurate load.

# 44 Remington Magnum (Rifle Data)

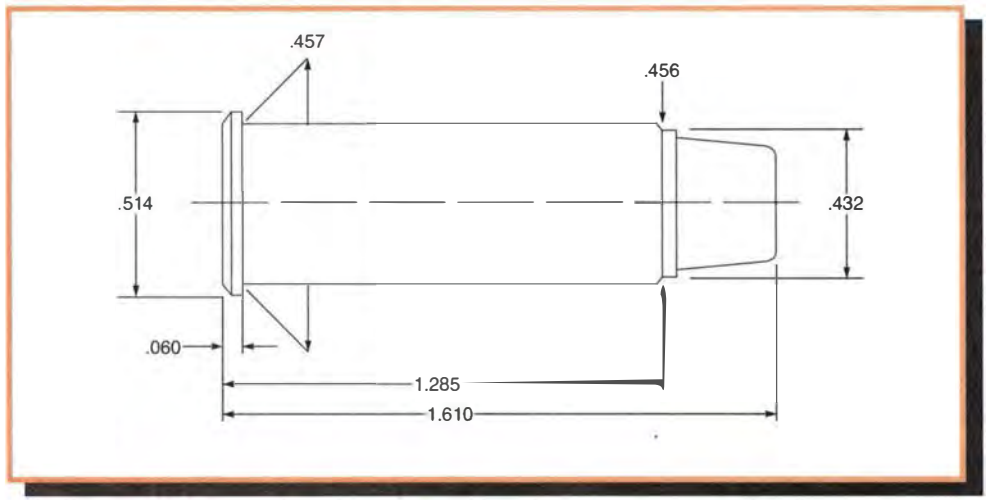


**Comments:**

Pressure limits for this cartridge are the same in rifles or handguns. High primers are an extraordinary danger in semi-automatic rifles. Be extra careful. Cast bullets tend to foul the gas piston in these same firearms and hence are not recommended for use in the semi-autos.

In rifles with shallow multi-groove rifling cast bullet velocity must be held to 1,600 fps. or less. The use of hard alloys and maximum sizing diameters will also help accuracy in these rifles.

Use the exact listed overall length to get correct seating depth with cast bullets. Bullet #429640 may not feed from the magazine in some Marlin rifles.

Use only flat nosed bullets in tubular magazines.

**Test Components:**

Cases . . . . . .Remington
Trim-to Length . . . . . .1.275"
Primers . . . . . .CCI 300 & 350
Primer Size . . . . . .Large Pistol, Std. & Magnum
Lyman Shell Holder . . . . . .No. 7
Jacketed Bullets Used . . . . . .
Hornady HP/XTP #44100, 200 gr.
Speer JHP #4435, 225 gr.
Speer JHP #4453, 240 gr.
Hornady SP #4300, 265 gr.
Cast Bullets Used . . . . . .(sized to .429" dia)
*gas check bullet *#429215, 210 gr.
#429667, 240 gr.

**Test Specifications: (Velocity Only)**

Firearm Used . . . . . .Winchester Model 94AE
Barrel Length . . . . . .20"
Twist . . . . . .1-26"
Groove Dia. . . . . .429"

**200 gr. Jacketed HP/XTP** — 1.610" OAL — BC: .170 SD: .155

| Powder | Sugg Starting Grains | Velocity fps | Pressure | Max Load Grains | Velocity fps | Pressure |
|---|---|---|---|---|---|---|
| AA#7 | 18.2 | 1695 | — | 20.2 | 1836 | — |
| **2400** | **19.5** | **1603** | — | 23.6 | 1880 | — |
| *H110 | 27.7 | 2049 | — | 28.8+ | 2133 | — |
| *296 | 27.0 | 2066 | — | 28.3+ | 2129 | — |
| *H-4227 | 23.8 | 1715 | — | 26.5+ | 1870 | — |

**225 gr. Jacketed HP** — 1.610" OAL — BC: .146 SD: .175

| Powder | Sugg Starting Grains | Velocity fps | Pressure | Max Load Grains | Velocity fps | Pressure |
|---|---|---|---|---|---|---|
| Unique | 10.8 | 1349 | — | 12.0 | 1475 | — |
| Blue Dot | 14.1 | 1420 | — | 15.7 | 1570 | — |
| 2400 | 19.8 | 1581 | — | 22.0 | 1753 | — |
| **N110** | 19.0 | 1578 | — | **21.1** | **1717** | — |
| *H110 | 25.0 | 1834 | — | 26.0 | 1871 | — |
| *296 | 24.0 | 1724 | — | 25.0 | 1822 | — |
| *H-4227 | 22.5 | 1574 | — | 25.0 | 1750 | — |

**Note:** Loads shown in shaded panels are maximum.
Loads shown in bold designate potentially most accurate load.
* Designates the use of magnum primers.
\+ Designates a compressed powder charge.

# 44 Remington Magnum (Rifle Data)

**240 gr. Jacketed HP**
1.610" OAL
**BC:** .165
**SD:** .186

| Powder | Sugg Starting Grains | Velocity fps | Pressure | Max Load Grains | Velocity fps | Pressure |
|---|---|---|---|---|---|---|
| Unique | 10.8 | 1310 | — | 12.0 | 1445 | — |
| Blue Dot | 14.4 | 1457 | — | 16.0 | 1558 | — |
| 2400 | 18.4 | 1479 | — | 20.5 | 1602 | — |
| N110 | 18.7 | 1555 | — | 20.8 | 1671 | — |
| ***H110** | 23.5 | 1690 | — | **24.5** | **1745** | — |
| *296 | 23.0 | 1654 | — | 24.0 | 1704 | — |
| *H-4227 | 21.8 | 1504 | — | 24.2 | 1671 | — |

**265 gr. Jacketed SP**
1.610" OAL
**BC:** .189
**SD:** .205

| Powder | Sugg Starting Grains | Velocity fps | Pressure | Max Load Grains | Velocity fps | Pressure |
|---|---|---|---|---|---|---|
| Blue Dot | 12.6 | 1253 | — | 14.0 | 1425 | — |
| 2400 | 16.5 | 1318 | — | 18.3 | 1475 | — |
| N110 | 16.6 | 1394 | — | 18.5 | 1523 | — |
| *H110 | 20.6 | 1576 | — | 21.5 | 1623 | — |
| ***296** | 21.0 | 1583 | — | **22.0** | **1652** | — |
| *H-4227 | 19.3 | 1397 | — | 21.5 | 1538 | — |

**#429215**
210 gr. (#2 Alloy) 1.645" OAL
**BC:** .188
**SD:** .163

| Powder | Sugg Starting Grains | Velocity fps | Pressure | Max Load Grains | Velocity fps | Pressure |
|---|---|---|---|---|---|---|
| Titegroup | 9.0 | 1408 | — | 10.0 | 1490 | — |
| HS-6 | 15.0 | 1621 | — | 16.7 | 1733 | — |
| AA#7 | 17.2 | 1627 | — | 19.2 | 1805 | — |
| Blue Dot | 14.9 | 1588 | — | 16.6 | 1722 | — |
| 2400 | 19.8 | 1550 | — | 22.0 | 1705 | — |
| N110 | 19.3 | 1683 | — | 21.5 | 1821 | — |
| *H110 | 26.4 | 1929 | — | 27.5 | 1985 | — |
| ***296** | **25.9** | **1887** | — | 27.0 | 1933 | — |

**#429667**
240 gr. (#2 Alloy) 1.645" OAL
**BC:** .149
**SD:** .186

| Powder | Sugg Starting Grains | Velocity fps | Pressure | Max Load Grains | Velocity fps | Pressure |
|---|---|---|---|---|---|---|
| Titegroup | 9.0 | 1356 | — | 10.0 | 1443 | — |
| Unique | 10.0 | 1332 | — | 11.7 | 1482 | — |
| Herco | 10.5 | 1362 | — | 11.7 | 1450 | — |
| 800X | 12.1 | 1477 | — | 13.5 | 1597 | — |
| Blue Dot | 13.9 | 1447 | — | 15.5 | 1589 | — |
| AA#9 | 18.2 | 1560 | — | 20.2 | 1710 | — |
| 2400 | 18.5 | 1574 | — | 20.6 | 1686 | — |
| N110 | 18.0 | 1578 | — | 20.0 | 1695 | — |
| *H110 | 22.5 | 1709 | — | 23.5 | 1765 | — |
| **IMR-4227** | **21.6** | **1504** | — | 24.0 | 1654 | — |

**Note:** Loads shown in shaded panels are maximum.
Loads shown in bold designate potentially most accurate load.
* Designates the use of magnum primers.

# 444 Marlin

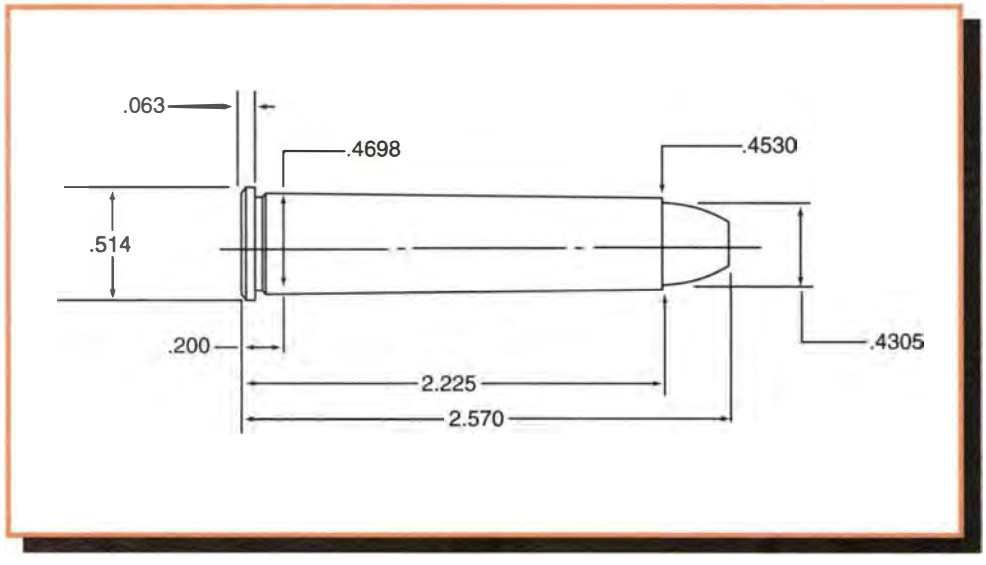


**Comments:**

The 444 Marlin has earned a reputation as a hard-hitting, short-range brush cartridge since its introduction in 1964. Some think of the "Triple-four" as simply a 44 Magnum stretched .940" to 2.225" case length. The performance — and appearance of the 444 is similar to the various 40-caliber black powder cartridges so prominent in the latter nineteenth and early twentieth century. The 225-grain bullet is best for plinking or off-season target practice. Hornady's 265-grain Flat-Point is constructed especially to feed and perform in the big Marlin. Many of the jacketed bullets loads are heavily compressed. Best results in loading may require seating and crimping in two separate operations. Those shooters loading cast bullets for Marlin rifles with Micro-Groove® rifling should keep velocities below 1,600 feet per second for best accuracy. A hard bullet alloy of at least 15 bhn will also help.

The 18-inch ported barrel of the Winchester Timber Carbine used in our tests yielded a dramatic difference in velocity compared to other published data. This difference is often upwards of two to three hundred feet per second. Most other sources of data for the 444 Marlin utilize unported 24-inch test barrels. Reloder 7 and IMR-4198 with jacketed bullets have worked well in the Marlin over the years.

**Test Components:**

Cases . . . . . .Remington
Trim-to Length . . . . . .2.215"
Primers . . . . . .Remington 9½
Primer Size . . . . . .Large Rifle
Lyman Shell Holder . . . . . .No. 14B
Jacketed Bullets Used . . . . .Speer JHP #4435, 225 gr.
Speer JHP #4453, 240 gr.
Hornady SP #4300, 265 gr.
Hornady HP/XTC #44280, 300 gr.
Cast Bullets Used . . . . . .(sized to .431" dia)
*gas check bullet *#429215, 210 gr.
#429667, 240 gr.

**Test Specifications:**
**(Velocity Only)**

Firearm Used . . .Winchester Model 94 Timber Carbine
Barrel Length . . . . . .18"
Twist . . . . . .1-38"
Groove Dia. . . . . .431"

**225 gr. Jacketed HP** — 2.550" OAL — **BC:** .146 **SD:** .175

| Powder | Sugg Starting Grains | Velocity fps | Pressure | Max Load Grains | Velocity fps | Pressure |
|---|---|---|---|---|---|---|
| XMP-5744 | 36.0 | 1729 | — | 38.5 | 1848 | — |
| N120 | 46.0 | 2184 | — | 51.0 | 2303 | — |
| IMR-4198 | 41.0 | 1871 | — | 45.5 | 2124 | — |
| H-4198 | 42.0 | 1702 | — | 46.5 | 2001 | — |
| RX7 | 47.0 | 1883 | — | 52.0 | 2100 | — |
| IMR-3031 | 49.5 | 1751 | — | 55.0+ | 2027 | — |
| **IMR-4895** | 51.5 | 1767 | — | **57.0+** | **1995** | — |

**240 gr. Jacketed HP** — 2.505" OAL — **BC:** .165 **SD:** .186

| Powder | Sugg Starting Grains | Velocity fps | Pressure | Max Load Grains | Velocity fps | Pressure |
|---|---|---|---|---|---|---|
| XMP-5744 | 33.0 | 1624 | — | 37.0 | 1812 | — |
| N130 | 48.0 | 1954 | — | 53.0+ | 2278 | — |
| **IMR-4198** | 42.0 | 1944 | — | **47.0** | **2212** | — |
| H-4198 | 44.0 | 1841 | — | 49.0 | 2184 | — |
| RX7 | 46.0 | 1901 | — | 51.0+ | 2162 | — |
| IMR-3031 | 49.5 | 1796 | — | 55.0+ | 2028 | — |
| AA2230 | 50.0 | 1881 | — | 55.5 | 1961 | — |
| IMR-4895 | 51.0 | 1799 | — | 57.0+ | 2016 | — |

**Note:** Loads shown in shaded panels are maximum.
Loads shown in bold designate potentially most accurate load.
\+ Designates a compressed powder charge.

**265 gr. Jacketed SP**
2.560" OAL
**BC:** .189
**SD:** .205

| Powder | Sugg Starting Grains | Velocity fps | Pressure | Max Load Grains | Velocity fps | Pressure |
|---|---|---|---|---|---|---|
| XMP-5744 | 31.5 | 1516 | — | 35.0 | 1683 | — |
| N130 | 46.0 | 1879 | — | 51.0+ | 2169 | — |
| **IMR-4198** | 40.0 | 1799 | — | **44.5** | **2077** | — |
| H-4198 | 42.0 | 1803 | — | 47.0 | 2118 | — |
| RX7 | 42.0 | 1691 | — | 47.0 | 1934 | — |
| AA2230 | 47.0 | 1769 | — | 52.5 | 1854 | — |
| IMR-4895 | 48.0 | 1633 | — | 53.0 | 1873 | — |

**300 gr. Jacketed HP/XTP**
2.570" OAL
**BC:** .245
**SD:** .232

| Powder | Sugg Starting Grains | Velocity fps | Pressure | Max Load Grains | Velocity fps | Pressure |
|---|---|---|---|---|---|---|
| XMP-5744 | 33.0 | 1551 | — | 36.5 | 1737 | — |
| IMR-4198 | 35.0 | 1602 | — | 39.0 | 1798 | — |
| H-4198 | 37.0 | 1579 | — | 41.5 | 1777 | — |
| RX7 | 39.5 | 1614 | — | 44.0 | 1834 | — |
| **IMR-4895** | 47.0 | 1657 | — | **52.0** | **1838** | — |

**#429215**
210 gr. (#2 Alloy) 2.570" OAL
**BC:** .188
**SD:** .161

| Powder | Sugg Starting Grains | Velocity fps | Pressure | Max Load Grains | Velocity fps | Pressure |
|---|---|---|---|---|---|---|
| SR-4759 | 26.0 | 1546 | — | 29.0 | 1752 | — |
| XMP-5744 | 30.5 | 1569 | — | 34.0 | 1698 | — |
| IMR-4198 | 31.5 | 1345 | — | 35.0 | 1587 | — |
| RX7 | 39.0 | 1185 | — | 43.0 | 1513 | — |
| **IMR-3031** | **40.0** | **1273** | — | 44.0 | 1473 | — |

**#429667**
240 gr. (#2 Alloy) 2.570" OAL
**BC:** .149
**SD:** .185

| Powder | Sugg Starting Grains | Velocity fps | Pressure | Max Load Grains | Velocity fps | Pressure |
|---|---|---|---|---|---|---|
| SR-4759 | 25.0 | 1596 | — | 28.0 | 1769 | — |
| XMP-5744 | 29.0 | 1516 | — | 32.0 | 1634 | — |
| **IMR-4198** | **32.5** | **1524** | — | 36.0 | 1684 | — |
| RX7 | 37.0 | 1494 | — | 41.0 | 1611 | — |
| IMR-3031 | 40.5 | 1419 | — | 45.0 | 1596 | — |

**Note:** Loads shown in shaded panels are maximum.
Loads shown in bold designate potentially most accurate load.
\+ Designates a compressed powder charge.

# 45 Colt (Rifle Data)

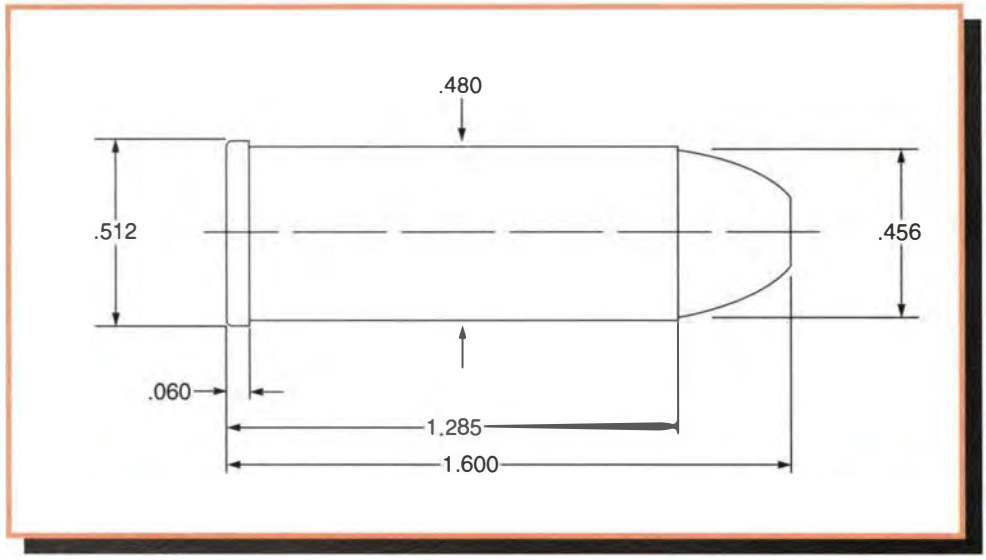


**Comments:**

While this cartridge has been chambered in revolvers since its inception, it's only recently been offered in lever action rifles. Shooters should be cautious when resizing this particular cartridge. The unusually small rim is prone to tearing off thus leaving the case stuck in the die. Powders favored for 45 Colt pistol loads will also work with the rifle although the longer 16-inch barrel may work better with slower burning powders such as 2400. Some Lyman customers ask if the 45 Colt can be loaded to the higher pressures of the 44 Remington Magnum.

The 44 Magnum case is built to withstand the 40,000 CUP pressure level,...substantially more than the original loading for the Colt back in 1873. Those requiring 44 Magnum level performance should trade their rifle in for one chambered in 44 Magnum. A Model 94 in 45 Colt will otherwise be adequate as a short-range brush gun with the 250-grain XTP on deer sized game with proper shot placement. Cast bullet #452664 is our Cowboy Action Shooting bullet and produced excellent accuracy in the test rifle.

**Test Components:**

Cases . . . . . .Winchester
Trim-to Length . . . . . .1.275"
Primers . . . . . .Winchester WLP
Primer Size . . . . . .Large Pistol
Lyman Shell Holder . . . . . .No. 11
Jacketed Bullets Used . . . . .Sierra JHP #8800, 185 gr.
Speer JHP #4479, 225 gr.
Sierra JHC #8820, 240 gr.
Hornady HP/XTC #45200, 250 gr.
Cast Bullets Used . . . . . .(sized to .452" dia)
#454190, 250 gr.
#452664, 250 gr.
#452424, 255 gr.

**Test Specifications: (Velocity Only)**

Firearm Used . . . . . .Winchester Model 94AE
Barrel Length . . . . . .16"
Twist . . . . . .1-38"
Groove Dia. . . . . .451"

**185 gr. Jacketed HP** — 1.520" OAL — BC: .100 SD: .130

| Powder | Sugg Starting Grains | Velocity fps | Pressure | Max Load Grains | Velocity fps | Pressure |
|---|---|---|---|---|---|---|
| 700X | 6.0 | 946 | — | 7.0 | 1108 | — |
| N320 | 8.3 | 1102 | — | 9.3 | 1289 | — |
| 231 | 7.6 | 1021 | — | 8.5 | 1111 | — |
| AA#5 | 13.0 | 1416 | — | 13.7 | 1493 | — |
| Unique | 7.5 | 944 | — | 10.0 | 1263 | — |
| HS-7 | 13.0 | 1121 | — | 14.5 | 1238 | — |
| Blue Dot | 12.0 | 979 | — | 13.5 | 1116 | — |
| IMR-4227 | 16.5 | 843 | — | 20.0 | 1145 | — |
| **XMP-5744** | 18.5 | 1099 | — | **20.5** | **1194** | — |

**225 gr. Jacketed HP** — 1.557" OAL — BC: .169 SD: .158

| Powder | Sugg Starting Grains | Velocity fps | Pressure | Max Load Grains | Velocity fps | Pressure |
|---|---|---|---|---|---|---|
| N320 | 7.2 | 900 | — | 8.0 | 1031 | — |
| 231 | 7.4 | 889 | — | 8.3 | 1047 | — |
| AA#5 | 11.2 | 1170 | — | 11.8 | 1258 | — |
| Unique | 8.3 | 1049 | — | 10.8 | 1291 | — |
| **Power Pistol** | 8.5 | 1035 | — | **9.5** | **1158** | — |
| SR-7625 | 7.0 | 741 | — | 9.3 | 1151 | — |
| N340 | 9.1 | 1041 | — | 10.2 | 1194 | — |
| HS-6 | 11.6 | 1096 | — | 13.6 | 1265 | — |
| Blue Dot | 12.4 | 1076 | — | 15.4 | 1310 | — |
| IMR-4227 | 16.5 | 953 | — | 21.0 | 1265 | — |

**Note:** Loads shown in shaded panels are maximum.
Loads shown in bold designate potentially most accurate load.

### 240 gr. Jacketed HC
1.575" OAL

**BC:** .150
**SD:** .168

| Powder | Sugg Starting Grains | Velocity fps | Pressure | Max Load Grains | Velocity fps | Pressure |
|---|---|---|---|---|---|---|
| AA#5 | 10.9 | 1148 | — | 11.5 | 1210 | — |
| Unique | 7.5 | 952 | — | 9.5 | 1176 | — |
| Power Pistol | 8.2 | 1008 | — | 9.2 | 1127 | — |
| N340 | 8.8 | 1012 | — | 9.8 | 1123 | — |
| HS-6 | 10.0 | 906 | — | 11.0 | 1010 | — |
| HS-7 | 12.0 | 1041 | — | 14.0 | 1185 | — |
| 2400 | 15.0 | 973 | — | 18.5 | 1321 | — |
| IMR-4227 | 16.0 | 842 | — | 20.5 | 1215 | — |
| **XMP-5744** | **16.5** | **958** | — | 18.5 | 1054 | — |

### 250 gr. Jacketed HP/XTP
1.590" OAL

**BC:** .146
**SD:** .175

| Powder | Sugg Starting Grains | Velocity fps | Pressure | Max Load Grains | Velocity fps | Pressure |
|---|---|---|---|---|---|---|
| Titegroup | 5.6 | 828 | — | 6.3 | 935 | — |
| 231 | 6.5 | 824 | — | 7.3 | 902 | — |
| AA#5 | 10.9 | 1124 | — | 11.5 | 1217 | — |
| Unique | 7.5 | 878 | — | 9.3 | 1102 | — |
| **Power Pistol** | 8.0 | 987 | — | **9.0** | **1091** | — |
| N340 | 8.6 | 979 | — | 9.6 | 1097 | — |
| 2400 | 15.2 | 1054 | — | 17.5 | 1236 | — |
| IMR-4227 | 17.0 | 949 | — | 20.3 | 1198 | — |
| XMP-5744 | 16.0 | 927 | — | 18.0 | 1030 | — |

### #454190
250 gr. (#2 Alloy) 1.600" OAL

**BC:** .269
**SD:** .175

| Powder | Sugg Starting Grains | Velocity fps | Pressure | Max Load Grains | Velocity fps | Pressure |
|---|---|---|---|---|---|---|
| Red Dot | 4.5 | 763 | — | 6.5 | 1002 | — |
| **700X** | 4.5 | 816 | — | **6.0** | **992** | — |
| Titegroup | 5.6 | 933 | — | 6.2 | 1004 | — |
| N320 | 5.9 | 769 | — | 6.8 | 932 | — |
| 231 | 6.5 | 967 | — | 7.4 | 1069 | — |
| Unique | 6.0 | 809 | — | 90 | 1157 | — |
| AA#5 | 10.5 | 1160 | — | 11.0 | 1237 | — |
| SR-7625 | 6.0 | 767 | — | 8.5 | 1106 | — |
| HS-6 | 9.5 | 894 | — | 10.5 | 994 | — |

### #452664
250 gr. (#2 Alloy) 1.570" OAL

**BC:** .150
**SD:** .175

| Powder | Sugg Starting Grains | Velocity fps | Pressure | Max Load Grains | Velocity fps | Pressure |
|---|---|---|---|---|---|---|
| Red Dot | 5.8 | 928 | — | 6.5 | 1005 | — |
| **700X** | 5.4 | 936 | — | **6.0** | **991** | — |
| Titegroup | 5.6 | 966 | — | 6.2 | 1020 | — |
| N320 | 6.0 | 879 | — | 6.8 | 976 | — |
| Green Dot | 6.3 | 970 | — | 7.0 | 1027 | — |
| 231 | 6.5 | 931 | — | 7.4 | 1031 | — |
| PB | 6.7 | 922 | — | 7.5 | 1010 | — |
| AA#5 | 9.5 | 1062 | — | 10.5 | 1133 | — |
| Unique | 6.3 | 913 | — | 8.2 | 1101 | — |
| SR-7625 | 7.0 | 882 | — | 8.5 | 1030 | — |
| HS-6 | 8.5 | 882 | — | 10.5 | 1066 | — |

### #452424
255 gr. (#2 Alloy) 1.575" OAL

**BC:** .210
**SD:** .178

| Powder | Sugg Starting Grains | Velocity fps | Pressure | Max Load Grains | Velocity fps | Pressure |
|---|---|---|---|---|---|---|
| Red Dot | 4.5 | 746 | — | 6.0 | 947 | — |
| **Titegroup** | 5.6 | 933 | — | **6.2** | **1009** | — |
| 700X | 4.5 | 809 | — | 6.0 | 993 | — |
| N320 | 5.8 | 790 | — | 6.7 | 941 | — |
| 231 | 6.5 | 930 | — | 7.2 | 996 | — |
| AA#5 | 10.0 | 1119 | — | 10.7 | 1204 | — |
| Unique | 6.0 | 836 | — | 8.5 | 1110 | — |
| SR-7625 | 6.0 | 775 | — | 8.0 | 1054 | — |
| HS-6 | 8.8 | 832 | — | 10.3 | 990 | — |

**Note:** Loads shown in shaded panels are maximum.
Loads shown in bold designate potentially most accurate load.

# 45-70 Government (For 1873 Springfield)

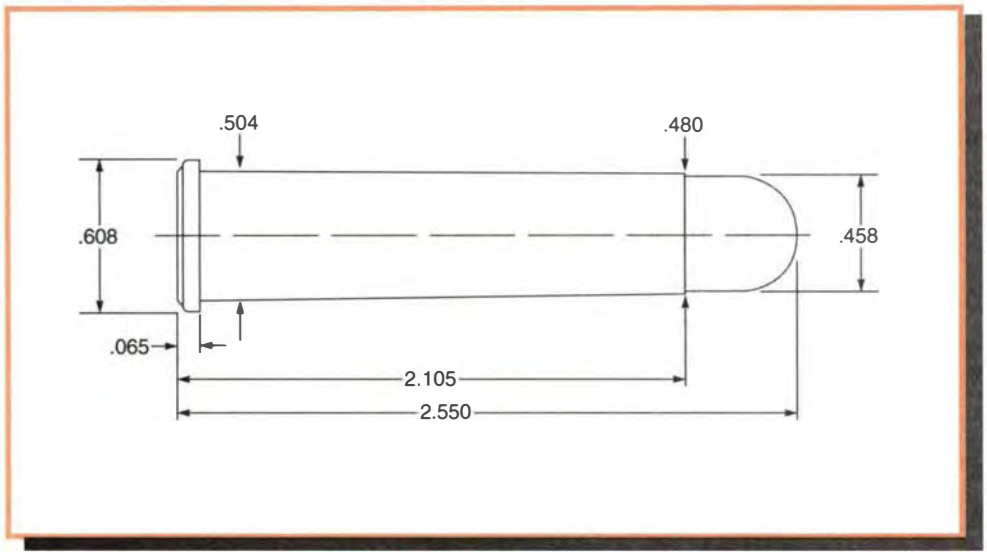


**Comments:**

Few rifle cartridges rival the longevity and versatility of the 45-70 Government. The United States Army adopted this cartridge in 1873 as a replacement for the short lived 50-70. The 45-70 has become synonymous with the Model 1873 Springfield rifle, nicknamed the "Trapdoor" due to the unique operation of its hinged breech. The cartridge was originally designated the 45-70-500 to indicate its 45-caliber bullet, 70-grains black powder, and 500-grain bullet composition. The Army subsequently developed a lighter load designated the 45-55-405 for use in cavalry carbines. The 30-40 Krag rifle and cartridge officially replaced the Trapdoor Springfield in 1892 but it soldiered on in various military units well into the twentieth century. It survived into the age of smokeless powder and is currently one of the more popular cartridges in the realm of handloading.

The three different loading levels of the 45-70 listed in *Lyman's 48th Edition* reflect this cartridge's versatility. The Trapdoor Springfield is not regarded as a strong action. It is perfectly adequate for its intended black powder pressure levels but shooters must exercise extreme caution when loading the modern smokeless powders. Overzealous reloaders have destroyed more than one Trapdoor through high-pressure loads. The following data is held to a pressure level of 18,000 CUP for use in the Model 1873 Trapdoor. It is also suitable for Remington Rolling Blocks, Sharps Rifles and replicas of any of these rifles as well as the Harrington & Richardson Trapdoor. The exclusive use of cast bullets is recommended for the older, original rifles. As one might expect, many of these rifles show variations in groove diameters. Shooters should slug the bore and size cast bullets accordingly for best accuracy. Never fire any older 45-70 unless it has been thoroughly checked over by a qualified gunsmith.

Older cases of unknown age or origin should not be used as they may be of the weak balloon head construction or have been fired with mercuric primers. The wide availability of current production cases renders use of such older cases unwise and unnecessary. Cast bullet #457125 duplicates the original 500-grain military bullet and has been in our product line for over 100 years. This has been a very accurate bullet in Black Powder Cartridge Silhouette competition. Reloder 7 has long been a favorite for loading both jacketed and cast bullets in the 45-70. XMP-5744 also works well with cast bullets.

**Test Components:**

Cases . . . . . .Remington
Trim-to Length . . . . . .2.095"
Primers . . . . . .Remington 9½
Primer Size . . . . . .Large Rifle
Lyman Shell Holder . . . . . .No. 17
Jacketed Bullets Used . . . .Nosler PP #45325, 300 gr.
Remington SP, #B22899, 405 gr.
Cast Bullets Used . . . . . .(sized to .458" dia)
#457191, 292 gr.
#457122, 330 gr.
#457124, 385 gr.
#457193, 405 gr.
#457125, 500 gr.
#457658, 500 gr.
#457132, 535 gr.

**Test Specifications:**
**(Velocity & Pressure)**

Firearm Used . . . . . .Universal Receiver
Barrel Length . . . . . .24" & 30"
Twist . . . . . .1-18"
Groove Dia. . . . . .457"

**Note:** Loads shown in shaded panels are maximum.
Loads shown in bold designate potentially most accurate load.

# 45-70 Government (For 1873 Springfield)

**300 gr. Jacketed PP**
2.500" OAL
**BC:** .199
**SD:** .204

| Powder | Sugg Starting Grains | Velocity fps | Pressure C.U.P. | Max Load Grains | Velocity fps | Pressure C.U.P. |
|---|---|---|---|---|---|---|
| SR-4759 | 24.0 | 1290 | 14,700 | 27.0 | 1421 | 16,500 |
| XMP-5744 | 28.5 | 1263 | 13,300 | 32.0 | 1423 | 17,200 |
| N130 | 37.0 | 1432 | 14,200 | 41.0 | 1620 | 17,700 |
| IMR-4198 | 31.0 | 1613 | 14,500 | 36.0 | 1692 | 16,300 |
| RX7 | 36.0 | 1589 | 15,600 | 38.0 | 1652 | 17,000 |
| **IMR-3031** | 45.5 | 1580 | 14,500 | **48.0** | **1661** | **16,300** |
| Varget | 47.0 | 1447 | 13,300 | 52.5 | 1617 | 16,700 |

**405 gr. Jacketed SP**
2.550" OAL
**BC:** .251
**SD:** .277

| Powder | Sugg Starting Grains | Velocity fps | Pressure C.U.P. | Max Load Grains | Velocity fps | Pressure C.U.P. |
|---|---|---|---|---|---|---|
| IMR-4198 | 33.0 | 1321 | 13,800 | 35.5 | 1433 | 16,700 |
| XMR-2015 | 40.0 | 1349 | 13,100 | 44.0 | 1495 | 17,800 |
| **RX7** | 35.0 | 1337 | 13,900 | **37.0** | **1440** | **16,000** |
| H322 | 41.0 | 1294 | 12,300 | 46.0 | 1485 | 17,300 |
| IMR-3031 | 42.0 | 1280 | 13,700 | 44.5 | 1416 | 16,700 |
| N135 | 42.0 | 1278 | 12,400 | 47.0 | 1450 | 16,300 |
| Varget | 44.0 | 1275 | 12,000 | 49.0 | 1467 | 16,600 |

**#457191**
292 gr. (#2 Alloy) 2.550" OAL
**BC:** .201
**SD:** .199

| Powder | Sugg Starting Grains | Velocity fps | Pressure C.U.P. | Max Load Grains | Velocity fps | Pressure C.U.P. |
|---|---|---|---|---|---|---|
| SR-4759 | 26.0 | 1311 | 9,400 | 30.0 | 1602 | 14,600 |
| **XMP-5744** | 29.0 | 1376 | 10,500 | **33.0** | **1502** | **14,200** |
| N130 | 38.0 | 1443 | 9,800 | 42.5 | 1659 | 15,400 |
| XMR-2015 | 47.0 | 1608 | 11,800 | 53.0 | 1804 | 16,800 |
| RX7 | 50.0 | 1779 | 11,900 | 55.0 | 2011 | 16,500 |
| IMR-3031 | 48.0 | 1467 | 11,400 | 53.0+ | 1706 | 16,800 |
| Varget | 53.0 | 1591 | 13,000 | 59.0+ | 1799 | 17,100 |

**#457122**
330 gr. (#2 Alloy) 2.550" OAL
**BC:** .274
**SD:** .225

| Powder | Sugg Starting Grains | Velocity fps | Pressure C.U.P. | Max Load Grains | Velocity fps | Pressure C.U.P. |
|---|---|---|---|---|---|---|
| SR-4759 | 26.5 | 1454 | 13,000 | 28.0 | 1533 | 15,200 |
| XMP-5744 | 29.0 | 1357 | 13,700 | 32.5 | 1485 | 17,300 |
| N130 | 40.0 | 1540 | 14,400 | 45.2 | 1680 | 16,500 |
| IMR-4198 | 34.0 | 1440 | 12,100 | 38.0 | 1595 | 15,100 |
| XMR-2015 | 41.0 | 1485 | 13,700 | 46.5 | 1654 | 17,700 |
| RX7 | 40.0 | 1633 | 14,600 | 42.0 | 1711 | 16,600 |
| **IMR-3031** | **43.0** | **1338** | **10,600** | 47.5 | 1532 | 15,300 |
| Varget | 48.0 | 1379 | 9,500 | 53.0 | 1600 | 15,500 |

**#457124**
385 gr. (#2 Alloy) 2.540" OAL
**BC:** .299
**SD:** .262

| Powder | Sugg Starting Grains | Velocity fps | Pressure C.U.P. | Max Load Grains | Velocity fps | Pressure C.U.P. |
|---|---|---|---|---|---|---|
| **SR-4759** | 24.0 | 1252 | 10,400 | **26.5** | **1426** | **16,600** |
| XMP-5744 | 26.5 | 1217 | 12,500 | 29.5 | 1324 | 16,000 |
| IMR-4198 | 30.5 | 1298 | 11,300 | 34.0 | 1441 | 16,000 |
| N130 | 36.0 | 1367 | 12,600 | 40.0 | 1509 | 16,000 |
| XMR-2015 | 39.0 | 1403 | 14,400 | 43.5 | 1542 | 17,200 |
| RX7 | 38.5 | 1543 | 14,400 | 41.0 | 1649 | 17,400 |
| IMR-3031 | 40.0 | 1254 | 9,100 | 44.5 | 1449 | 15,800 |
| Varget | 44.0 | 1292 | 9,700 | 49.0 | 1504 | 15,700 |

**#457193**
405 gr. (#2 Alloy) 2.550" OAL
**BC:** .307
**SD:** .276

| Powder | Sugg Starting Grains | Velocity fps | Pressure C.U.P. | Max Load Grains | Velocity fps | Pressure C.U.P. |
|---|---|---|---|---|---|---|
| SR-4759 | 24.0 | 1258 | 12,600 | 26.5 | 1415 | 17,700 |
| XMP-5744 | 26.0 | 1189 | 12,200 | 29.0 | 1313 | 16,100 |
| **IMR-4198** | 31.5 | 1312 | 12,400 | **35.0** | **1463** | **17,700** |
| XMR-2015 | 36.0 | 1247 | 12,300 | 40.0 | 1399 | 16,600 |
| RX7 | 37.0 | 1534 | 16,400 | 39.0 | 1578 | 17,900 |
| IMR-3031 | 34.0 | 1161 | 11,100 | 38.5 | 1352 | 16,000 |
| N135 | 42.0 | 1272 | 11,100 | 46.5 | 1510 | 17,400 |
| Varget | 42.0 | 1258 | 11,100 | 46.5 | 1436 | 15,800 |

**Note:** Loads shown in shaded panels are maximum.
Loads shown in bold designate potentially most accurate load.
* Fired in a 30" barrel.

# 45-70 Government (For 1873 Springfield)

**#457125**
500 gr. (#2 Alloy) 2.835" OAL
**BC:** .391
**SD:** .341

| Powder | Sugg Starting Grains | Velocity fps | Pressure C.U.P. | Max Load Grains | Velocity fps | Pressure C.U.P. |
|---|---|---|---|---|---|---|
| SR-4759 | 21.0 | 1108 | 13,400 | 24.0 | 1216 | 16,700 |
| **XMP-5744** | **25.0** | **1088** | **14,200** | 28.0 | 1183 | 17,400 |
| IMR-4198 | 28.5 | 1107 | 12,300 | 31.5 | 1287 | 16,700 |
| XMR-2015 | 32.0 | 1079 | 10,500 | 35.5 | 1243 | 17,500 |
| RX7 | 30.0 | 1119 | 11,100 | 34.0 | 1284 | 15,100 |
| IMR-3031 | 38.0 | 1075 | 12,400 | 42.0 | 1332 | 17,900 |
| N135 | 39.0 | 1123 | 13,100 | 43.5 | 1369 | 17,700 |
| Varget | 40.5 | 1150 | 13,000 | 45.0 | 1356 | 16,700 |

***#457658**
500 gr. (20 to 1) 2.990" OAL
**BC:** .372
**SD:** .341

| Powder | Sugg Starting Grains | Velocity fps | Pressure C.U.P. | Max Load Grains | Velocity fps | Pressure C.U.P. |
|---|---|---|---|---|---|---|
| SR-4759 | 23.5 | 1127 | 12,100 | 27.5 | 1369 | 16,300 |
| **XMP-5744** | **26.5** | **1253** | **15,600** | 28.0 | 1317 | 17,900 |
| IMR-4198 | 28.0 | 1354 | 10,400 | 32.0 | 1418 | 17,200 |
| RX7 | 35.0 | 1220 | 15,200 | 40.0 | 1603 | 17,100 |
| IMR-3031 | 37.0 | 1308 | 12,000 | 40.0 | 1412 | 16,400 |
| IMR-4895 | 42.0 | 1376 | 16,300 | 45.0 | 1459 | 17,400 |
| Varget | 40.0 | 1248 | 12,900 | 43.5 | 1424 | 16,000 |

***#457132**
535 gr. (20 to 1) 2.930" OAL
**BC:** .402
**SD:** .364

| Powder | Sugg Starting Grains | Velocity fps | Pressure C.U.P. | Max Load Grains | Velocity fps | Pressure C.U.P. |
|---|---|---|---|---|---|---|
| SR-4759 | 23.0 | 1064 | 7,600 | 26.5 | 1245 | 15,700 |
| **XMP-5744** | **23.0** | **1101** | **13,000** | 28.0 | 1310 | 17,900 |
| IMR-4198 | 28.0 | 1221 | 13,300 | 31.5 | 1326 | 17,000 |
| RX7 | 36.0 | 1230 | 10,600 | 41.0 | 1498 | 18,000 |
| IMR-3031 | 36.0 | 1204 | 11,600 | 41.0 | 1409 | 18,000 |
| IMR-4895 | 37.0 | 1274 | 11,200 | 42.0 | 1370 | 18,000 |
| Varget | 41.5 | 1308 | 10,100 | 46.5 | 1520 | 18,000 |

**Note:** Loads shown in shaded panels are maximum.
Loads shown in bold designate potentially most accurate load.
* Fired in a 30" barrel.

# 45-70 Government (For 1886 Winchester and 1895 Marlin Only)

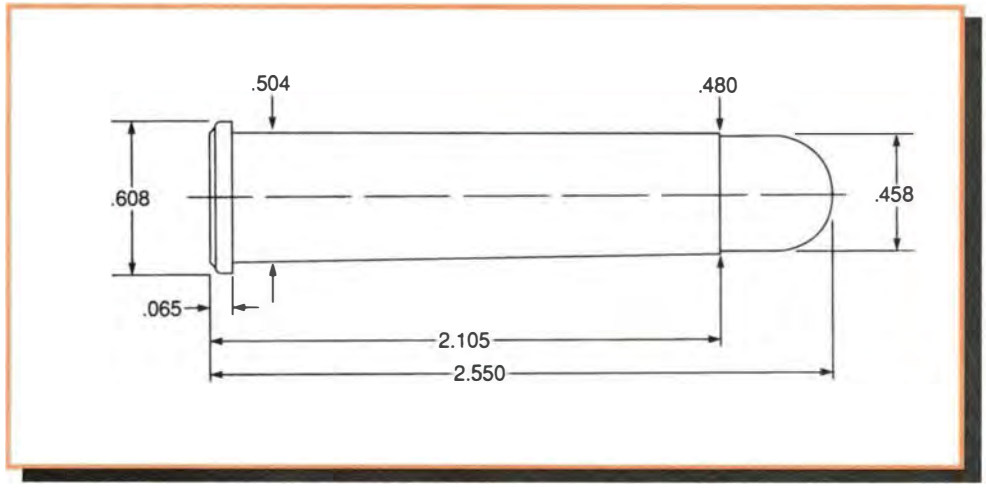


**Comments:**

The 45-70 Government has proven itself on most North American game over the last 130 years. Those looking for an effective, large caliber brush cartridge out to 150 yards would be hard pressed to beat it without going belted. The stronger lock up of the Winchester Model 1886 and Marlin 1895 lever action rifles allow the reloader to safely exceed the pressure levels associated with the elderly Trapdoor rifles. The data listed in this section is worked up to the SAAMI Maximum Average Pressure (MAP) of 28,000 CUP. Cartridges intended for lever action rifles should not exceed 2.550" overall length and must be crimped. Cast bullet # 457643 is specifically designed for lever-action rifles and gives excellent expansion when cast in a 20 to 1 alloy. Some Marlin rifles utilize shallow Micro-Groove® rifling. Bullet alloy should be at least 15 bhn and velocities should remain below 1,600 feet per second if cast bullet accuracy is to be acceptable in these rifles.

***This data is not safe for Trapdoor Springfields or any of the rifles listed in the previous data section for 45-70. It is intended for use in Model 1886 Winchester/Browning rifles and the 1895 Marlin rifle. Use of this data in Trapdoor Rifles is potentially hazardous.***

**Test Components:**

Cases . . . . . .Remington
Trim-to Length . . . . . .2.095"
Primers . . . . . .Remington 9½
Primer Size . . . . . .Large Rifle
Lyman Shell Holder . . . . . .No. 17
Jacketed Bullets Used . . . .Nosler PP #45325, 300 gr.
Remington SP #B22899, 405 gr.
Cast Bullets Used . . . . . .(sized to .458" dia)
#457191, 292 gr.
#457122, 330 gr.
#457643, 400 gr.
#457193, 405 gr.

**Test Specifications:**
**(Velocity & Pressure)**

Firearm Used . . . . . .Universal Receiver
Barrel Length . . . . . .24"
Twist . . . . . .1-18"
Groove Dia. . . . . .457"

**300 gr. Jacketed PP**
2.500" OAL
**BC:** .199
**SD:** .204

| Powder | Sugg Starting Grains | Velocity fps | Pressure C.U.P. | Max Load Grains | Velocity fps | Pressure C.U.P. |
|---|---|---|---|---|---|---|
| XMP-5744 | 37.0 | 1624 | 19,500 | 41.0 | 1804 | 26,800 |
| IMR-4198 | 36.0 | 1688 | 17,000 | 41.0 | 1780 | 24,800 |
| RX7 | 38.0 | 1628 | 17,000 | 45.0 | 1811 | 26,100 |
| N130 | 49.0 | 1878 | 20,700 | 53.0 | 2101 | 27,400 |
| XMR-2015 | 50.0 | 1847 | 21,200 | 55.0 | 2045 | 26,900 |
| IMR-3031 | 48.0 | 1657 | 17,000 | 51.0 | 1881 | 25,300 |
| H-322 | 51.0 | 1732 | 17,400 | 56.7 | 2038 | 27,400 |
| **H-4895** | 56.0 | 1713 | 16,700 | **62.0+** | **2021** | **27,300** |
| IMR-4064 | 55.0 | 1611 | 15,900 | 61.0+ | 1852 | 24,600 |
| Varget | 57.0 | 1821 | 18,600 | 64.0+ | 2051 | 26,100 |

**405 gr. Jacketed SP**
2.550" OAL
**BC:** .251
**SD:** .277

| Powder | Sugg Starting Grains | Velocity fps | Pressure C.U.P. | Max Load Grains | Velocity fps | Pressure C.U.P. |
|---|---|---|---|---|---|---|
| IMR-4198 | 37.0 | 1513 | 19,100 | 41.0 | 1661 | 25,700 |
| RX7 | 41.0 | 1602 | 20,500 | 46.0 | 1795 | 27,100 |
| N130 | 43.5 | 1556 | 19,300 | 48.5 | 1744 | 26,900 |
| XMR-2015 | 44.5 | 1479 | 19,200 | 49.5 | 1679 | 27,700 |
| **IMR-3031** | 46.0 | 1469 | 17,700 | **51.5** | **1702** | **26,200** |
| H-322 | 45.0 | 1430 | 15,100 | 50.0 | 1683 | 24,300 |
| H-4895 | 49.0 | 1439 | 15,900 | 55.0+ | 1730 | 26,500 |
| IMR-4064 | 49.0 | 1466 | 19,500 | 54.5+ | 1640 | 26,600 |
| Varget | 50.0 | 1481 | 16,500 | 56.0+ | 1752 | 26,400 |

**Note:** Loads shown in shaded panels are maximum.
Loads shown in bold designate potentially most accurate load.
\+ Designates a compressed powder charge.

# 45-70 Government (For 1886 Winchester and 1895 Marlin Only)

**#457191**
292 gr. (#2 Alloy) 2.550" OAL
**BC:** .201
**SD:** .199

| Powder | Sugg Starting Grains | Velocity fps | Pressure C.U.P. | Max Load Grains | Velocity fps | Pressure C.U.P. |
|---|---|---|---|---|---|---|
| SR-4759 | 30.0 | 1602 | 14,600 | 34.0 | 1802 | 21,000 |
| **XMP-5744** | 38.0 | 1687 | 17,900 | **42.0** | **1908** | **26,800** |
| IMR-4198 | 34.5 | 1613 | 16,600 | 49.7 | 2065 | 24,600 |
| XMR-2015 | 54.5 | 1857 | 19,100 | 58.5 | 2065 | 25,700 |
| N130 | 51.5 | 1857 | 15,800 | 57.5 | 2139 | 24,800 |
| H322 | 55.0 | 1775 | 16,200 | 61.0+ | 2097 | 26,700 |

**#457122**
330 gr. (#2 Alloy) 2.550" OAL
**BC:** .274
**SD:** .225

| Powder | Sugg Starting Grains | Velocity fps | Pressure C.U.P. | Max Load Grains | Velocity fps | Pressure C.U.P. |
|---|---|---|---|---|---|---|
| SR-4759 | 30.0 | 1637 | 17,200 | 33.5 | 1823 | 27,200 |
| XMP-5744 | 34.0 | 1571 | 17,200 | 38.0 | 1726 | 24,700 |
| IMR-4198 | 40.0 | 1784 | 20,900 | 44.0 | 1912 | 25,300 |
| **XMR-2015** | 50.0 | 1768 | 18,000 | **55.0** | **1994** | **26,400** |
| N130 | 48.0 | 1798 | 18,200 | 54.0 | 2027 | 24,900 |
| H322 | 49.0 | 1631 | 21,200 | 54.5 | 1911 | 24,800 |
| RX7 | 49.0 | 1853 | 16,700 | 55.0 | 2096 | 25,100 |
| IMR-3031 | 50.0 | 1665 | 16,900 | 55.0+ | 1900 | 26,000 |
| Varget | 56.0 | 1798 | 19,100 | 62.0+ | 2019 | 27,000 |

**#457643**
400 gr. (#2 Alloy) 2.530" OAL
**BC:** .280
**SD:** .272

| Powder | Sugg Starting Grains | Velocity fps | Pressure C.U.P. | Max Load Grains | Velocity fps | Pressure C.U.P. |
|---|---|---|---|---|---|---|
| SR-4759 | 26.0 | 1405 | 17,600 | 29.0 | 1550 | 27,300 |
| IMR-4227 | 31.0 | 1481 | 21,400 | 34.5 | 1597 | 26,500 |
| **XMP-5744** | **31.5** | **1421** | **20,100** | 35.0 | 1560 | 26,900 |
| IMR-4198 | 35.5 | 1535 | 19,400 | 39.5 | 1699 | 27,500 |
| XMR-2015 | 41.0 | 1457 | 17,700 | 45.5 | 1639 | 26,400 |
| N130 | 41.0 | 1562 | 21,400 | 46.5 | 1786 | 26,200 |
| H322 | 43.0 | 1462 | 16,200 | 47.5+ | 1717 | 26,800 |
| Varget | 48.5 | 1522 | 17,700 | 54.0+ | 1760 | 27,200 |

**#457193**
405 gr. (#2 Alloy) 2.550" OAL
**BC:** .307
**SD:** .276

| Powder | Sugg Starting Grains | Velocity fps | Pressure C.U.P. | Max Load Grains | Velocity fps | Pressure C.U.P. |
|---|---|---|---|---|---|---|
| SR-4759 | 26.5 | 1429 | 19,000 | 29.5 | 1577 | 25,600 |
| XMP-5744 | 32.0 | 1434 | 19,900 | 36.0 | 1600 | 27,000 |
| IMR-4198 | 36.5 | 1533 | 18,300 | 40.5 | 1717 | 27,500 |
| XMR-2015 | 42.5 | 1504 | 17,600 | 47.5 | 1712 | 26,100 |
| N130 | 43.0 | 1612 | 19,000 | 48.0 | 1828 | 27,300 |
| H322 | 43.5 | 1469 | 16,100 | 48.5 | 1740 | 27,100 |
| **Varget** | **49.5** | **1591** | **18,400** | 55.0+ | 1772 | 26,300 |

**Note:** Loads shown in shaded panels are maximum.
Loads shown in bold designate potentially most accurate load.
\+ Designates a compressed powder charge.

# 45-70 Government (For Ruger No. 1 and No. 3 Only)

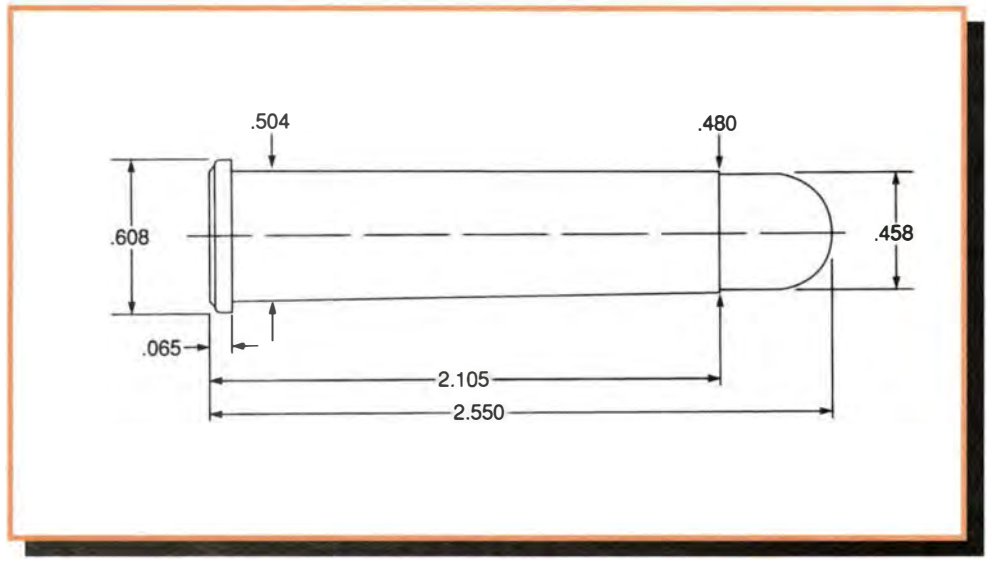


**Comments:**

The performance of the 45-70 Government is impeded only by the strength of the rifles for which it is chambered. 45-70 factory ammunition has always been loaded on the light side due to the large numbers of older, weaker designed rifles in circulation. Handloading is particularly advantageous when the shooter possesses a Ruger #1 or one of numerous Siamese Mausers converted to 45-70.

The following data is worked up to a Maximum Average Pressure (MAP) of 40,000 CUP. Some of the listed loads exceed the SAAMI maximum overall length of 2.550 inches but will not be a problem with single shot rifles. Heavily compressed loads should be crimped regardless of rifle type to prevent cartridges from "growing" in length after seating. Shooters using any of the following data should take careful precautions that no cartridges accidentally find their way into Trapdoor or lever action rifles. Those loading 45-70 ammunition to more than one pressure level for different rifles should mark the primer or bottom of the case head with a marker to identify one batch from the other. Reloaders should also consider using dif erent brand cases to further reduce the chance of a high-pressure load being mistakenly fired in a weaker gun.

***The following data should not be used in any other rifles than the Ruger No. 1, Ruger No. 3, or bolt-action rifle built upon a Model 98 action rifle that has been deemed safe by a qualified gunsmith. They should be loaded only in newly manufactured cases that have not been repeatedly fired. Firing any of the following loads in any weaker gun listed in a previous section will be dangerous.***

**Test Components:**

Cases . . . . . .Remington
Trim-to Length . . . . . .2.095"
Primers . . . . . .Remington 9½
Primer Size . . . . . .Large Rifle
Lyman Shell Holder . . . . . .No. 17
Jacketed Bullets Used . . . .Nosler PP #45325, 300 gr.
Speer SP #2478, 350 gr.
Speer FN #2479, 400 gr.
Hornady RN #4504, 500 gr.
Cast Bullets Used . . . . . .(sized to .458" dia)
*gas check bullet #457122, 292 gr.
#457124, 385 gr.
#457193, 405 gr.
*#457671, 475 gr.
#457125, 500 gr.
#457132, 535 gr.

**Test Specifications:**
**(Velocity & Pressure)**

Firearm Used . . . . . .Universal Receiver
Barrel Length . . . . . .24" + 28"
Twist . . . . . .1-18", 1-20"
Groove Dia. . . . . .457", .456"

# 45-70 Government (For Ruger No. 1 and No. 3 Only)

**300 gr. Jacketed PP**
2.550" OAL
**BC:** .199
**SD:** .204

| Powder | Sugg Starting Grains | Velocity fps | Pressure C.U.P. | Max Load Grains | Velocity fps | Pressure C.U.P. |
|---|---|---|---|---|---|---|
| SR-4759 | 35.0 | 1786 | 23,000 | 42.0 | 2045 | 37,000 |
| IMR-4227 | 32.0 | 1702 | 22,800 | 38.0 | 1974 | 36,300 |
| *XMP-5744 | 41.0 | 1803 | 26,900 | 46.0 | 1984 | 39,800 |
| IMR-4198 | 49.0 | 2047 | 24,000 | 55.0+ | 2347 | 35,200 |
| *RX7 | 51.0 | 2092 | 32,900 | 57.0+ | 2267 | 38,700 |
| ***N130** | 51.0 | 2001 | 29,800 | **57.0+** | **2196** | **37,300** |
| *XMR-2015 | 52.0 | 1907 | 31,900 | 58.5+ | 2135 | 39,200 |
| IMR-3031 | 55.0 | 1958 | 26,400 | 60.0+ | 2076 | 25,000 |
| H-322 | 55.0 | 1984 | 23,900 | 62.0+ | 2076 | 22,400 |
| *H-4895 | 58.0 | 1797 | 23,400 | 63.0+ | 2081 | 32,800 |

***350 gr. Jacketed SP**
2.710" OAL
**BC:** .232
**SD:** .238

| Powder | Sugg Starting Grains | Velocity fps | Pressure C.U.P. | Max Load Grains | Velocity fps | Pressure C.U.P. |
|---|---|---|---|---|---|---|
| IMR-4198 | 45.0 | 1881 | 31,500 | 50.0 | 2098 | 38,700 |
| RX7 | 47.0 | 1942 | 31,900 | 53.0 | 2119 | 39,100 |
| XMR-2015 | 48.0 | 1689 | 27,400 | 53.5 | 1881 | 36,900 |
| IMR-3031 | 51.0 | 1709 | 27,900 | 57.0+ | 1975 | 35,700 |
| Benchmark | 51.0 | 1743 | 27,100 | 57.0 | 2025 | 36,600 |
| H-322 | 51.0 | 1751 | 24,400 | 57.0 | 2051 | 36,700 |
| **N133** | 52.0 | 1914 | 29,200 | **58.0+** | **2152** | **37,100** |
| H-335 | 59.0 | 1928 | 27,800 | 66.0+ | 2152 | 38,000 |

***400 gr. Jacketed FN**
2.550" OAL
**BC:** .214
**SD:** .272

| Powder | Sugg Starting Grains | Velocity fps | Pressure C.U.P. | Max Load Grains | Velocity fps | Pressure C.U.P. |
|---|---|---|---|---|---|---|
| XMR-2015 | 46.0 | 1625 | 26,200 | 51.0 | 1838 | 35,600 |
| H-322 | 48.0 | 1630 | 25,800 | 53.0 | 1915 | 39,900 |
| **H-335** | 55.0 | 1730 | 29,500 | **60.5** | **1875** | **36,700** |
| N135 | 50.0 | 1679 | 25,100 | 56.0 | 1924 | 37,500 |

**500 gr. Jacketed RN**
2.930" OAL
**BC:** .287
**SD:** .341

| Powder | Sugg Starting Grains | Velocity fps | Pressure C.U.P. | Max Load Grains | Velocity fps | Pressure C.U.P. |
|---|---|---|---|---|---|---|
| IMR-4198 | 35.0 | 1440 | 27,500 | 43.0 | 1657 | 38,400 |
| RX7 | 37.0 | 1487 | 31,200 | 45.5 | 1738 | 39,100 |
| *XMR-2015 | 44.0 | 1529 | 29,800 | 49.0 | 1695 | 37,000 |
| IMR-3031 | 44.0 | 1444 | 22,300 | 53.1+ | 1742 | 32,700 |
| *H-322 | 44.0 | 1460 | 27,200 | 49.0 | 1673 | 36,500 |
| H-4895 | 50.0 | 1646 | 28,100 | 57.0 | 1879 | 39,000 |
| ***N135** | 47.0 | 1543 | 28,000 | **52.2** | **1735** | **38,800** |
| *Varget | 49.0 | 1533 | 29,700 | 55.0 | 1759 | 39,600 |
| *AA2520 | 50.5 | 1608 | 31,100 | 56.0 | 1768 | 39,600 |

***#457122 HP**
330 gr. (#2 Alloy) 2.550" OAL
**BC:** .274
**SD:** .225

| Powder | Sugg Starting Grains | Velocity fps | Pressure C.U.P. | Max Load Grains | Velocity fps | Pressure C.U.P. |
|---|---|---|---|---|---|---|
| **XMP-5744** | **39.5** | **1750** | **26,300** | 44.0 | 1941 | 37,400 |
| IMR-4227 | 39.8 | 1842 | 22,900 | 44.0 | 2035 | 38,800 |
| IMR-4198 | 44.0 | 1862 | 24,500 | 49.0 | 2090 | 36,300 |
| N130 | 51.5 | 1945 | 24,200 | 57.0+ | 2209 | 37,000 |
| RX7 | 53.0 | 2016 | 23,200 | 59.0+ | 2255 | 35,500 |
| XMR-2015 | 54.0 | 1843 | 24,000 | 60.0+ | 2094 | 36,900 |

***#457124**
385 gr. (#2 Alloy) 2.540" OAL
**BC:** .299
**SD:** .262

| Powder | Sugg Starting Grains | Velocity fps | Pressure C.U.P. | Max Load Grains | Velocity fps | Pressure C.U.P. |
|---|---|---|---|---|---|---|
| XMP-5744 | 36.0 | 1584 | 24,200 | 40.0 | 1744 | 37,800 |
| IMR-4198 | 40.5 | 1712 | 25,100 | 45.0 | 1924 | 37,100 |
| **N130** | 47.5 | 1828 | 24,900 | **53.0+** | **2057** | **37,700** |
| XMR-2015 | 49.5 | 1724 | 28,600 | 55.0+ | 1947 | 36,800 |
| RX7 | 49.5 | 1896 | 25,000 | 55.0+ | 2115 | 38,100 |
| H322 | 49.5 | 1750 | 25,600 | 55.0+ | 1993 | 38,300 |
| Varget | 53.0 | 1681 | 21,700 | 59.0+ | 1903 | 30,500 |

**Note:** Loads shown in shaded panels are maximum.
Loads shown in bold designate potentially most accurate load.
* Fired in a 24" barrel.
\+ Designates a compressed powder charge.

# 45-70 Government (For Ruger No. 1 and No. 3 Only)

***#457193**
405gr. (#2 Alloy) 2.550" OAL
**BC:** .307
**SD:** .276

| Powder | Sugg Starting Grains | Velocity fps | Pressure C.U.P. | Max Load Grains | Velocity fps | Pressure C.U.P. |
|---|---|---|---|---|---|---|
| SR-4759 | 30.0 | 1595 | 25,500 | 34.0 | 1743 | 36,900 |
| XMP-5744 | 35.0 | 1532 | 25,800 | 39.0 | 1715 | 38,900 |
| **IMR-4198** | **40.0** | **1684** | **26,800** | 44.5 | 1881 | 38,300 |
| RX7 | 46.0 | 1785 | 23,600 | 51.0 | 1996 | 36,800 |
| N130 | 46.0 | 1799 | 26,100 | 51.0 | 2009 | 38,700 |
| XMR-2015 | 51.0 | 1833 | 29,100 | 57.0+ | 2063 | 38,700 |
| H-322 | 47.0 | 1669 | 24,800 | 53.0 | 1909 | 37,000 |

***#457671**
475 gr. (#2 Alloy) 2.800" OAL
**BC:** .477
**SD:** .323

| Powder | Sugg Starting Grains | Velocity fps | Pressure C.U.P. | Max Load Grains | Velocity fps | Pressure C.U.P. |
|---|---|---|---|---|---|---|
| SR-4759 | 28.0 | 1415 | 25,000 | 31.0 | 1556 | 37,000 |
| XMP-5744 | 33.0 | 1413 | 25,200 | 37.0 | 1576 | 36,000 |
| IMR-4198 | 38.0 | 1570 | 26,300 | 42.5 | 1735 | 37,300 |
| RX7 | 43.0 | 1650 | 24,700 | 48.5 | 1819 | 34,900 |
| XMR-2015 | 48.0 | 1693 | 27,000 | 54.0+ | 1909 | 39,600 |
| **IMR-3031** | 47.0 | 1657 | 32,400 | **53.0+** | **1802** | **38,500** |
| H322 | 46.0 | 1539 | 21,800 | 51.0+ | 1811 | 38,800 |
| N135 | 47.0 | 1495 | 21,100 | 52.0+ | 1741 | 29,500 |
| Varget | 52.0 | 1699 | 29,400 | 58.0+ | 1876 | 37,700 |

***#457125**
500 gr. (#2 Alloy) 2.835" OAL
**BC:** .391
**SD:** .341

| Powder | Sugg Starting Grains | Velocity fps | Pressure C.U.P. | Max Load Grains | Velocity fps | Pressure C.U.P. |
|---|---|---|---|---|---|---|
| **SR-4759** | 29.0 | 1415 | 26,900 | **32.0** | **1537** | **39,700** |
| XMP-5744 | 33.0 | 1397 | 26,100 | 37.0 | 1540 | 35,200 |
| RX7 | 44.0 | 1636 | 27,500 | 49.0 | 1797 | 38,200 |
| XMR-2015 | 46.0 | 1600 | 24,600 | 52.0+ | 1795 | 37,400 |
| H-322 | 46.0 | 1554 | 24,700 | 51.0 | 1753 | 36,700 |
| N135 | 48.5 | 1571 | 22,900 | 54.0+ | 1801 | 38,200 |
| Varget | 50.0 | 1579 | 24,600 | 56.0+ | 1791 | 35,900 |

***#457132**
535 gr. (20 to 1) 2.930" OAL
**BC:** .402
**SD:** .364

| Powder | Sugg Starting Grains | Velocity fps | Pressure C.U.P. | Max Load Grains | Velocity fps | Pressure C.U.P. |
|---|---|---|---|---|---|---|
| SR-4759 | 27.0 | 1328 | 26,600 | 30.0 | 1445 | 37,100 |
| XMP-5744 | 33.0 | 1385 | 28,200 | 37.0 | 1519 | 37,600 |
| IMR-4198 | 38.0 | 1499 | 27,500 | 42.0 | 1648 | 38,100 |
| RX7 | 42.0 | 1501 | 24,500 | 45.5 | 1696 | 38,400 |
| **XMR-2015** | **46.0** | **1534** | **24,000** | 51.0+ | 1740 | 37,700 |
| IMR-3031 | 45.0 | 1469 | 24,100 | 50.0 | 1674 | 37,000 |
| H-322 | 44.0 | 1459 | 22,300 | 49.0 | 1685 | 37,100 |
| N135 | 48.0 | 1551 | 24,300 | 53.5 | 1767 | 37,600 |
| Varget | 49.0 | 1552 | 25,900 | 54.0 | 1760 | 37,800 |

**Note:** Loads shown in shaded panels are maximum.
Loads shown in bold designate potentially most accurate load.
* Fired in a 24" arrel.
\+ Designates a compressed powder charge.

# 450 Marlin

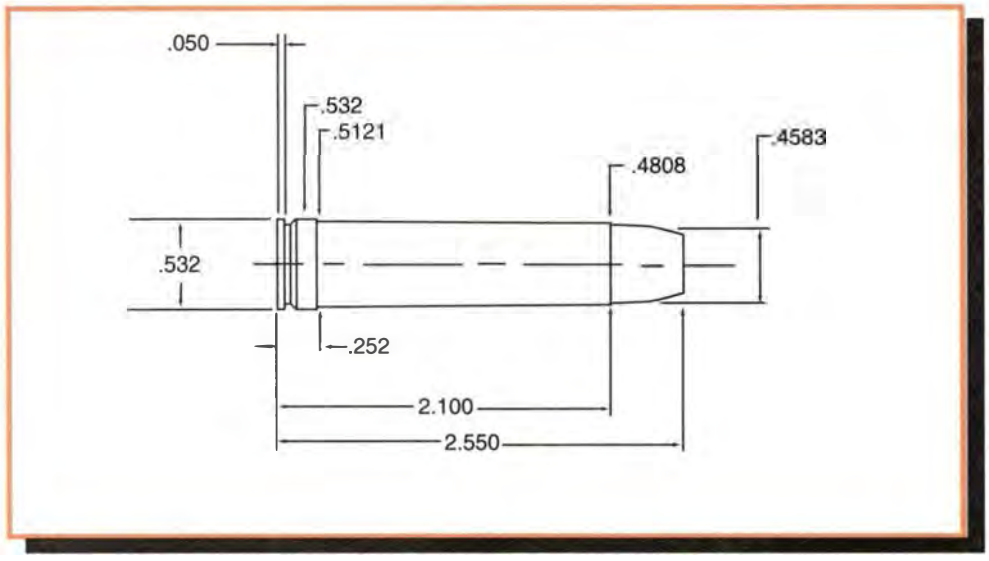


**Comments:**

The 450 Marlin evolved from a joint effort between Hornady and Marlin to produce a magnum version of the venerable old 45-70 Government. Readers of Lyman's reloading manual will find three different sections devoted to the 45-70 rifle with data appropriate to particular rifles. Shooters for many years now have hand-loaded 45-70 cartridges to higher than SAAMI approved levels for use in high-strength firearms such as the Ruger Number 1 and Mauser-based actions. The large number of older guns of weak or questionable design — notably the 1873 Trapdoor Springfield — prevented the 45-70 cartridge from ever being factory loaded to its full potential. The Marlin cartridge duplicates in standard factory form what was previously available only by handloading the 45-70. While below 458 Winchester Magnum level in performance, the 450 Marlin offers distinctly more punch than the 28,000 CUP level of current 45-70 factory ammo. The loading procedures for the Marlin are the same as the 45-70. Powders and components used in the 45-70 are also suitable for the Marlin.

**Test Components:**

Cases . . . . . .Hornady
Trim-to Length . . . . . .2.090"
Primers . . . . . .Winchester WLR
Primer Size . . . . . .Large Rifle
Lyman Shell Holder . . . . . No. 13
Jacketed Bullets Used . . .Barnes XFN #45831, 250 gr.
Hornady HP #4500, 300 gr.
Hornady FP #4503, 350 gr.
Speer FSP #2479, 400 gr.
Cast Bullets Used . . . . . .(sized to .457" dia)
#457122, 330 gr.
#457643, 400 gr.

**Test Specifications:**
**(Velocity & Pressure)**

Firearm Used . . . . . .Universal Receiver
Barrel Length . . . . . .24"
Twist . . . . . .1-20"
Groove Dia. . . . . .456"

**250 gr. Barnes XFN**
2.530" OAL
**BC:** .172
**SD:** .170

| Powder | Sugg Starting Grains | Velocity fps | Pressure P.S.I. | Max Load Grains | Velocity fps | Pressure P.S.I. |
|---|---|---|---|---|---|---|
| AA1680 | 43.5 | 1946 | 28,900 | 48.5 | 2214 | 39,300 |
| IMR-4198 | 44.0 | 1965 | 31,900 | 49.0 | 2246 | 41,700 |
| **RX7** | 45.5 | 1966 | 31,000 | **50.7** | **2183** | **35,900** |
| N130 | 46.0 | 1977 | 30,200 | 51.0 | 2247 | 39,800 |
| N133 | 51.0 | 2083 | 32,900 | 57.0+ | 2258 | 38,600 |
| Benchmark | 52.0 | 2024 | 31,100 | 58.0+ | 2184 | 35,700 |
| H-322 | 54.0 | 2083 | 34,100 | 60.0+ | 2246 | 39,300 |

**300 gr. Jacketed HP**
2.530" OAL
**BC:** .197
**SD:** .204

| Powder | Sugg Starting Grains | Velocity fps | Pressure P.S.I. | Max Load Grains | Velocity fps | Pressure P.S.I. |
|---|---|---|---|---|---|---|
| AA-1680 | 45.0 | 2029 | 31,600 | 50.5 | 2257 | 40,900 |
| IMR-4198 | 44.5 | 1997 | 30,000 | 49.5 | 2260 | 42,000 |
| **RX7** | 46.0 | 2047 | 31,300 | **51.5** | **2242** | **39,600** |
| XMR-2015 | 51.0 | 1919 | 31,000 | 56.5 | 2166 | 42,100 |
| N133 | 52.0 | 2070 | 29,900 | 57.5 | 2318 | 41,500 |
| Benchmark | 55.0 | 2106 | 34,500 | 61.5+ | 2273 | 41,300 |
| H-322 | 55.0 | 2128 | 35,500 | 61.0+ | 2288 | 42,600 |
| IMR-3031 | 55.0 | 2075 | 35,200 | 61.0+ | 2238 | 42,800 |
| 748 | 58.0 | 1969 | 29,900 | 64.0+ | 2136 | 34,000 |

**Note:** Loads shown in shaded panels are maximum.
Loads shown in bold designate potentially most accurate load.
\+ Designates a compressed powder charge.

### 350 gr. Jacketed FP
2.530" OAL

**BC:** .193
**SD:** .238

| Powder | Sugg Starting Grains | Velocity fps | Pressure P.S.I. | Max Load Grains | Velocity fps | Pressure P.S.I. |
|---|---|---|---|---|---|---|
| IMR-4198 | 41.0 | 1824 | 31,700 | 46.0 | 2028 | 41,100 |
| RX7 | 43.0 | 1837 | 33,500 | 48.0 | 2040 | 42,400 |
| XMR-2015 | 48.5 | 1807 | 34,400 | 54.0 | 2000 | 43,400 |
| N133 | 48.0 | 1857 | 30,300 | 53.0 | 2089 | 40,700 |
| **Benchmark** | 49.5 | 1798 | 30,800 | **55.0** | **2033** | **42,700** |
| H-322 | 50.0 | 1888 | 32,800 | 56.0+ | 2099 | 44,000 |
| IMR-3031 | 49.5 | 1791 | 31,200 | 55.0 | 2035 | 41,900 |
| AA2230 | 55.0 | 1991 | 36,400 | 61.0+ | 2188 | 43,600 |
| 748 | 56.0 | 1869 | 32,200 | 62.0+ | 2040 | 38,500 |

### 400 gr. Jacketed FSP
2.540" OAL

**BC:** .214
**SD:** .272

| Powder | Sugg Starting Grains | Velocity fps | Pressure P.S.I. | Max Load Grains | Velocity fps | Pressure P.S.I. |
|---|---|---|---|---|---|---|
| RX7 | 40.5 | 1726 | 33,800 | 45.0 | 1893 | 42,100 |
| XMR-2015 | 43.0 | 1599 | 31,000 | 48.0 | 1808 | 41,700 |
| N133 | 44.5 | 1735 | 30,500 | 49.5 | 1935 | 40,400 |
| **H-322** | 46.0 | 1665 | 28,600 | **51.0** | **1918** | **42,200** |
| IMR-3031 | 47.0 | 1692 | 32,800 | 52.0+ | 1915 | 42,900 |
| H-4895 | 50.0 | 1815 | 35,000 | 56.0+ | 1975 | 41,500 |
| 748 | 52.0 | 1720 | 30,900 | 58.0+ | 1891 | 40,000 |

### #457122
330 gr. (#2 Alloy) 2.535" OAL

**BC:** .274
**SD:** .226

| Powder | Sugg Starting Grains | Velocity fps | Pressure P.S.I. | Max Load Grains | Velocity fps | Pressure P.S.I. |
|---|---|---|---|---|---|---|
| SR-4759 | 28.0 | 1652 | 22,800 | 35.0 | 1970 | 40,300 |
| **IMR-4227** | 33.0 | 1663 | 23,200 | **41.0** | **2016** | **38,700** |
| XMP-5744 | 35.0 | 1662 | 24,300 | 44.0 | 2001 | 40,100 |
| IMR-4198 | 37.0 | 1666 | 22,300 | 45.0 | 2022 | 34,600 |
| RX7 | 39.0 | 1656 | 20,100 | 47.0 | 1992 | 31,500 |
| XMR-2015 | 44.0 | 1645 | 23,400 | 52.0 | 2010 | 38,200 |

### #457643
400 gr. (#2 Alloy) 2.505" OAL

**BC:** .280
**SD:** .274

| Powder | Sugg Starting Grains | Velocity fps | Pressure P.S.I. | Max Load Grains | Velocity fps | Pressure P.S.I. |
|---|---|---|---|---|---|---|
| **SR-4759** | 24.0 | 1408 | 23,700 | **30.0** | **1675** | **41,000** |
| IMR-4227 | 27.0 | 1383 | 22,500 | 35.0 | 1713 | 38,000 |
| XMP-5744 | 29.0 | 1408 | 24,400 | 37.0 | 1718 | 39,700 |
| IMR-4198 | 30.5 | 1417 | 21,500 | 38.0 | 1714 | 33,000 |
| RX7 | 31.0 | 1399 | 20,000 | 39.0 | 1721 | 33,000 |
| XMR-2015 | 37.0 | 1398 | 22,600 | 44.0 | 1708 | 37,800 |

**Note:** Loads shown in shaded panels are maximum.
Loads shown in bold designate potentially most accurate load.
\+ Designates a compressed powder charge.

# 45-90 Winchester

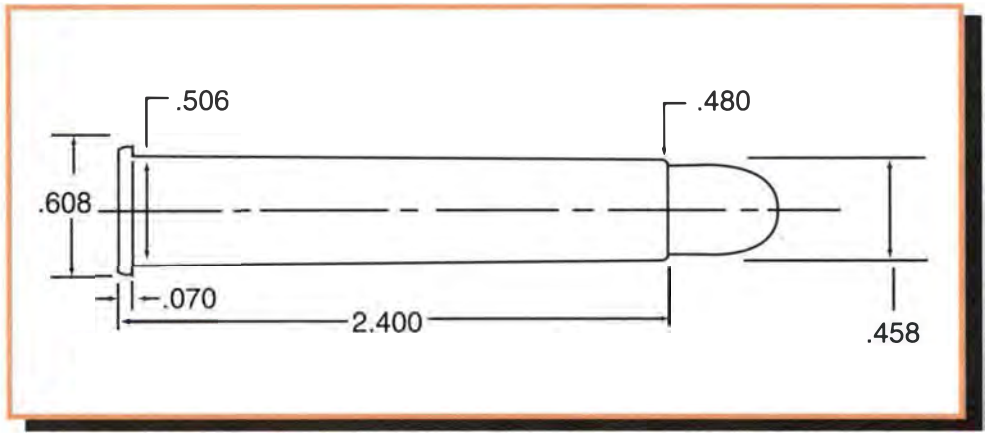


**Comments:**

The 45-90 had its origins with Winchester's 1885 High Wall and 1886 lever action. This was for many years about as big a cartridge as one could get in a lever gun. Newer and more modern developments rendered this cartridge obsolete by the 1930s when it was discontinued. This cartridge has made a comeback in recent years on the Black Powder Cartridge Silhouette circuit. Being originally a black powder cartridge, Lyman recommends the exclusive use of cast bullets. The 45-90 case is essentially a 45-70 case lengthened from 2.100" to 2.400". Tests in Lyman's ballistic lab showed an increase of around 200 feet per second over the 45-70 with Lyman cast bullet #457643.

***This data is intended only for new or recently manufactured guns recommended for smokeless powder.***

**This data is not for use in antique rifles originally made for black powder.**

**Test Components:**

Cases . . . . . .Buffalo Arms
Trim-to Length . . . . . .2.390"
Primers . . . . . .Remington 9½
Primer Size . . . . . .Large Rifle
Lyman Shell Holder . . . . . .No. 17
Cast Bullets Used . . . . . .(sized to .458" dia)
#457124, 385 gr.
#457643, 400 gr.
#457125, 500 gr.
#457132, 535 gr.

**Test Specifications:**
**(Velocity & Pressure)**

Firearm Used . . . . . .Universal Receiver
Barrel Length . . . . . .29½"
Twist . . . . . .1-20"
Groove Dia. . . . . .4565"

**#457124**
385 gr. (#2 Alloy) 2.850" OAL
**BC:** .299
**SD:** .262

| Powder | Sugg Starting Grains | Velocity fps | Pressure C.U.P. | Max Load Grains | Velocity fps | Pressure C.U.P. |
|---|---|---|---|---|---|---|
| SR-4759 | 33.0 | 1675 | 15,400 | 36.5 | 1826 | 24,000 |
| **XMP-5744** | **36.0** | **1568** | **13,700** | 44.5 | 1866 | 24,400 |
| IMR-4198 | 47.0 | 1861 | 19,400 | 51.7 | 2070 | 26,800 |
| RX7 | 51.0 | 1944 | 18,800 | 57.0 | 2117 | 24,900 |
| H-322 | 49.0 | 1685 | 15,300 | 61.0 | 2134 | 25,900 |
| Varget | 55.0 | 1636 | 12,800 | 65.0+ | 2071 | 25,000 |

**#457125**
500 gr. (#2 Alloy) 3.210" OAL
**BC:** .391
**SD:** .340

| Powder | Sugg Starting Grains | Velocity fps | Pressure C.U.P. | Max Load Grains | Velocity fps | Pressure C.U.P. |
|---|---|---|---|---|---|---|
| SR-4759 | 33.5 | 1480 | 17,400 | 37.0 | 1590 | 25,100 |
| **XMP-5744** | **39.0** | **1526** | **18,600** | 43.0 | 1667 | 26,600 |
| IMR-4198 | 42.0 | 1589 | 17,900 | 48.0 | 1770 | 25,600 |
| RX7 | 46.0 | 1579 | 15,200 | 50.5 | 1772 | 24,800 |

**#457643**
400 gr. (#2 Alloy) 2.800" OAL
**BC:** .280
**SD:** .272

| Powder | Sugg Starting Grains | Velocity fps | Pressure C.U.P. | Max Load Grains | Velocity fps | Pressure C.U.P. |
|---|---|---|---|---|---|---|
| **SR-4759** | 31.0 | 1611 | 21,700 | **35.0** | **1746** | **26,300** |
| XMP-5744 | 38.0 | 1637 | 22,900 | 42.5 | 1782 | 26,600 |
| IMR-4198 | 38.0 | 1611 | 16,800 | 49.5 | 1948 | 26,800 |
| RX7 | 40.0 | 1626 | 16,000 | 51.0 | 1957 | 25,500 |

**#457132**
535 gr. (20 to 1) 3.300" OAL
**BC:** .402
**SD:** .364

| Powder | Sugg Starting Grains | Velocity fps | Pressure C.U.P. | Max Load Grains | Velocity fps | Pressure C.U.P. |
|---|---|---|---|---|---|---|
| SR-4759 | 35.0 | 1519 | 21,800 | 36.5 | 1546 | 25,600 |
| **XMP-5744** | **40.0** | **1542** | **21,800** | 43.0 | 1633 | 25,400 |
| IMR-4198 | 40.0 | 1496 | 16,200 | 46.5 | 1699 | 24,900 |
| RX7 | 44.0 | 1569 | 19,200 | 48.5 | 1707 | 25,500 |

**Note:** Loads shown in shaded panels are maximum.
Loads shown in bold designate potentially most accurate load.
\+ Designates a compressed powder charge.

# 45-100-2 6/10 (45-100 Sharps)

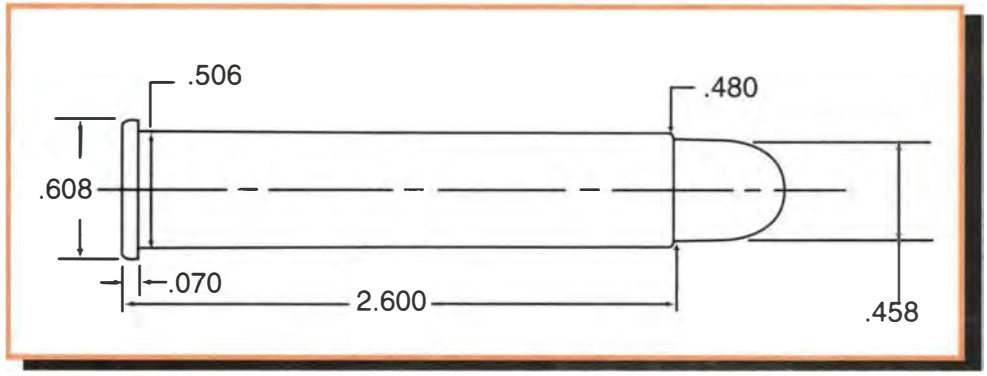


**Comments:**

This cartridge has been known under different designations with the primary difference being bullet weights and powder charges. The 45-100 saw limited use during the late 1870s before the demise of the Sharps Rifle Company. Renewed interest in Black Powder Cartridge Silhouette shooting have revived this number to an extent. Test results of the 45-100 in Lyman's ballistic lab showed little or no gain in velocity compared to the 45-90 due to the differing capacities of the parent cases. The 45-100 cases utilized here are based on unformed full-length 348 Winchester brass while cases used in our 45-90 data were a 45-70 case lengthened by .300". Loading the 45-100 is no different than for the 45-70. However, extreme care should be taken not to allow excessive amounts of case lubricant build upon the mid-section of the case during full-length resizing. The thin walls of this case are particularly prone to lube dents in this area. For best results, apply lube by hand — sparingly — to the neck area and lower portion of the case. If lube dents do occur, the inside of the full-length sizing body should be thoroughly cleaned with solvent before sizing additional cases.

***Data listed here is intended for modern, new production guns intended for use with smokeless powder.***

**This data is not for use in antique rifles originally made for black powder.**

**Test Components:**

Cases . . . . . .Buffalo Arms
Trim-to Length . . . . . .2.600"
Primers . . . . . .Remington 9½ Magnum
Primer Size . . . . . .Large Rifle, Magnum
Lyman Shell Holder . . . . . .No. 17
Cast Bullets Used . . . . . .(sized to .458" dia)
#457193, 405 gr.
#457125, 500 gr.
#457658, 500 gr.
#457132, 535 gr.

**Test Specifications: (Velocity & Pressure)**

Firearm Used . . . . . .Universal Receiver
Barrel Length . . . . . .29½
Twist . . . . . .1-20"
Groove Dia. . . . . .4565"

**#457193** — 405 gr. (#2 Alloy) 3.040" OAL — **BC:** .307 **SD:** .276

| Powder | Sugg Starting Grains | Velocity fps | Pressure C.U.P. | Max Load Grains | Velocity fps | Pressure C.U.P. |
|---|---|---|---|---|---|---|
| SR-4759 | 29.0 | 1566 | 18,100 | 33.0 | 1724 | 26,600 |
| **XMP-5744** | **36.0** | **1622** | **19,000** | 40.0 | 1782 | 26,700 |
| IMR-4198 | 38.0 | 1636 | 19,000 | 43.0 | 1846 | 26,700 |
| RX7 | 38.0 | 1620 | 17,900 | 43.0 | 1830 | 26,000 |

**#457125** — 500 gr. (#2 Alloy) 3.420" OAL — **BC:** .391 **SD:** .340

| Powder | Sugg Starting Grains | Velocity fps | Pressure C.U.P. | Max Load Grains | Velocity fps | Pressure C.U.P. |
|---|---|---|---|---|---|---|
| **SR-4759** | 30.0 | 1454 | 21,600 | **34.0** | **1556** | **27,500** |
| XMP-5744 | 36.0 | 1479 | 20,100 | 40.0 | 1646 | 27,000 |
| IMR-4198 | 39.0 | 1610 | 20,700 | 43.0 | 1721 | 27,200 |
| RX7 | 39.0 | 1499 | 18,800 | 43.5 | 1640 | 27,200 |

**#457658** — 500 gr. (20 to 1) 3.525" OAL — **BC:** .372 **SD:** .340

| Powder | Sugg Starting Grains | Velocity fps | Pressure C.U.P. | Max Load Grains | Velocity fps | Pressure C.U.P. |
|---|---|---|---|---|---|---|
| SR-4759 | 32.5 | 1514 | 21,600 | 36.5 | 1621 | 26,300 |
| XMP-5744 | 38.0 | 1541 | 18,900 | 43.0 | 1677 | 25,600 |
| IMR-4198 | 43.0 | 1614 | 17,500 | 48.0 | 1787 | 26,000 |
| **RX7** | **47.0** | **1672** | **20,500** | 52.0 | 1829 | 26,600 |
| XMR-2015 | 50.0 | 1614 | 19,000 | 56.0 | 1775 | 25,000 |

**#457132** — 535 gr. (20 to 1) 3.550" OAL — **BC:** .402 **SD:** .364

| Powder | Sugg Starting Grains | Velocity fps | Pressure C.U.P. | Max Load Grains | Velocity fps | Pressure C.U.P. |
|---|---|---|---|---|---|---|
| **XMP-5744** | **36.0** | **1479** | **20,300** | 40.0 | 1632 | 27,900 |
| IMR-4198 | 36.5 | 1450 | 20,500 | 40.5 | 1633 | 27,500 |
| RX7 | 39.0 | 1481 | 16,200 | 47.0 | 1726 | 25,700 |

**Note:** Loads shown in shaded panels are maximum.
Loads shown in bold designate potentially most accurate load.

# 45-110-2⅞ (45-110 Sharps)

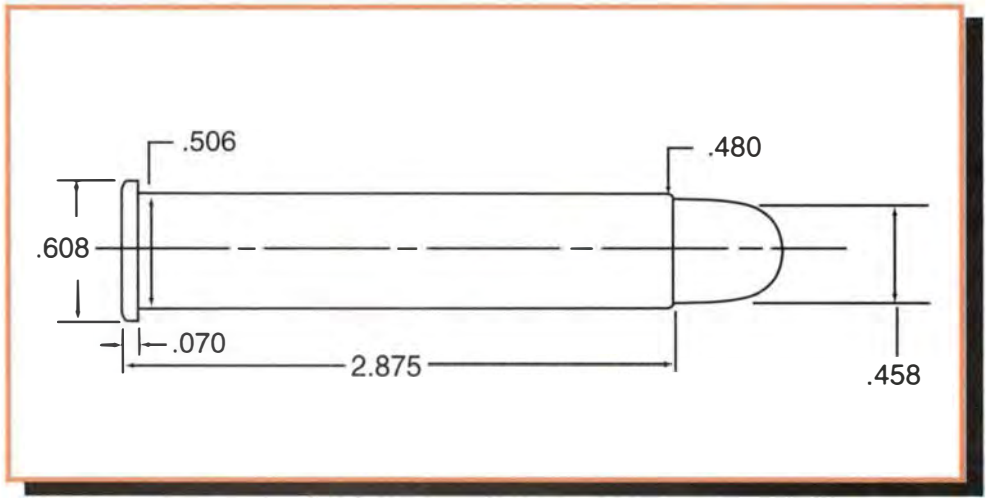


**Comments:**

This is another circa 1870s black powder cartridge that has gained some nostalgia appeal in recent years. The same procedures for resizing and loading the 45-100 are applicable here. The cases used in our lab tests were based on unformed, full-length 348 Winchester cases provided by Buffalo Arms of Sand Point, ID. Refer to the previous comments section for the 45-100 for information regarding resizing these cases. Lab results show a velocity gain of 125 to 175 feet per second over the 45-100.

***This data is intended for use modern, newly manufactured guns rated for smokeless powder.***

**This data is not for use in antique guns originally built for black powder.**

**Test Components:**

Cases . . . . . .Buffalo Arms
Trim-to Length . . . . . .2.865"
Primers . . . . . .Remington 9½ M
Primer Size . . . . . .Large Rifle, Magnum
Lyman Shell Holder . . . . . .No. 17
Cast Bullets Used . . . . . .(sized to .458" dia)
#457193, 405 gr.
#457125, 500 gr.
#457132, 535 gr.

**Test Specifications: (Velocity & Pressure)**

Firearm Used . . . . . .Universal Receiver
Barrel Length . . . . . .30"
Twist . . . . . .1-20"
Groove Dia. . . . . .4565"

**#457193** — 405 gr. (#2 Alloy) 3.320" OAL — **BC:** .307 **SD:** .276

| Powder | Sugg Starting Grains | Velocity fps | Pressure C.U.P. | Max Load Grains | Velocity fps | Pressure C.U.P. |
|---|---|---|---|---|---|---|
| SR-4759 | 34.0 | 1578 | 14,200 | 42.5 | 1875 | 27,000 |
| XMP-5744 | 38.0 | 1562 | 15,900 | 50.0 | 1911 | 26,900 |
| **IMR-4198** | **40.0** | **1610** | **14,000** | 53.0 | 1969 | 24,000 |
| RX7 | 46.0 | 1585 | 10,400 | 60.0 | 2070 | 23,000 |

**#457132** — 535 gr. (20 to 1) 3.730" OAL — **BC:** .402 **SD:** .364

| Powder | Sugg Starting Grains | Velocity fps | Pressure C.U.P. | Max Load Grains | Velocity fps | Pressure C.U.P. |
|---|---|---|---|---|---|---|
| **SR-4759** | **36.0** | **1470** | **17,200** | 40.5 | 1600 | 26,900 |
| XMP-5744 | 40.0 | 1473 | 16,500 | 46.0 | 1712 | 26,300 |
| IMR-4198 | 42.5 | 1526 | 15,000 | 53.0 | 1805 | 26,700 |
| XMR-2015 | 50.0 | 1539 | 15,900 | 57.5 | 1761 | 24,200 |

**#457125** — 500 gr. (#2 Alloy) 3.750" OAL — **BC:** .391 **SD:** .340

| Powder | Sugg Starting Grains | Velocity fps | Pressure C.U.P. | Max Load Grains | Velocity fps | Pressure C.U.P. |
|---|---|---|---|---|---|---|
| SR-4759 | 38.0 | 1524 | 18,400 | 42.0 | 1642 | 25,600 |
| **XMP-5744** | **43.0** | **1569** | **18,200** | 49.5 | 1746 | 25,600 |
| IMR-4198 | 45.0 | 1569 | 14,700 | 53.0 | 1817 | 26,000 |
| RX7 | 45.0 | 1526 | 15,500 | 59.0 | 1880 | 26,900 |
| XMR-2015 | 49.0 | 1532 | 14,400 | 60.0 | 1829 | 24,500 |

**Note:** Loads shown in shaded panels are maximum.
Loads shown in bold designate potentially most accurate load.

# 45-120-3¼ (45-120 Sharps)

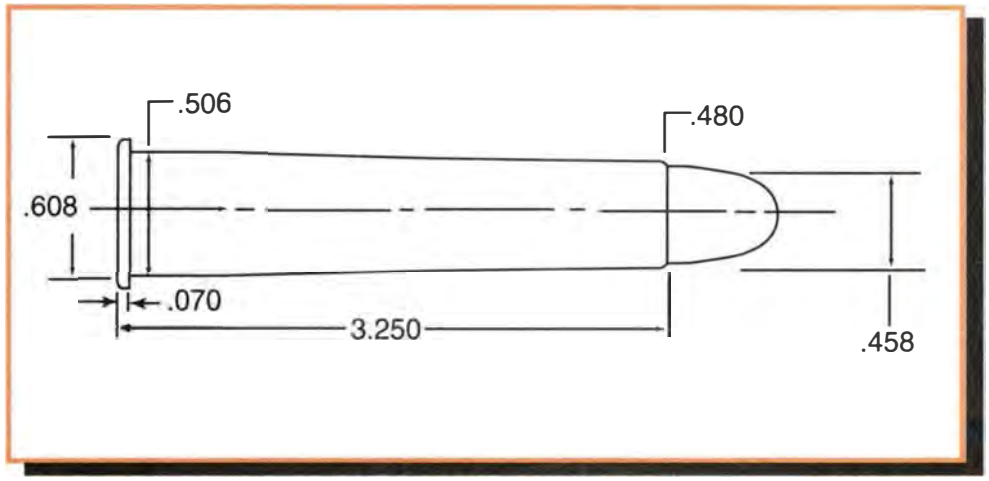


**Comments:**

This is yet another old-timer revived by the current popularity of Black Powder Cartridge Silhouette Shooting. This cartridge came on to the scene around 1879 shortly before the demise of the Sharps Rifle Company. Although widely considered one of the great buffalo cartridges, its exact history has been the subject of some debate. Many rifles from both domestic and foreign sources have come on to the market in recent years. Some of our consumer correspondence indicates that some rifles made overseas have groove diameters as small as .456". The 45-120 was originally designed to be loaded with compressed black powder and cast lead bullets. It is a very large case that operates at relatively low pressures. These circumstances limit the number of smokeless powders suitable for loading this cartridge. Those looking for a good first powder choice should try Accurate Arms XMP-5744. Accurate Arms formulated this propellant specifically for reduced loads and large cases such as the old Sharps cartridges. Shooters should slug their bores and size bullets accordingly.

***This data is intended for newly manufactured guns rated for smokeless powder.***

**This data is not intended for use in antique guns originally built for black powder.**

**Test Components:**

Cases . . . . . .Bertram
Trim-to Length . . . . . .3.240"
Primers . . . . . .Federal 215M
Primer Size . . . . . .Large Rifle Magnum
Lyman Shell Holder . . . . . .No. 17
Cast Bullets Used . . . . . .(sized to .459" dia)
#457125, 500 gr.
#457658, 500 gr.
#457132, 535 gr.

**Test Specifications: (Velocity & Pressure)**

Firearm Used . . . . . .Universal Receiver
Barrel Length . . . . . .26"
Twist . . . . . .1-20"
Groove Dia. . . . . .458"

**#457125** 500 gr. (#2 Alloy) 3.960" OAL — **BC:** .391 **SD:** .339

| Powder | Sugg Starting Grains | Velocity fps | Pressure C.U.P. | Max Load Grains | Velocity fps | Pressure C.U.P. |
|---|---|---|---|---|---|---|
| SR-4759 | 32.0 | 1383 | 18,000 | 36.5 | 1534 | 23,000 |
| **XMP-5744** | **39.0** | **1532** | **18,300** | 44.0 | 1648 | 22,200 |
| IMR-4350 | 60.0 | 1562 | 19,500 | 66.5 | 1752 | 27,800 |

**#457658** 500 gr. (20 to 1) 4.125" OAL — **BC:** .372 **SD:** .339

| Powder | Sugg Starting Grains | Velocity fps | Pressure C.U.P. | Max Load Grains | Velocity fps | Pressure C.U.P. |
|---|---|---|---|---|---|---|
| **SR-4759** | **36.0** | **1476** | **21,200** | 40.0 | 1588 | 24,000 |
| XMP-5744 | 41.0 | 1576 | 22,700 | 46.0 | 1712 | 25,800 |

**#457132** 535 gr. (20 to 1) 4.030" OAL — **BC:** .402 **SD:** .363

| Powder | Sugg Starting Grains | Velocity fps | Pressure C.U.P. | Max Load Grains | Velocity fps | Pressure C.U.P. |
|---|---|---|---|---|---|---|
| XMP-5744 | 39.0 | 1495 | 21,300 | 43.5 | 1639 | 23,700 |

**Note:** Loads shown in shaded panels are maximum.
Loads shown in bold designate potentially most accurate load.

# 458 Winchester Magnum

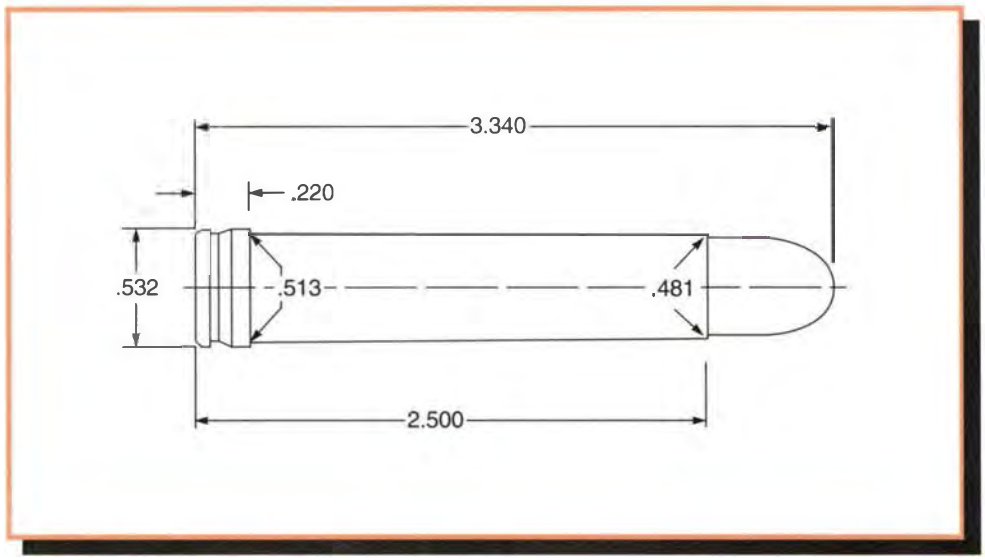


**Comments:**

Winchester threw its hat into the belted Magnum ring in 1956 with the 458. The cartridge has made a name for itself since then on the most dangerous game in Africa and around the world. The 458 Magnum has also developed a reputation for punishing recoil. Fortunately, it is a flexible cartridge which responds well to handloading. Shooters can load 500-grain bullets to full power or download it to 45-70 levels. Those loading the 458 should heed several cautions. Many maximum loads are heavily compressed. Use of Reloder 7 can minimize difficulties with powder compression, particularly with the long 500-grain bullets. Seating and crimping are best done in two separate operations to avoid crushed cases. Proper alignment of case mouth and bullet cannelure is crucial. Use of lighter weight bullets turn the 458 into a potent brush cartridge for much of North America.

**Test Components:**

Cases . . . . . .Winchester
Trim-to Length . . . . . .2.490"
Primers . . . . . .Winchester WLR and WLRM
Primer Size . . . . . .Large Rifle, Standard and Magnum
Lyman Shell Holder . . . . . .No. 13
Jacketed Bullets Used . . . . .Sierra FN #8900, 300 gr.
Speer SP #2478, 350 gr.
Remington SP #B22899, 405 gr.
Barnes X #45818, 450 gr.
Hornady RN #4504, 500 gr.
Cast Bullets Used . . . . . .(sized to .459" dia)
*gas check bullet #457191, 292 gr.
#457124, 385 gr.
*#457671, 475 gr.

**Test Specifications:**
**(Velocity & Pressure)**

Firearm Used . . . . . .Winchester Model 70
Ruger No.1
Universal Receiver
Barrel Length . . . . . .Model 70; 22"
Ruger No.1; 24"
Universal Receiver; 24"
Twist . . . . . .1-14"
Groove Dia. . . . . .Model 70: .457"
Ruger No.1: .459"
Universal Receiver: .457"

*** 300 gr. Jacketed FN** — 2.940" OAL — **BC:** .120 **SD:** .204

| Powder | Sugg Starting Grains | Velocity fps | Pressure C.U.P. | Max Load Grains | Velocity fps | Pressure C.U.P. |
|---|---|---|---|---|---|---|
| N130 | 72.0 | 2590 | 39,600 | 78.0 | 2789 | 52,900 |
| **IMR-4198** | 58.0 | 2265 | 28,800 | **63.0** | **2514** | **45,600** |
| XMR-2015 | 70.0 | 2386 | 35,600 | 74.5+ | 2464 | 40,400 |
| RX7 | 69.0 | 2563 | 33,700 | 75.0+ | 2757 | 52,400 |
| IMR-3031 | 66.0 | 2133 | 20,100 | 72.0+ | 2391 | 31,500 |
| H-322 | 74.0 | 2536 | 35,700 | 81.0+ | 2723 | 52,700 |

*** 350 gr. Jacketed SP** — 3.105" OAL — **BC:** .232 **SD:** .238

| Powder | Sugg Starting Grains | Velocity fps | Pressure C.U.P. | Max Load Grains | Velocity fps | Pressure C.U.P. |
|---|---|---|---|---|---|---|
| N130 | 69.0 | 2394 | 42,900 | 74.7 | 2550 | 52,700 |
| IMR-4198 | 61.0 | 2287 | 43,100 | 66.3 | 2441 | 52,700 |
| XMR-2015 | 72.0 | 2306 | 37,900 | 79.0+ | 2528 | 52,500 |
| RX7 | 68.0 | 2350 | 41,600 | 74.0+ | 2529 | 52,700 |
| IMR-3031 | 69.0 | 2158 | 30,300 | 74.0+ | 2353 | 42,200 |
| **H-322** | **73.0** | **2354** | **37,700** | 80.0+ | 2550 | 52,800 |

**Note:** Loads shown in shaded panels are maximum.
Loads shown in bold designate potentially most accurate load.
+ Designates a compressed powder charge.
* Designates use of magnum primers.

# 458 Winchester Magnum

**†† 405 gr. Jacketed SP**
3.090" OAL
**BC:** .281
**SD:** .276

| Powder | Sugg Starting Grains | Velocity fps | Pressure | Max Load Grains | Velocity fps | Pressure |
|---|---|---|---|---|---|---|
| **IMR-3031** | 64.0 | 2036 | — | **71.0+** | **2237** | — |
| IMR-4895 | 67.0 | 1988 | — | 75.0+ | 2217 | — |
| H-335 | 74.0 | 1815 | — | 80.0+ | 1984 | — |
| IMR-4064 | 67.0 | 1949 | — | 74.0+ | 2127 | — |
| BL-C (2) | 71.0 | 1733 | — | 77.0+ | 1919 | — |
| IMR-4320 | 69.0 | 1988 | — | 77.0+ | 2247 | — |
| H-380 | 72.0 | 1897 | — | 80.0+ | 2016 | — |

*** 450 gr. Barnes X**
3.280" OAL
**BC:** .488
**SD:** .306

| Powder | Sugg Starting Grains | Velocity fps | Pressure | Max Load Grains | Velocity fps | Pressure |
|---|---|---|---|---|---|---|
| IMR-4198 | 49.0 | 1803 | 41,500 | 53.5 | 1948 | 52,800 |
| XMR-2015 | 58.0 | 1844 | 36,200 | 63.3+ | 2034 | 52,400 |
| RX7 | 55.0 | 1903 | 36,600 | 59.5 | 2052 | 52,600 |
| IMR-3031 | 60.0 | 1875 | 41,600 | 65.0+ | 2052 | 52,800 |
| IMR-4895 | 61.0 | 1852 | 40,600 | 67.0+ | 2026 | 53,000 |
| H-335 | 68.0 | 1935 | 36,200 | 74.3+ | 2159 | 53,000 |
| **N135** | **63.0** | **1979** | **43,700** | 68.5+ | 2124 | 52,700 |

**500 gr. Jacketed RN**
3.340" OAL
**BC:** .287
**SD:** .341

| Powder | Sugg Starting Grains | Velocity fps | Pressure C.U.P. | Max Load Grains | Velocity fps | Pressure C.U.P. |
|---|---|---|---|---|---|---|
| **†† RX7** | **60.0** | **1709** | — | 65.0+ | 1937 | — |
| †† IMR-3031 | 62.0 | 1890 | — | 69.0+ | 2053 | — |
| †† IMR-4895 | 66.0 | 1886 | — | 73.0+ | 2066 | — |
| †† H-335 | 73.0 | 1821 | — | 76.0+ | 2000 | — |
| †† IMR-4064 | 64.0 | 1785 | — | 71.0+ | 1968 | — |
| †† BL-C(2) | 70.0 | 1736 | — | 75.0+ | 1912 | — |
| †† IMR-4320 | 67.0 | 1858 | — | 75.0+ | 2066 | — |
| **SR-4759 | 30.0 | 1216 | 18,000 | 34.5 | 1384 | 25,200 |
| **XMP-5744 | 34.0 | 1212 | 16,000 | 39.5 | 1380 | 22,180 |

**††† #457191**
292 gr. (#2 Alloy) 2.995" OAL
**BC:** .201
**SD:** .198

| Powder | Sugg Starting Grains | Velocity fps | Pressure | Max Load Grains | Velocity fps | Pressure |
|---|---|---|---|---|---|---|
| Unique | 19.0 | 1460 | — | 23.0 | 1625 | — |
| 2400 | 28.0 | 1585 | — | 33.0 | 1765 | — |
| SR-4759 | 32.0 | 1499 | — | 36.5 | 1762 | — |
| IMR-4227 | 44.5 | 2100 | — | 50.5 | 2305 | — |
| XMP-5744 | 37.0 | 1530 | — | 42.5 | 1744 | — |
| IMR-4198 | 54.0 | 2135 | — | 58.0 | 2205 | — |
| **IMR-3031** | **60.0** | **1885** | — | 69.0 | 2220 | — |
| IMR-4064 | 64.0 | 1865 | — | 72.0 | 2110 | — |

**††† #457124**
385 gr. (#2 Alloy) 3.012" OAL
**BC:** .299
**SD:** .261

| Powder | Sugg Starting Grains | Velocity fps | Pressure | Max Load Grains | Velocity fps | Pressure |
|---|---|---|---|---|---|---|
| Unique | 18.0 | 1315 | — | 22.0 | 1510 | — |
| 2400 | 25.0 | 1310 | — | 31.0 | 1565 | — |
| **SR-4759** | **29.0** | **1431** | — | 35.5 | 1723 | — |
| IMR-4227 | 44.0 | 1935 | — | 50.0 | 2090 | — |
| XMP-5744 | 33.5 | 1431 | — | 42.0 | 1706 | — |
| IMR-4198 | 53.0 | 2010 | — | 57.0 | 2125 | — |
| IMR-3031 | 59.0 | 1900 | — | 68.0+ | 2210 | — |
| IMR-4064 | 62.0 | 1860 | — | 70.0+ | 2115 | — |

**††† #457671**
475 gr. (#2 Alloy) 3.145" OAL
**BC:** .477
**SD:** .322

| Powder | Sugg Starting Grains | Velocity fps | Pressure | Max Load Grains | Velocity fps | Pressure |
|---|---|---|---|---|---|---|
| SR-4759 | 29.0 | 1428 | — | 35.0 | 1646 | — |
| IMR-4227 | 35.5 | 1436 | — | 39.0 | 1648 | — |
| **XMP-5744** | **34.5** | **1425** | — | 40.5 | 1623 | — |
| IMR-4198 | 37.5 | 1433 | — | 41.5 | 1623 | — |

**Note:** Loads shown in shaded panels are maximum.
Loads shown in bold designate potentially most accurate load.
\+ Designates a compressed powder charge.
* Designates use of magnum primers.
†† Fired in a Model 70.
††† Fired in a Ruger No.1.
** Designates a reduced load.

# 460 Weatherby Magnum

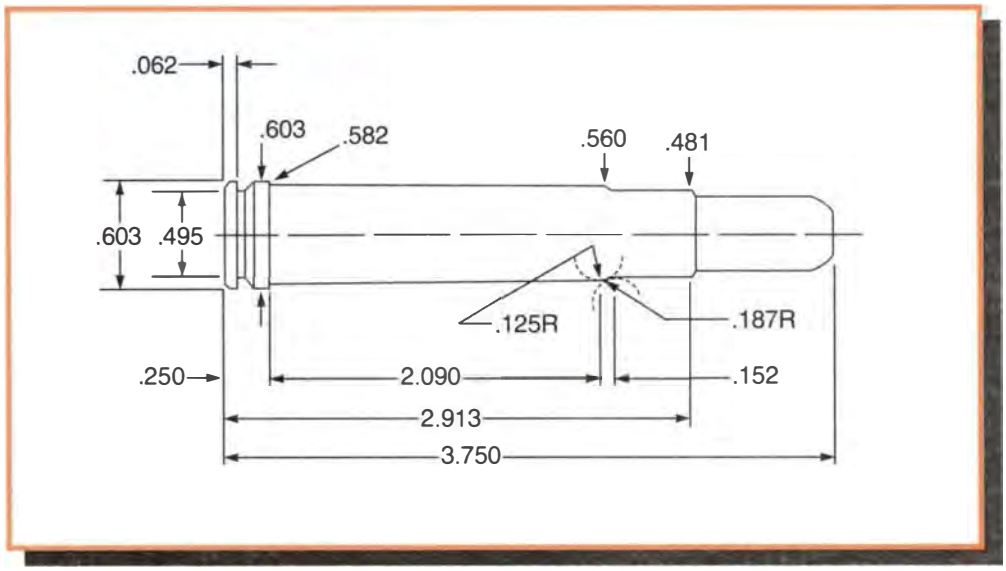


**Comments:**

The 460 Weatherby justifiably made its reputation as the last word in stopping power on dangerous game. It evolved as a necked up version of the 378 Weatherby in 1958 and was one of the earliest developments of that particular case. The 460 is designed to stop the most dangerous game on earth. By all accounts it does this very well. It's not especially useful for North America save maybe certain Alaskan situations but is a fun gun to shoot the first time around. Weatherby recommends the use of Federal 215 Magnum primers for all jacketed bullets. This data is intended for commercially produced and chambered rifles. It is not for use in custom guns that may lack the free bore found in standard Weatherby chambers.

**Test Components:**

Cases . . . . . .Weatherby
Trim-to Length . . . . . .2.903"
Primers . . . . . .Federal 215 & 210
Primer Size . . . . . .Large Rifle, Magnum & Standard
Lyman Shell Holder . . . . . .No. 17
Jacketed Bullets Used. . .Remington SP #B22899, 405 gr.
Hornady RN #4504, 500 gr.
Cast Bullets Used . . . . . .(sized to .458" dia)
*gas check bullet *#457671, 475 gr.
#457125, 500 gr.

**Test Specifications: (Velocity Only)**

Firearm Used . . . . . .Weatherby Mk V
Barrel Length . . . . . .26"
Twist . . . . . .1-16"
Groove Dia. . . . . .458"

**405 gr. Jacketed SP** — 3.485" OAL — BC: .281 SD: .276

| Powder | Sugg Starting Grains | Velocity fps | Pressure | Max Load Grains | Velocity fps | Pressure |
|---|---|---|---|---|---|---|
| **SR-4759** | 49.0 | 1868 | — | **58.0** | **2101** | — |
| XMP-5744 | 56.0 | 1856 | — | 65.0 | 2091 | — |
| IMR-4198 | 57.0 | 1865 | — | 69.0 | 2159 | — |

***#457671** — 475 gr. (#2 Alloy) 3.700" OAL — BC: .477 SD: .323

| Powder | Sugg Starting Grains | Velocity fps | Pressure | Max Load Grains | Velocity fps | Pressure |
|---|---|---|---|---|---|---|
| SR-4759 | 46.0 | 1717 | — | 56.0 | 2006 | — |
| **XMP-5744** | **50.0** | **1700** | — | 63.5 | 2039 | — |
| RX7 | 57.5 | 1686 | — | 69.5 | 2015 | — |

**500 gr. RN** — 3.710" OAL — BC: .287 SD: .341

| Powder | Sugg Starting Grains | Velocity fps | Pressure | Max Load Grains | Velocity fps | Pressure |
|---|---|---|---|---|---|---|
| H-414 | 110.0 | 2372 | — | 116.0 | 2494 | — |
| IMR-4350 | 117.0 | 2545 | — | 123.0+ | 2682 | — |
| XMR-4350 | 114.0 | 2401 | — | 120.0+ | 2506 | — |
| **RX19** | **118.0** | **2521** | — | 124.0+ | 2647 | — |
| H-4831SC | 119.0 | 2380 | — | 126.0+ | 2500 | — |
| AA8700 | 128.0+ | 2004 | — | 135.0+ | 2119 | — |
| **SR-4759 | 50.0 | 1720 | — | 59.0 | 1922 | — |
| **XMP-5744 | 56.0 | 1706 | — | 65.0 | 1936 | — |

***#457125** — 500 gr. (#2 Alloy) 3.650" OAL — BC: .391 SD: .340

| Powder | Sugg Starting Grains | Velocity fps | Pressure | Max Load Grains | Velocity fps | Pressure |
|---|---|---|---|---|---|---|
| SR-4759 | 46.0 | 1701 | — | 57.5 | 1959 | — |
| **XMP-5744** | **52.0** | **1702** | — | 62.5 | 1958 | — |
| RX7 | 61.0 | 1745 | — | 68.0 | 1956 | — |

**Note:** Loads shown in shaded panels are maximum. Loads shown in bold designate potentially most accurate load.

+ Designates a compressed powder charge.
* Designates the use of 210 primers.
**Designates a reduced load.

# 50-70 Government

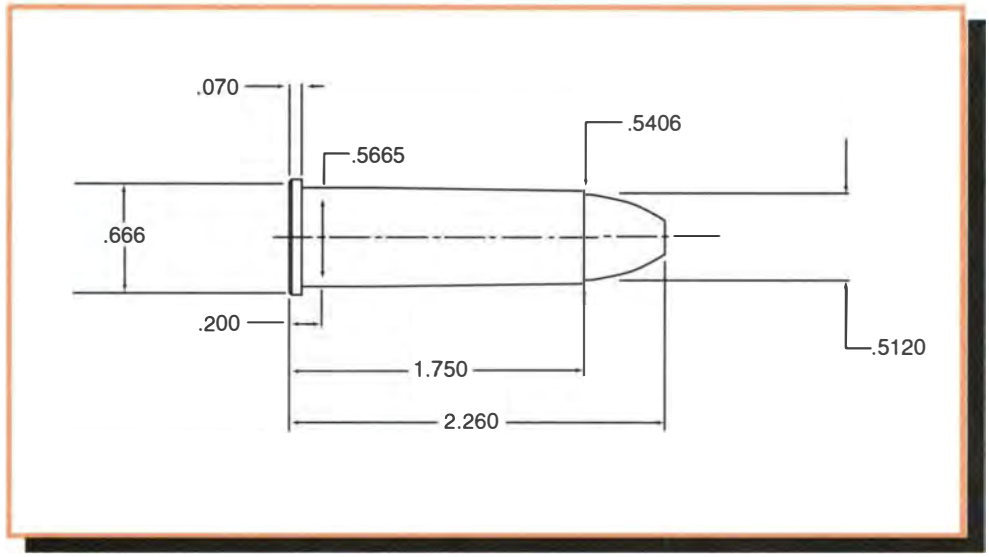


**Comments:**

The 50-70 Government led a short military career as the first general issue center-fire rifle cartridge in U.S. Army service. It served from 1866 until its replacement by the 45-70 in 1873. The 50-70 enjoyed fairly wide spread post-military usage throughout the remainder of the nineteenth century. The cartridge is most commonly encountered in rolling blocks and reportedly saw extensive use during the buffalo hunts of the late 1870s. The 50-70 has made a bit of a comeback recently among black powder cartridge aficionados.

***This data applies only to modern, brass cases of recent manufacture. Do not use any old balloon head cases. This data is for use in newly manufactured replica rifles approved for smokeless powder. This data is not for use in antique firearms originally designed for black powder.***

**Test Components:**

Cases . . . . . .Bell
Trim-to Length . . . . . .1.740"
Primers . . . . . .Federal 215
Primer Size . . . . . .Large Rifle, Magnum
Lyman Shell Holder . . . . . .No. 22
Cast Bullets Used . . . . . .(sized to .511" dia)
#515141, 425 gr.

**Test Specifications:**
**(Velocity Only)**

Firearm Used . . . . . .Shiloh Sharps
Barrel Length . . . . . .22"
Twist . . . . . .1-48"
Groove Dia. . . . . .511"

**#515141**
425 gr. (#2 Alloy) 2.312" OAL
**BC:** .250
**SD:** .232

| Powder | Sugg Starting Grains | Velocity fps | Pressure | Max Load Grains | Velocity fps | Pressure |
|---|---|---|---|---|---|---|
| Unique | 11.0 | 1003 | — | 14.8 | 1211 | — |
| SR-4759 | 22.0 | 1114 | — | 26.5 | 1313 | — |
| IMR-4227 | 22.0 | 1102 | — | 27.3 | 1333 | — |
| IMR-4198 | 25.5 | 1129 | — | 30.0 | 1305 | — |

**Note:** Loads shown in shaded panels are maximum.
Loads shown in **bold** designate potentially most accurate load.

# 25 Automatic (25 ACP)

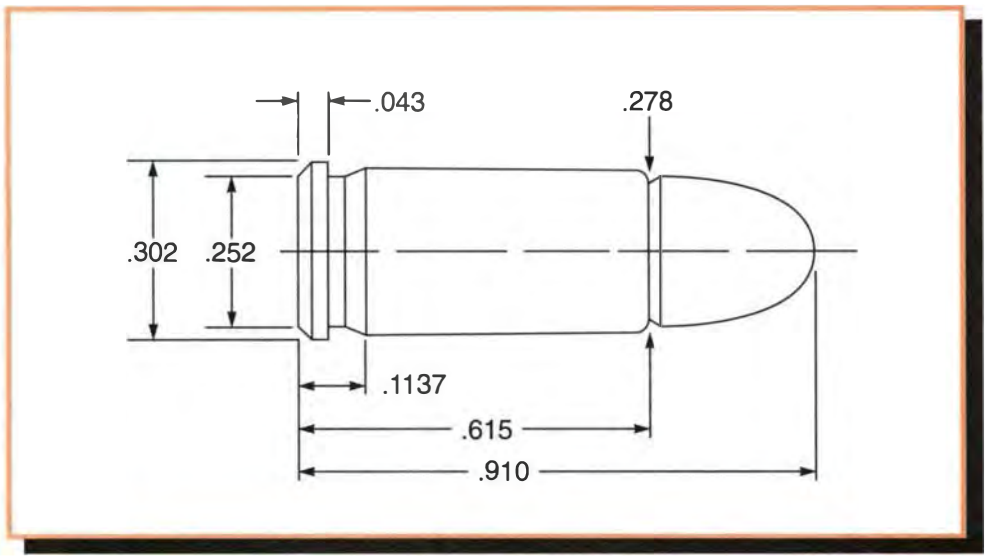


**Comments:**

The 25 ACP (Automatic Colt Pistol) came to prominence to American shooters in the Colt Vest Pocket pistol designed by none other than John M. Browning. This cartridge owes much of its popularity to the small size of the pistols chambered for it rather than its ballistics. Its marginal performance as a defensive round has drawn the ridicule of numerous gun writers over the years. The 25 ACP is most commonly encountered today through pocket pistols imported from overseas from sources such as Beretta. It has never been widely regarded as a handloader's cartridge and bullet selection is not extensive. Charge weights for the 25 ACP are quite small. Shooters should take care not to accidentally double-charge cases with powder. The 25 ACP case is semi-rimmed and can be lightly roll crimped. Bullseye and 231 are preferred powders.

**Test Components:**

Cases . . . . . .Remington
Trim-to Length . . . . . ..610"
Primers . . . . . .Winchester WSP
Primer Size . . . . . .Small Pistol
Lyman Shell Holder . . . . . .No. 32
Jacketed Bullets Used . . .Hornady HP #35450, 35 gr.
Hornady FMJ #3545, 50 gr.

**Test Specifications:**
**(Velocity & Pressure)**

Firearm Used . . . . . .Universal Receiver
Barrel Length . . . . . .2"
Twist . . . . . .1-16"
Groove Dia. . . . . .251"

**35 gr. Jacketed HP** — .860" OAL — BC: .072 SD: .079

| Powder | Sugg Starting Grains | Velocity fps | Pressure C.U.P. | Max Load Grains | Velocity fps | Pressure C.U.P. |
|---|---|---|---|---|---|---|
| **Bullseye** | **1.3** | **751** | — | 1.5 | 863 | — |
| Red Dot | 1.2 | 774 | — | 1.4 | 955 | — |
| 700X | 1.3 | 766 | — | 1.5 | 938 | — |
| AA#2 | 1.3 | 737 | — | 1.5 | 796 | — |
| HP-38 | 1.3 | 641 | — | 1.5 | 923 | — |
| 231 | 1.3 | 768 | — | 1.5 | 807 | — |

**50 gr. Jacketed FMC** — .900" OAL — BC: .116 SD: .113

| Powder | Sugg Starting Grains | Velocity fps | Pressure C.U.P. | Max Load Grains | Velocity fps | Pressure C.U.P. |
|---|---|---|---|---|---|---|
| **Bullseye** | 1.0 | 558 | 11,000 | **1.4** | **754** | **17,300** |
| 231 | 1.0 | 563 | 11,800 | 1.4 | 752 | 17,800 |
| HP-38 | 0.8 | 565 | 12,200 | 1.1 | 710 | 17,500 |
| Red Dot | 1.0 | 562 | 11,800 | 1.3 | 749 | 18,100 |
| 700X | 0.8 | 556 | 11,600 | 1.1 | 743 | 18,000 |
| Unique | 1.2 | 544 | 11,000 | 1.6 | 740 | 16,700 |

**Note:** Loads shown in shaded panels are maximum.
Loads shown in bold designate potentially most accurate load.

# 30 Luger

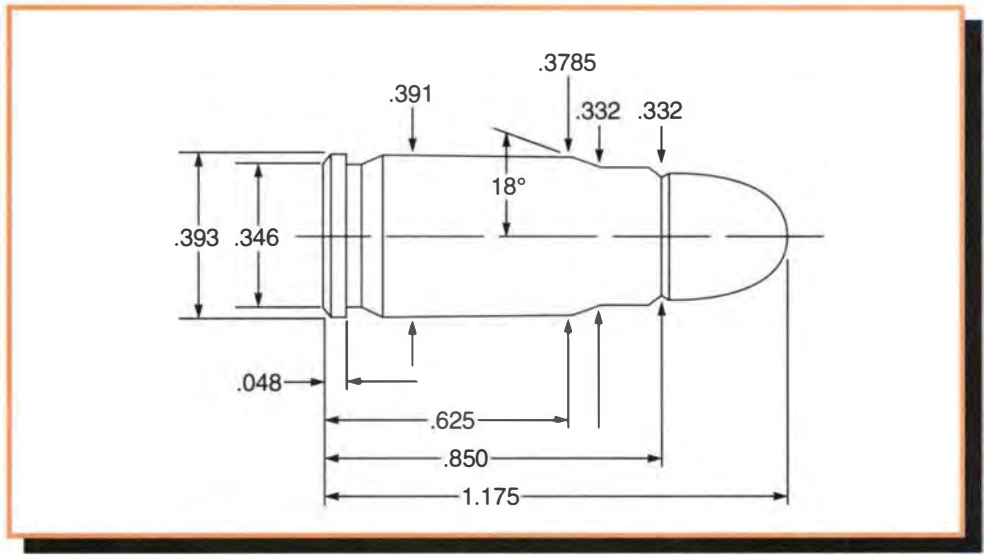


**Comments:**

Groove diameter variations are the norm in firearms chambered for this cartridge. In some handguns the starting load may not function the action. In such an instance work up the load cautiously.

For best results with cast bullets, size bullets to, or 0.001" above groove diameter. Cast bullet #313249 should be crimped on the leading edge of the first driving band.

**Test Components:**

Cases . . . . . .Remington
Trim-to Length . . . . . ..845"
Primers . . . . . .Remington 1½
Primer Size . . . . . .Small Pistol
Lyman Shell Holder . . . . . .No. 12
Jacketed Bullets Used . . . .Hornady FMJ #1419, 93 gr.
Cast Bullets Used . . . . . .(sized to .309" dia) #313249, 85 gr.

**Test Specifications: (Velocity Only)**

Firearm Used . . . . . .Walther P-38
Barrel Length . . . . . .4 15/16"
Twist . . . . . .1-9.85"
Groove Dia. . . . . .3085"

**93 gr. Jacketed FMJ** — 1.175" OAL — BC: .102 SD: .140

| Powder | Sugg Starting Grains | Velocity fps | Pressure | Max Load Grains | Velocity fps | Pressure |
|---|---|---|---|---|---|---|
| **700X** | 3.6 | 1065 | — | **4.1** | **1171** | — |
| SR-4756 | 5.0 | 1038 | — | 5.5 | 1161 | — |
| Bullseye | 3.5 | 968 | — | 4.0 | 1067 | — |
| Unique | 4.5 | 1003 | — | 5.0 | 1115 | — |
| 231 | 3.7 | 935 | — | 4.2 | 1046 | — |
| HP-38 | 3.5 | 1028 | — | 4.0 | 1115 | — |

**#313249** — 85 gr. (#2 Alloy) 1.125" OAL — BC: .212 SD: .127

| Powder | Sugg Starting Grains | Velocity fps | Pressure | Max Load Grains | Velocity fps | Pressure |
|---|---|---|---|---|---|---|
| 700X | 3.7 | 1143 | — | 4.2 | 1204 | — |
| PB | 4.0 | 1105 | — | 4.5 | 1177 | — |
| SR-4756 | 4.7 | 966 | — | 5.6 | 1182 | — |
| Bullseye | 3.8 | 1106 | — | 4.5 | 1244 | — |
| Red Dot | 3.8 | 1116 | — | 4.3 | 1201 | — |
| Green Dot | 4.2 | 1111 | — | 4.7 | 1210 | — |
| Unique | 4.6 | 1110 | — | 5.2 | 1226 | — |
| **231** | 3.9 | 1054 | — | **4.4** | **1144** | — |

**Note:** Loads shown in shaded panels are maximum.
Loads shown in bold designate potentially most accurate load.

# 7.62 Tokarev/30 Mauser

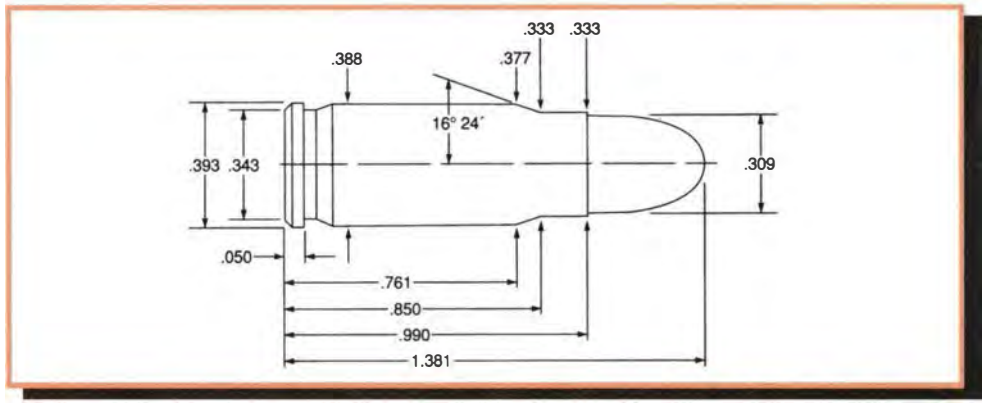


**Comments:**

The 7.62x25mm Tokarev and 30 Mauser are two different cartridges. However, their dimensions are so close that it has been common practice to use them interchangeably. The 30 Mauser had its origins in the Borchardt semiautomatic pistol developed in 1893. It became best known as the cartridge most often encountered in the Mauser C96 "Broomhandle" pistol. The Soviet Union adopted the 7.62x25 cartridge chambered in the Tokarev TT-30 during the early 1930s. The Soviets also produced large numbers of submachine guns chambered in this cartridge. The 7.62x25 became widely distributed throughout the Soviet sphere of influence during the Cold War and both pistols and ammunition have been commonplace on the U.S. market since the demise of the Eastern bloc. Much of this ammunition is useless to reloaders as it is steel cased.

Like any mass-produced military arm, groove diameters can vary. Cast bullets should be sized as close to groove diameter as possible. Make up a dummy round with a bullet of the chosen diameter to ensure the cartridge both chambers and falls freely. Bullets should be cast of a hard pistol alloy, preferably linotype. The listed starting loads may not function the action of some pistols. Do not use this data for the older 7.65 Borchardt pistol. Borchardt pistols operate at a lower chamber pressure. The Hornady bullets used in our data are available exclusively through The Old Western Scrounger, 12924 Highway A-12, Montague, CA, 96064.

**Test Components:**

Cases . . . . . .Starline
Trim-to Length . . . . . ..980"
Primers . . . . . .Remington 1½
Primer Size . . . . . .Small Pistol
Lyman Shell Holder . . . . . .No. 12
Jacketed Bullets Used . . . .Hornady FMJ #1502, 86 gr.
Hornady FMJ #1419, 93 gr.
Cast Bullets Used . . . . . .(sized to .311" dia)
#313249, 85 gr.

**Test Specifications:**
**(Velocity Only)**

Firearm Used . . . . . .Cz52
Barrel Length . . . . . .4.7"
Twist . . . . . .1-12½"
Groove Dia. . . . . ..310"

**86 gr. FMJ**
1.290" OAL
**BC:** .093
**SD:** .129

| Powder | Sugg Starting Grains | Velocity fps | Pressure | Max Load Grains | Velocity fps | Pressure |
|---|---|---|---|---|---|---|
| Bullseye | 4.8 | 1187 | — | 5.4 | 1308 | — |
| 700X | 4.6 | 1190 | — | 5.7 | 1363 | — |
| **Red Dot** | 5.0 | 1240 | — | **5.8** | **1395** | — |
| AA#2 Imp. | 4.5 | 1125 | — | 5.9 | 1368 | — |
| N320 | 4.8 | 1178 | — | 5.9 | 1375 | — |
| HP-38 | 5.0 | 1157 | — | 6.0 | 1318 | — |
| 231 | 5.0 | 1177 | — | 6.1 | 1374 | — |
| Unique | 5.0 | 1165 | — | 6.2 | 1335 | — |
| AA#5 | 6.0 | 1098 | — | 7.1 | 1278 | — |

**93 gr. FMJ**
1.310" OAL
**BC:** .102
**SD:** .140

| Powder | Sugg Starting Grains | Velocity fps | Pressure | Max Load Grains | Velocity fps | Pressure |
|---|---|---|---|---|---|---|
| Bullseye | 4.6 | 1118 | — | 5.3 | 1236 | — |
| 700X | 4.5 | 1131 | — | 5.4 | 1274 | — |
| **Red Dot** | 4.9 | 1194 | — | **5.7** | **1343** | — |
| AA#2 Imp. | 4.5 | 1077 | — | 5.8 | 1276 | — |
| N320 | 4.5 | 1074 | — | 5.8 | 1275 | — |
| HP-38 | 4.9 | 1112 | — | 6.0 | 1289 | — |
| 231 | 5.0 | 1132 | — | 6.0 | 1283 | — |
| Unique | 5.0 | 1062 | — | 6.3 | 1303 | — |
| AA#5 | 6.0 | 1042 | — | 7.1 | 1229 | — |

**#313249**
85 gr. (#2 Alloy) 1.290" OAL
**BC:** .212
**SD:** .125

| Powder | Sugg Starting Grains | Velocity fps | Pressure | Max Load Grains | Velocity fps | Pressure |
|---|---|---|---|---|---|---|
| Titegroup | 4.0 | 1222 | — | 5.0 | 1418 | — |
| Bullseye | 4.0 | 1184 | — | 5.2 | 1409 | — |
| **Red Dot** | **4.1** | **1209** | — | 5.0 | 1381 | — |
| AA#2 Imp. | 4.2 | 1221 | — | 5.2 | 1377 | — |
| HP-38 | 4.7 | 1237 | — | 5.5 | 1374 | — |
| 231 | 4.5 | 1203 | — | 5.5 | 1379 | — |
| Unique | 4.6 | 1123 | — | 6.0 | 1376 | — |

**Note:** Loads shown in shaded panels are maximum.
Loads shown in bold designate potentially most accurate load.

# 32 Automatic (32 ACP)

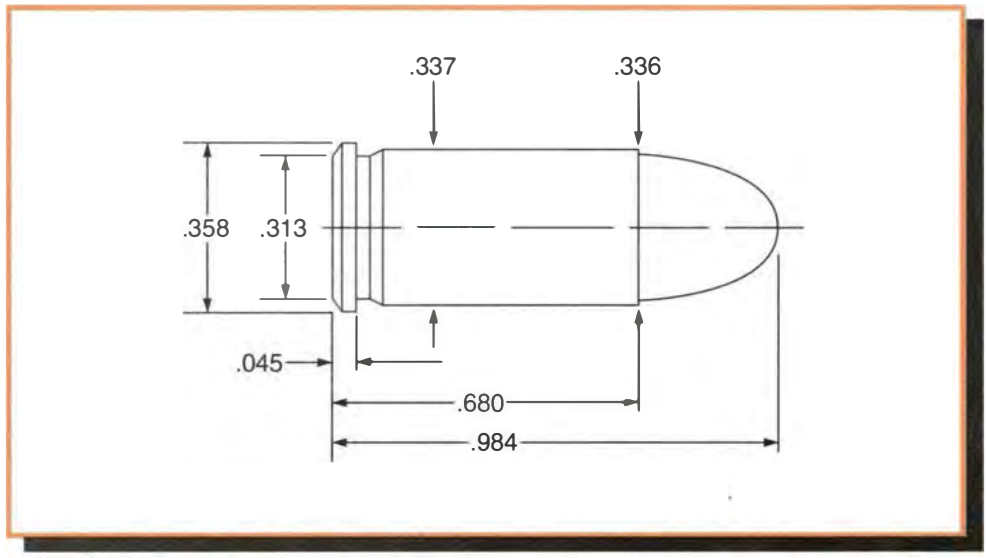


**Comments:**

The loads listed may be used with 0.311" jacketed bullets in pistols which have a groove diameter as small as 0.309 inches. Groove diameter variations are extensive in handguns chambered for this cartridge. Chamber limits make it unsafe to attempt to use larger diameter bullets, regardless of groove diameter measurement.

The very fast powders, such as Alliants Bullseye, Hodgdon HP-38, and Winchester 231 are best for this tiny cartridge.

**Test Components:**

Cases . . . . . .Remington, Winchester
Trim-to Length . . . . . ..672"
Primers . . . . . .Remington 1½, Winchester WSP
Primer Size . . . . . .Small Pistol
Lyman Shell Holder . . . . . .No. 23
Jacketed Bullets Used . . . . . .Sierra FMJ #8010, 71 gr.
Cast Bullets Used . . . . . .(sized to .309" dia) #311252, 75 gr.

**Test Specifications: (Velocity & Pressure)**

Firearm Used . . . . . .Mauser HSc Universal Receiver
Barrel Length . . . . . .Mauser; 3" Universal Receiver; 3¼"
Twist . . . . . .1-16"
Groove Dia. . . . . .309"

**71 gr. FMJ** .984" OAL — **BC:** .120 **SD:** .105

| Powder | Sugg Starting Grains | Velocity fps | Pressure C.U.P. | Max Load Grains | Velocity fps | Pressure C.U.P. |
|---|---|---|---|---|---|---|
| **700X | 1.7 | 706 | 9,500 | 2.2 | 902 | 14,700 |
| **Bullseye** | 1.5 | 603 | — | **2.2** | **825** | — |
| Red Dot | 1.7 | 705 | — | 2.5 | 937 | — |
| Unique | 2.0 | 571 | — | 3.1 | 945 | — |
| ****HP-38** | 1.7 | 733 | 11,100 | **2.2** | **883** | **14,900** |

**#311252** 75 gr. (#2 Alloy) .975" OAL — **BC:** .121 **SD:** .112

| Powder | Sugg Starting Grains | Velocity fps | Pressure C.U.P. | Max Load Grains | Velocity fps | Pressure C.U.P. |
|---|---|---|---|---|---|---|
| 700X | 1.5 | 750 | — | 1.9 | 895 | — |
| PB | 1.6 | 665 | — | 2.2 | 870 | — |
| SR-7625 | 1.7 | 675 | — | 2.3 | 860 | — |
| Bullseye | 1.5 | 685 | — | 2.0 | 830 | — |
| Red Dot | 1.5 | 695 | — | 2.3 | 940 | — |
| Green Dot | 1.6 | 705 | — | 2.4 | 895 | — |
| Unique | 1.8 | 625 | — | 2.6 | 860 | — |
| ****231** | 1.5 | 620 | 7,200 | **2.5** | **888** | **15,000** |
| **HP-38 | 1.5 | 688 | 9,200 | 2.0 | 824 | 13,800 |

**Note:** Loads shown in shaded panels are maximum.
Loads shown in bold designate potentially most accurate load.
** Designates use of Winchester cases and primers.

# 32 Smith & Wesson Long

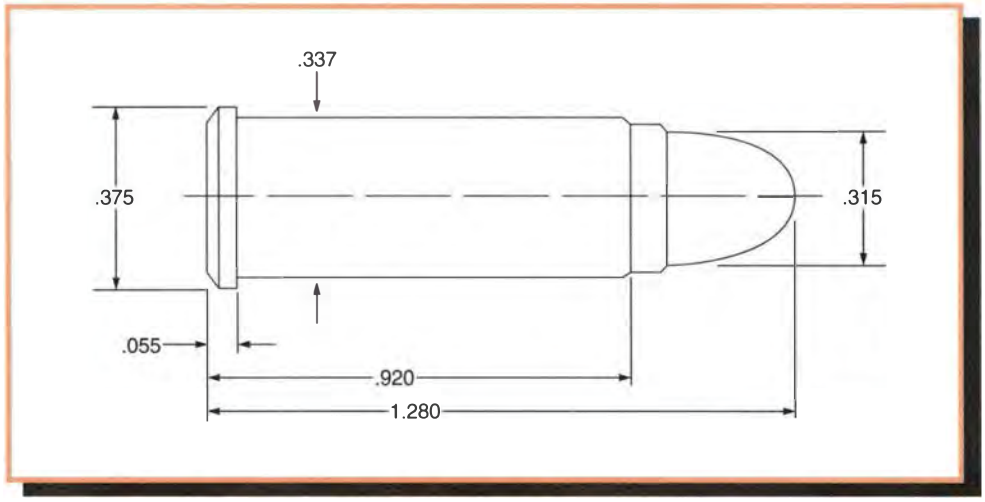


**Comments:**

This data is intended for use only in solid frame revolvers. We do not recommend use of these loads in older revolvers of the top break design due to their age and relative weakness. The 32 Smith & Wesson Long is dimensionally identical to the 32 Colt New Police. The main difference between the cartridges is the bullet weight of factory ammunition. Neither of these cartridges should be confused with the 32 Long Colt. Cartridge body diameter of the 32 Long Colt is nearly .020" smaller than these cartridges.

*Cartridges bearing the 32 Long Colt headstamp should not be fired in any revolver marked 32 S&W Long or 32 Colt New Police. Ruptured cases will result.*

The 32 S&W Long has developed a following among European target shooters due to its high accuracy potential. Internal barrel dimensions can vary widely from gun to gun. Shooters should slug their bore and size bullets to groove diameter or .001" larger. Make up a dummy round to ensure that your revolver will properly function with bullets of the chosen diameter. Fast propellants work best in these small cases. Alliant Bullseye or Winchester 231 are good choices.

**Test Components:**

Cases . . . . . .Remington
Trim-to Length . . . . . .910"
Primers . . . . . .Remington 1½
Primer Size . . . . . .Small Pistol
Lyman Shell Holder . . . . . .No. 9
Jacketed Bullets Used . . . . . .
Hornady HP/XTP #32050, 85 gr.
Hornady HP/XTP #32070, 100 gr.
Cast Bullets Used . . . . . .(sized to .312" dia)
#311252, 75 gr.

**85 gr. Jacketed HP** — 1.160" OAL — BC: .145 SD: .125

| Powder | Sugg Starting Grains | Velocity fps | Pressure | Max Load Grains | Velocity fps | Pressure |
|---|---|---|---|---|---|---|
| Bullseye | 2.1 | 654 | — | 2.4 | 815 | — |
| Titegroup | 2.1 | 704 | — | 2.4 | 820 | — |
| AA#2 | 2.1 | 742 | — | 2.4 | 909 | — |
| HP-38 | 2.5 | 842 | — | 2.8 | 871 | — |
| **231** | **2.6** | **752** | — | 2.9 | 835 | — |
| AA#5 | 3.2 | 655 | — | 3.8 | 799 | — |
| Unique | 2.7 | 709 | — | 3.0 | 837 | — |

**Test Specifications:**
**(Velocity Only)**

Firearm Used . . . . . .Smith & Wesson Model 31
Barrel Length . . . . . .4"
Twist . . . . . .1-18¾"
Groove Dia. . . . . .312"

**100 gr. Jacketed HP** — 1.160" OAL — BC: .170 SD: .147

| Powder | Sugg Starting Grains | Velocity fps | Pressure | Max Load Grains | Velocity fps | Pressure |
|---|---|---|---|---|---|---|
| Bullseye | 2.0 | 600 | — | 2.3 | 718 | — |
| AA#5 | 3.0 | 630 | — | 3.4 | 700 | — |
| Unique | 2.5 | 573 | — | 2.8 | 733 | — |
| SR-4756 | 3.7 | 677 | — | 4.1 | 761 | — |
| AA#9 | 5.3 | 626 | — | 5.9 | 767 | — |

**#311252** — 75 gr. (#2 Alloy) 1.115" OAL — BC: .121 SD: .110

| Powder | Sugg Starting Grains | Velocity fps | Pressure | Max Load Grains | Velocity fps | Pressure |
|---|---|---|---|---|---|---|
| Bullseye | 1.5 | 513 | — | 3.0 | 958 | — |
| Red Dot | 1.8 | 588 | — | 3.3 | 1028 | — |
| 700X | 1.8 | 598 | — | 3.3 | 1098 | — |
| Green Dot | 1.9 | 563 | — | 3.4 | 993 | — |
| 231 | 2.0 | 677 | — | 3.5 | 1043 | — |
| Unique | 2.5 | 608 | — | 4.0 | 943 | — |
| SR-7625 | 2.4 | 583 | — | 3.6 | 988 | — |

**Note:** Loads shown in shaded panels are maximum.
Loads shown in bold designate potentially most accurate load.

# 32 H&R Magnum

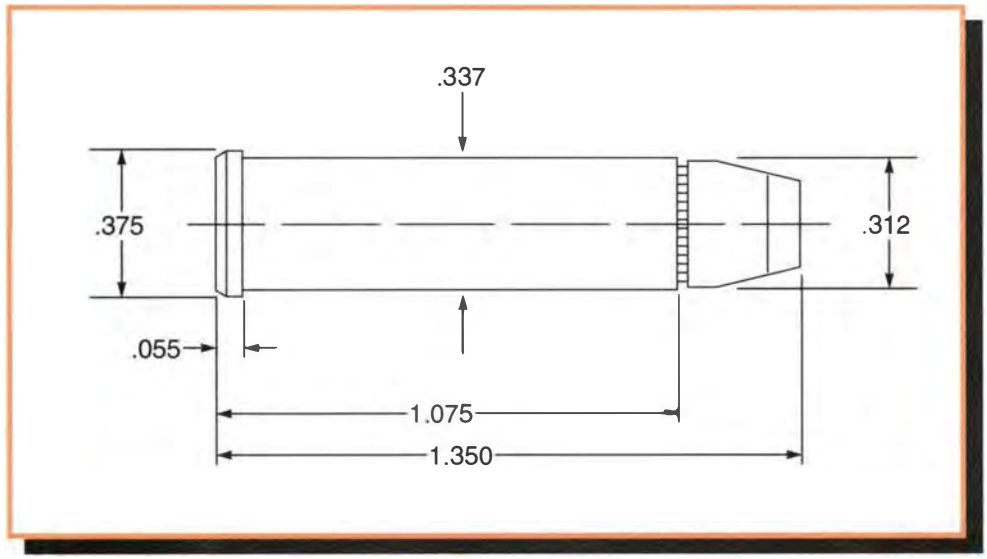


**Comments:**

Revolvers chambered for this cartridge will also fire 32 S&W, or 32 S&W Long ammo. However the reverse is not true.

Do not load 32 H&R data into any case except those so headstamped.

Alliants Unique, Hodgdon HP-38, and Winchester 231 will provide the best accuracy.

**Test Components:**

Cases . . . . . .Federal
Trim-to Length . . . . . .1.065"
Primers . . . . . .Federal 100
Primer Size . . . . . .Small Pistol
Lyman Shell Holder . . . . . .No. 9
Jacketed Bullets Used . . . . . .Sierra FMJ #8010, 71 gr.
Hornady HP/XTP #32050, 85 gr.
Sierra JHC #8030, 90 gr.
Hornady HP/XTP #32070, 100 gr.
Cast Bullets Used . . . . . .(sized to .313" dia)
#313249, 85 gr.

**Test Specifications:**
**(Velocity & Pressure)**

Firearm Used . . . . . .Universal Receiver
Barrel Length . . . . . .5"
Twist . . . . . .1-16"
Groove Dia. . . . . .312"

**71 gr. FMJ**
1.350" OAL
**BC:** .120
**SD:** .105

| Powder | Sugg Starting Grains | Velocity fps | Pressure C.U.P. | Max Load Grains | Velocity fps | Pressure C.U.P. |
|---|---|---|---|---|---|---|
| Bullseye | 3.8 | 1098 | 15,500 | 4.3 | 1269 | 20,100 |
| HP-38 | 3.0 | 902 | 14,900 | 3.9 | 1104 | 20,100 |
| 231 | 3.5 | 817 | 13,400 | 4.5 | 1132 | 20,000 |
| **Unique** | **4.5** | **1004** | **14,400** | 5.0 | 1169 | 18,200 |
| SR-4756 | 4.7 | 900 | 12,400 | 5.5 | 1141 | 19,200 |
| HS-6 | 5.4 | 1098 | 15,600 | 6.0 | 1310 | 20,100 |
| 800X | 4.8 | 936 | 12,200 | 6.0 | 1174 | 19,400 |
| Blue Dot | 6.5 | 936 | 14,300 | 7.8 | 1188 | 20,600 |

**85 gr. Jacketed HP**
1.310" OAL
**BC:** .145
**SD:** .125

| Powder | Sugg Starting Grains | Velocity fps | Pressure C.U.P. | Max Load Grains | Velocity fps | Pressure C.U.P. |
|---|---|---|---|---|---|---|
| Bullseye | 3.3 | 914 | 16,800 | 3.7 | 1043 | 19,800 |
| HP-38 | 2.3 | 755 | 13,700 | 3.5 | 1022 | 21,000 |
| 231 | 2.8 | 773 | 13,300 | 4.0 | 1054 | 20,800 |
| **Unique** | **4.0** | **859** | **14,900** | 4.5 | 1049 | 18,600 |
| AA#5 | 4.0 | 788 | 13,000 | 5.4 | 1089 | 20,600 |
| SR-4756 | 3.5 | 641 | 11,500 | 4.8 | 1073 | 20,700 |
| HS-6 | 5.0 | 897 | 15,100 | 5.6 | 1124 | 20,000 |
| 800X | 3.7 | 758 | 13,600 | 5.0 | 1005 | 20,500 |
| Blue Dot | 5.5 | 798 | 12,700 | 6.7 | 1044 | 19,200 |

**Note:** Loads shown in shaded panels are maximum.
Loads shown in bold designate potentially most accurate load.

# 32 H&R Magnum

**90 gr. Jacketed HC**
1.315" OAL
**BC:** .146
**SD:** .132

| Powder | Sugg Starting Grains | Velocity fps | Pressure C.U.P. | Max Load Grains | Velocity fps | Pressure C.U.P. |
|---|---|---|---|---|---|---|
| Bullseye | 3.1 | 844 | 16,700 | 3.5 | 1008 | 20,300 |
| HP-38 | 2.0 | 612 | 12,100 | 3.3 | 941 | 20,600 |
| **231** | 2.5 | 679 | 12,500 | **3.8** | **980** | **20,600** |
| Unique | 3.8 | 869 | 13,600 | 4.3 | 1003 | 18,400 |
| AA#5 | 4.0 | 723 | 11,900 | 5.4 | 1064 | 20,700 |
| Herco | 3.7 | 880 | 13,900 | 4.2 | 1005 | 19,400 |
| SR-4756 | 3.2 | 549 | 9,800 | 4.6 | 1015 | 20,500 |
| HS-6 | 5.4 | 863 | 14,300 | 6.0 | 1016 | 18,900 |
| 800X | 3.8 | 805 | 13,400 | 5.0 | 1057 | 20,600 |
| Blue Dot | 5.0 | 719 | 11,800 | 6.5 | 1014 | 19,700 |
| 296 | — | — | — | 9.9 | 1177 | 19,400 |

**100 gr. Jacketed HP**
1.315" OAL
**BC:** .170
**SD:** .147

| Powder | Sugg Starting Grains | Velocity fps | Pressure C.U.P. | Max Load Grains | Velocity fps | Pressure C.U.P. |
|---|---|---|---|---|---|---|
| Bullseye | 2.9 | 717 | 15,400 | 3.3 | 838 | 19,500 |
| 231 | 3.2 | 706 | 15,000 | 3.6 | 841 | 19,500 |
| **Unique** | **3.6** | **781** | **15,900** | 4.0 | 928 | 20,800 |
| AA#5 | 4.5 | 766 | 15,300 | 5.1 | 931 | 20,100 |
| Herco | 3.7 | 740 | 15,200 | 4.2 | 895 | 19,700 |
| HS-6 | 4.9 | 754 | 15,100 | 5.4 | 911 | 19,500 |
| Blue Dot | 5.1 | 711 | 14,300 | 5.7 | 935 | 20,100 |

**#313249**
85 gr. (#2 Alloy) 1.350" OAL
**BC:** .212
**SD:** .124

| Powder | Sugg Starting Grains | Velocity fps | Pressure C.U.P. | Max Load Grains | Velocity fps | Pressure C.U.P. |
|---|---|---|---|---|---|---|
| Titegroup | 3.1 | 992 | 15,900 | 3.5 | 1089 | 17,200 |
| Bullseye | 2.5 | 803 | 12,400 | 4.0 | 1115 | 20,900 |
| Red Dot | 2.5 | 801 | 12,800 | 3.8 | 1110 | 20,400 |
| HP-38 | 2.0 | 738 | 10,900 | 3.5 | 1082 | 20,700 |
| **231** | 2.5 | 777 | 12,500 | **4.1** | **1101** | **20,400** |
| Unique | 3.0 | 747 | 10,800 | 4.5 | 1092 | 20,100 |
| AA#5 | 4.0 | 820 | 11,500 | 5.4 | 1124 | 19,200 |
| SR-7625 | 2.7 | 709 | 9,700 | 4.3 | 1083 | 19,800 |
| Herco | 3.5 | 845 | 12,500 | 4.9 | 1080 | 19,300 |
| SR-4756 | 3.0 | 659 | 8,000 | 4.6 | 1091 | 18,900 |
| 800X | 3.8 | 889 | 12,400 | 5.2 | 1136 | 19,300 |
| Blue Dot | 5.0 | 824 | 12,700 | 6.5 | 1105 | 19,000 |

**Note:** Loads shown in shaded panels are maximum.
Loads shown in bold designate potentially most accurate load.

# 32-20 Winchester (32-20 WCF)

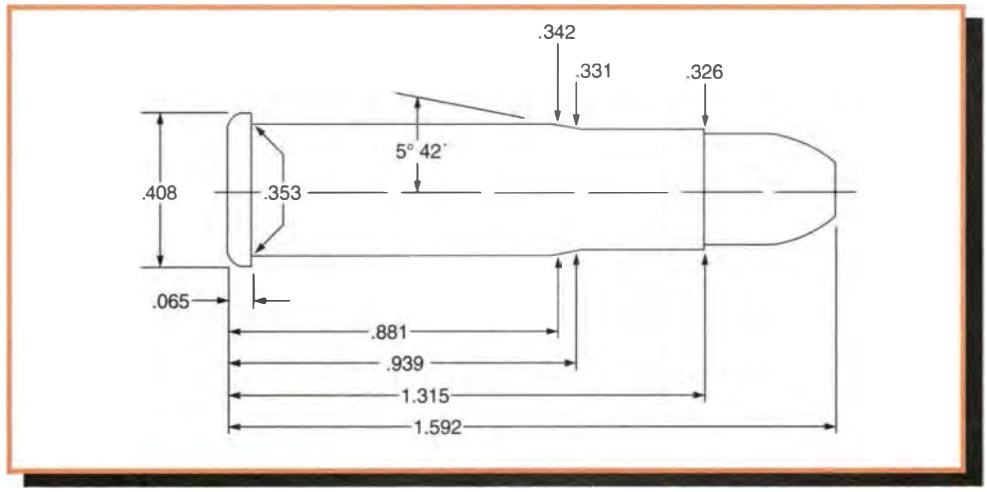


**Comments:**

This data is for revolvers made by Colt, Smith & Wesson and Ruger designed for smokeless powder 32-20 Winchester ammunition. Do not use this data for old guns designed for black powder or any of the old cheap Spanish copies of the S&W revolver.

The 32-20 Winchester has been chambered in revolvers for many years as a companion to the numerous lever action rifles which also chambered the cartridge.

This is a good game cartridge when fired in well-made revolvers.

**Test Components:**

Cases . . . . . .Winchester
Trim-to Length . . . . . .1.305"
Primers . . . . . .Winchester WSP
Primer Size . . . . . .Small Pistol
Lyman Shell Holder . . . . . No. 10
Jacketed Bullets Used . . . . . .
Hornady HP/XTP #32050, 85 gr.
Sierra JHC #8030, 90 gr.
Cast Bullets Used . . . . . .(sized to .313" dia)
#311008, 115 gr.

**Test Specifications:**
**(Velocity Only)**

Firearm Used . . . . . .Ruger Blackhawk
Barrel Length . . . . . .6½"
Twist . . . . . .1-16"
Groove Dia. . . . . .312"

**85 gr. Jacketed HP** — 1.535" OAL — **BC:** .145 **SD:** .125

| Powder | Sugg Starting Grains | Velocity fps | Pressure C.U.P. | Max Load Grains | Velocity fps | Pressure C.U.P. |
|---|---|---|---|---|---|---|
| 231 | 3.2 | 745 | — | 4.7 | 1022 | — |
| SR-7625 | 3.3 | 703 | — | 4.7 | 987 | — |
| SR-4756 | 4.5 | 748 | — | 5.8 | 1101 | — |
| Unique | 4.1 | 742 | — | **4.8** | **967** | — |
| AA#5 | 4.2 | 554 | — | 5.7 | 948 | — |

**90 gr. Jacketed HP** — 1.535" OAL — **BC:** .112 **SD:** .132

| Powder | Sugg Starting Grains | Velocity fps | Pressure C.U.P. | Max Load Grains | Velocity fps | Pressure C.U.P. |
|---|---|---|---|---|---|---|
| 231 | 3.4 | 679 | — | 4.5 | 937 | — |
| SR-7625 | 3.7 | 716 | — | 4.5 | 845 | — |
| SR-4756 | 5.2 | 791 | — | 5.5 | 928 | — |
| Unique | 3.6 | 639 | — | **4.8** | **864** | — |
| AA#5 | 4.7 | 697 | — | 5.4 | 875 | — |

**#311008** — 115 gr. (#2 Alloy) 1.530" OAL — **BC:** .154 **SD:** .168

| Powder | Sugg Starting Grains | Velocity fps | Pressure C.U.P. | Max Load Grains | Velocity fps | Pressure C.U.P. |
|---|---|---|---|---|---|---|
| **231** | 3.1 | 782 | — | **3.8** | **905** | — |
| SR-7625 | 3.2 | 642 | — | 4.0 | 837 | — |
| SR-4756 | 4.0 | 735 | — | 4.7 | 896 | — |
| Unique | 3.2 | 684 | — | 4.0 | 835 | — |
| AA#5 | 3.8 | 649 | — | 4.5 | 825 | — |

**Note:** Loads shown in shaded panels are maximum.
Loads shown in bold designate potentially most accurate load.

# 380 Automatic (380 ACP) (9mm KURZ)

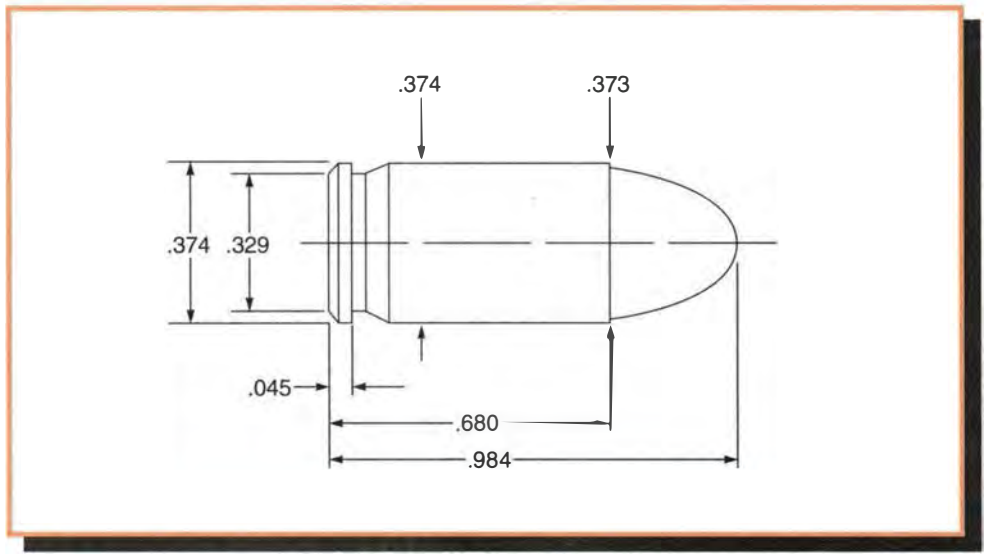


**Comments:**

Groove diameters have been measured as small as 0.355" to as large as 0.362 inch. Such variations can play havoc with accuracy. Because of chamber restrictions it is generally not safe to load bullets of a diameter larger than 0.355 inch.

Heavy (long) bullets of 0.355" diameter may cause case bulging due to the internal case taper. This may be ignored so long as the outside diameter of the case at the bulge does not exceed 0.374 inch.

Winchester 231 is an outstanding performer with all weight bullets in this cartridge.

**Test Components:**

Cases . . . . . .Federal
Trim-to Length . . . . . .677"
Primers . . . . . .Federal 100 and Winchester WSP
Primer Size . . . . . .Small Pistol
Lyman Shell Holder . . . . . .No. 26
Jacketed Bullets Used . . . . . .Sierra JHC #8100, 90 gr.
Sierra FMJ #8105, 95 gr.
Hornady FMJ #35527, 100 gr.
Hornady HP/XTP #35540, 115 gr.
Cast Bullets Used . . . . . .(sized to .355" dia)
#356242, 90 gr.
#352242, 120 gr.

**Test Specifications: (Velocity & Pressure)**

Firearm Used . . . . . .Universal Receiver
Barrel Length . . . . . .3¾"
Twist . . . . . .1-16"
Groove Dia. . . . . .355"

**90 gr. Jacketed HC** .925" OAL — BC: .115 SD: .102

| Powder | Sugg Starting Grains | Velocity fps | Pressure C.U.P. | Max Load Grains | Velocity fps | Pressure C.U.P. |
|---|---|---|---|---|---|---|
| **Bullseye** | 2.0 | 713 | 9,100 | **2.9** | **970** | **15,500** |
| Titegroup | 2.4 | 828 | 13,300 | 2.7 | 914 | 15,600 |
| Red Dot | 1.9 | 691 | 8,400 | 2.8 | 983 | 15,700 |
| 700X | 1.8 | 704 | 9,100 | 2.5 | 959 | 15,900 |
| N320 | 2.6 | 769 | 11,300 | 2.9 | 907 | 15,300 |
| AA#2 | 2.4 | 772 | 12,500 | 2.7 | 889 | 16,200 |
| 231 | 2.1 | 681 | 8,100 | 3.2 | 992 | 16,000 |
| Unique | 2.5 | 709 | 8,700 | 3.4 | 967 | 15,500 |
| SR-7625 | 2.2 | 583 | 8,100 | 3.1 | 941 | 15,200 |
| Power Pistol | 3.6 | 881 | 14,300 | 4.0 | 953 | 16,300 |

**95 gr. FMJ** .900" OAL — BC: .116 SD: .108

| Powder | Sugg Starting Grains | Velocity fps | Pressure C.U.P. | Max Load Grains | Velocity fps | Pressure C.U.P. |
|---|---|---|---|---|---|---|
| Bullseye | 2.0 | 724 | 9,400 | 2.8 | 953 | 15,700 |
| Titegroup | 2.4 | 861 | 14,500 | 2.7 | 938 | 16,400 |
| Red Dot | 2.0 | 712 | 9,600 | 2.7 | 938 | 15,600 |
| 700X | 1.7 | 693 | 9,500 | 2.5 | 935 | 15,700 |
| N320 | 2.3 | 825 | 11,300 | 2.6 | 865 | 15,200 |
| AA#2 | 1.9 | 694 | 9,900 | 2.9 | 922 | 15,600 |
| **231** | 2.1 | 704 | 9,700 | **2.9** | **939** | **15,800** |
| AA#5 | 3.0 | 671 | 9,100 | 3.9 | 940 | 16,000 |
| Unique | 2.3 | 706 | 9,600 | 3.1 | 952 | 16,000 |
| SR-7625 | 2.9 | 769 | 11,300 | 3.3 | 899 | 15,400 |
| Power Pistol | 3.5 | 856 | 13,500 | 3.9 | 933 | 15,600 |

**Note:** Loads shown in shaded panels are maximum.
Loads shown in bold designate potentially most accurate load.

# 380 Automatic (380 ACP) (9mm KURZ)

**100 gr. FMJ**
.955" OAL
**BC:** .115
**SD:** .113

| Powder | Sugg Starting Grains | Velocity fps | Pressure C.U.P. | Max Load Grains | Velocity fps | Pressure C.U.P. |
|---|---|---|---|---|---|---|
| Bullseye | 2.0 | 695 | 7,700 | 3.1 | 988 | 15,400 |
| Titegroup | 2.2 | 762 | 12,100 | 2.5 | 859 | 15,300 |
| Red Dot | 1.8 | 651 | 6,500 | 3.1 | 1026 | 15,900 |
| **700X** | 1.9 | 704 | 9,100 | **2.5** | **889** | **14,700** |
| 231 | 2.2 | 693 | 6,600 | 3.5 | 1024 | 15,600 |
| Unique | 2.6 | 725 | 8,600 | 3.6 | 1013 | 15,200 |
| SR-7625 | 2.8 | 799 | 12,000 | 3.2 | 834 | 14,500 |
| Power Pistol | 3.5 | 843 | 13,700 | 3.9 | 930 | 16,500 |

**115 gr. Jacketed HP**
.956" OAL
**BC:** .129
**SD:** .130

| Powder | Sugg Starting Grains | Velocity fps | Pressure C.U.P. | Max Load Grains | Velocity fps | Pressure C.U.P. |
|---|---|---|---|---|---|---|
| Bullseye | 2.0 | 711 | 9,900 | 2.9 | 937 | 15,100 |
| Red Dot | 1.8 | 670 | 8,700 | 2.8 | 945 | 15,500 |
| **700X** | 1.6 | 658 | 9,100 | **2.5** | **921** | **15,900** |
| 231 | 2.0 | 664 | 8,300 | 3.1 | 934 | 15,300 |
| SR-7625 | 2.2 | 667 | 8,700 | 3.1 | 928 | 15,800 |
| Power Pistol | 2.9 | 748 | 13,500 | 3.3 | 862 | 16,700 |
| HS-6 | 3.1 | 677 | 8,700 | 4.5 | 945 | 15,200 |

**#356242**
90 gr. (#2 Alloy) .980" OAL
**BC:** .105
**SD:** .102

| Powder | Sugg Starting Grains | Velocity fps | Pressure C.U.P. | Max Load Grains | Velocity fps | Pressure C.U.P. |
|---|---|---|---|---|---|---|
| *Bullseye | 2.4 | 750 | 11,800 | 3.0 | 915 | 16,000 |
| Titegroup | 2.4 | 755 | 11,600 | 2.7 | 871 | 15,400 |
| *Red Dot | 2.0 | 690 | 11,000 | 2.6 | 880 | 15,200 |
| *700X | 1.9 | 695 | 11,100 | 2.5 | 900 | 15,800 |
| *Green Dot | 2.1 | 655 | 10,000 | 3.0 | 910 | 16,000 |
| Amer. Select | 2.7 | 843 | 13,100 | 3.1 | 919 | 16,400 |
| **231** | 2.3 | 701 | 7,900 | **3.5** | **1000** | **15,600** |
| *PB | 2.2 | 645 | 10,300 | 2.8 | 860 | 15,200 |
| *Unique | 3.1 | 755 | 11,800 | 3.7 | 920 | 16,000 |
| SR-4756 | 2.8 | 633 | 6,900 | 4.1 | 970 | 15,600 |
| Power Pistol | 3.8 | 902 | 15,100 | 4.3 | 968 | 16,500 |
| Blue Dot | 4.0 | 667 | 7,000 | 5.5 | 961 | 14,600 |

**#356242**
120 gr. (#2 Alloy) .980" OAL
**BC:** .154
**SD:** .136

| Powder | Sugg Starting Grains | Velocity fps | Pressure C.U.P. | Max Load Grains | Velocity fps | Pressure C.U.P. |
|---|---|---|---|---|---|---|
| *Bullseye | 1.6 | 600 | 10,500 | 2.1 | 750 | 15,200 |
| *Red Dot | 1.6 | 615 | 11,000 | 2.1 | 770 | 15,800 |
| *700X | 1.4 | 610 | 11,300 | 1.9 | 750 | 15,800 |
| *Green Dot | 1.7 | 620 | 10,800 | 2.3 | 760 | 15,400 |
| **231** | 2.1 | 718 | 9,200 | **3.2** | **946** | **15,800** |
| *PB | 1.7 | 605 | 10,800 | 2.2 | 750 | 15,800 |
| *Unique | 2.2 | 630 | 11,300 | 2.8 | 780 | 15,600 |
| SR-4756 | 2.3 | 662 | 7,800 | 3.5 | 927 | 15,800 |
| Blue Dot | 3.7 | 732 | 9,000 | 5.3 | 948 | 15,900 |

**Note:** Loads shown in shaded panels are maximum.
Loads shown in bold designate potentially most accurate load.
* Designates use of Super Vel cases.

# 9mm Luger (9mm Parabellum) (9 x 19mm)

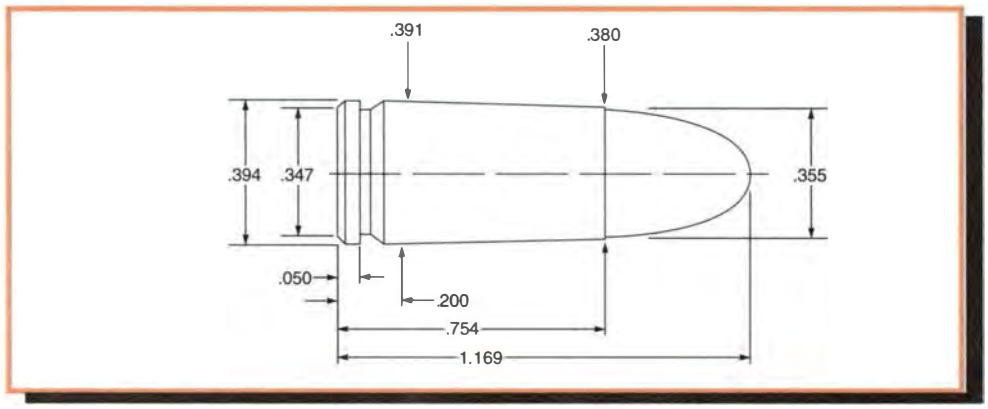


**Comments:**

The most common diameter for this cartridge is 0.354 inch. However, the industry standard has recently been established at 0.355 inch. All barrels of 0.354" to 0.356" are correctly matched with a bullet diameter of 0.355 inch. Barrels with larger groove diameters will often provide poor accuracy with a 0.355" bullet but chamber restrictions prevent the safe use of larger diameter bullets.

This cartridge headspaces from the mouth and therefore cases trimming must be uniform and accurate. Do not reduce cases below the trim-to length. Additionally do not roll crimp bullets as this will prevent the case from properly headspacing on its mouth. A modest taper crimp may be employed if found necessary.

The most popular cast bullet for this round has been #356402. However, there are many good choices based upon intended use. Bullet #356637 (147 gr.) closely duplicates the U.S. Military subsonic bullet design and has proven to be very accurate.

Alliants Bullseye, Winchester 231, and Alliants Unique are very good popular propellants for this cartridge.

With any handgun cartridge, it is important not to seat bullets to a shorter length than specified in the data. This is especially important with 9mm loads. Pressures can be raised dramatically with deep seating.

**Test Components:**

Cases . . . . . .Federal
Trim-to Length . . . . . ..751"
Primers . . . . . .CCI 500
Primer Size . . . . . .Small Pistol
Lyman Shell Holder . . . . . .No. 12
Jacketed Bullets Used . . . . . .Sierra JHP #8100, 90 gr.
Sierra FMJ #8105, 95 gr.
Hornady FMJ #35527, 100 gr.
Hornady HP/XTP #35540, 115 gr.
Sierra JHP #8125, 125 gr.
Sierra FMJ #8345, 130 gr.
Speer TMJ #4006, 147 gr.

Cast Bullets Used . . . . . .(sized to .356" dia)
*gas check bullet #356242, 90 gr.
#356242, 120 gr.
#356402, 120 gr.
*#358093, 125 gr.
#356637, 147 gr.

**Test Specifications:**
**(Velocity & Pressure)**

Firearm Used . . . . . .Universal Receiver
Barrel Length . . . . . .4"
Groove Dia. . . . . .355"

**90 gr. Jacketed HP**
1.010" OAL
**BC:** .115
**SD:** .102

| Powder | Sugg Starting Grains | Velocity fps | Pressure C.U.P. | Max Load Grains | Velocity fps | Pressure C.U.P. |
|---|---|---|---|---|---|---|
| Clays | 3.0 | 982 | 22,000 | 3.7 | 1213 | 30,800 |
| Titegroup | 4.4 | 1170 | 24,100 | 4.9 | 1305 | 31,700 |
| **Bullseye** | 4.1 | 971 | 21,600 | **5.2** | **1376** | **30,900** |
| 700X | 3.6 | 1027 | 25,000 | 4.5 | 1292 | 30,500 |
| 231 | 4.0 | 1156 | 20,600 | 5.2 | 1411 | 30,400 |
| AA#5 | 5.2 | 835 | 16,600 | 6.5 | 1347 | 30,800 |
| Unique | 5.0 | 1089 | 26,900 | 6.3 | 1343 | 32,600 |
| Power Pistol | 6.3 | 1216 | 23,800 | 7.0 | 1331 | 30,400 |
| N340 | 5.2 | 1161 | 24,400 | 5.8 | 1300 | 31,000 |
| SR-4756 | 5.0 | 1028 | 24,000 | 6.2 | 1352 | 31,900 |
| HS-6 | 5.9 | 858 | 20,200 | 7.4 | 1333 | 31,800 |
| Blue Dot | 7.0 | 1072 | 24,800 | 8.9 | 1341 | 31,500 |

**95 gr. FMJ**
1.005" OAL
**BC:** .107
**SD:** .108

| Powder | Sugg Starting Grains | Velocity fps | Pressure C.U.P. | Max Load Grains | Velocity fps | Pressure C.U.P. |
|---|---|---|---|---|---|---|
| Titegroup | 4.3 | 1150 | 25,500 | 4.8 | 1264 | 30,800 |
| Bullseye | 3.5 | 893 | 19,400 | 5.0 | 1307 | 30,600 |
| 700X | 3.2 | 893 | 19,600 | 4.5 | 1301 | 31,400 |
| 231 | 3.7 | 1068 | 19,200 | 5.1 | 1374 | 32,400 |
| AA#5 | 5.2 | 915 | 18,100 | 6.5 | 1394 | 31,000 |
| Unique | 4.5 | 1007 | 22,000 | 5.8 | 1399 | 32,000 |
| Power Pistol | 6.2 | 1214 | 26,000 | 6.9 | 1337 | 31,800 |
| Universal | 4.7 | 939 | 15,600 | 5.3 | 1286 | 28,800 |
| **N340** | **5.1** | **1162** | **25,200** | 5.7 | 1291 | 32,400 |
| SR-4756 | 4.5 | 983 | 20,700 | 5.8 | 1306 | 32,700 |
| HS-6 | 5.8 | 952 | 20,100 | 7.0 | 1315 | 29,600 |
| Blue Dot | 6.8 | 1101 | 22,900 | 8.9+ | 1457 | 32,300 |

**Note:** Loads shown in shaded panels are maximum.
Loads shown in bold designate potentially most accurate load.

# 9mm Luger (9mm Parabellum) (9 x 19mm)

**100 gr. FMJ**
1.105" OAL
**BC:** .115
**SD:** .113

| Powder | Sugg Starting Grains | Velocity fps | Pressure C.U.P. | Max Load Grains | Velocity fps | Pressure C.U.P. |
|---|---|---|---|---|---|---|
| **Titegroup** | **4.2** | **1131** | **25,800** | 4.7 | 1222 | 30,200 |
| Bullseye | 4.0 | 976 | 22,000 | 5.0 | 1263 | 31,700 |
| 700X | 3.5 | 870 | 20,200 | 4.4 | 1171 | 31,500 |
| 231 | 4.5 | 1061 | 22,900 | 5.0 | 1162 | 27,200 |
| Unique | 4.5 | 931 | 20,000 | 5.6 | 1256 | 31,400 |
| Power Pistol | 6.1 | 1143 | 24,100 | 6.8 | 1310 | 32,200 |
| N340 | 5.1 | 1133 | 24,000 | 5.7 | 1255 | 31,000 |
| SR-4756 | 4.5 | 681 | 13,000 | 5.7 | 1225 | 30,400 |
| HS-6 | 6.0 | 801 | 15,900 | 7.4 | 1206 | 30,100 |
| AA#7 | 8.0 | 884 | 18,600 | 9.6 | 1271 | 31,000 |
| Blue Dot | 6.5 | 973 | 19,800 | 7.8 | 1252 | 30,200 |

**115 gr. Jacketed HP**
1.090" OAL
**BC:** .129
**SD:** .130

| Powder | Sugg Starting Grains | Velocity fps | Pressure C.U.P. | Max Load Grains | Velocity fps | Pressure C.U.P. |
|---|---|---|---|---|---|---|
| Titegroup | 4.0 | 1046 | 27,100 | 4.5 | 1119 | 31,400 |
| Bullseye | 3.5 | 945 | 18,700 | 4.8 | 1184 | 31,700 |
| 700X | 3.1 | 918 | 20,200 | 4.5 | 1171 | 31,700 |
| 231 | 3.5 | 959 | 20,700 | 4.9 | 1253 | 32,100 |
| Unique | 4.4 | 996 | 20,600 | 5.8 | 1233 | 30,700 |
| **Power Pistol** | 5.9 | 1102 | 27,100 | **6.5** | **1212** | **31,500** |
| N340 | 4.5 | 999 | 24,300 | 5.0 | 1124 | 30,500 |
| SR-4756 | 4.5 | 946 | 18,600 | 6.2+ | 1147 | 28,100 |
| HS-6 | 5.7 | 956 | 17,400 | 7.2 | 1193 | 30,400 |
| AA#7 | 6.8 | 871 | 20,700 | 8.5 | 1158 | 30,400 |
| Blue Dot | 6.8 | 1110 | 27,300 | 7.6+ | 1189 | 32,300 |

**125 gr. Jacketed HP**
1.075" OAL
**BC:** .137
**SD:** .142

| Powder | Sugg Starting Grains | Velocity fps | Pressure C.U.P. | Max Load Grains | Velocity fps | Pressure C.U.P. |
|---|---|---|---|---|---|---|
| Clays | 3.1 | 872 | 26,700 | 3.6 | 960 | 31,700 |
| Titegroup | 3.8 | 962 | 26,100 | 4.2 | 1045 | 31,200 |
| Bullseye | 3.9 | 979 | 27,900 | 4.5 | 1073 | 30,100 |
| 700X | 3.8 | 930 | 22,900 | 4.2 | 1022 | 31,400 |
| 231 | 3.9 | 960 | 27,000 | 4.4 | 1043 | 32,000 |
| AA#5 | 5.4 | 955 | 24,200 | 6.1 | 1078 | 31,400 |
| Unique | 4.5 | 997 | 27,300 | 5.0 | 1078 | 30,700 |
| Power Pistol | 5.1 | 979 | 23,100 | 5.7 | 1107 | 31,300 |
| Universal | 4.0 | 880 | 17,400 | 4.5 | 1042 | 29,300 |
| N340 | 4.0 | 937 | 21,900 | 4.6 | 1060 | 31,200 |
| HS-6 | 5.8 | 949 | 23,800 | 6.6 | 1080 | 30,400 |
| **AA#7** | 7.0 | 1008 | 26,700 | **7.8** | **1119** | **31,600** |
| Blue Dot | 6.3 | 1049 | 27,400 | 7.1+ | 1163 | 32,400 |

**130 gr. FMJ**
1.160" OAL
**BC:** .160
**SD:** .147

| Powder | Sugg Starting Grains | Velocity fps | Pressure C.U.P. | Max Load Grains | Velocity fps | Pressure C.U.P. |
|---|---|---|---|---|---|---|
| Clays | 2.5 | 690 | 19,200 | 3.6 | 933 | 31,500 |
| Titegroup | 3.8 | 936 | 24,400 | 4.2 | 1035 | 30,300 |
| Bullseye | 3.6 | 780 | 21,500 | 4.5 | 1002 | 31,000 |
| 700X | 3.0 | 803 | 21,700 | 4.0 | 991 | 32,500 |
| 231 | 3.9 | 949 | 25,300 | 4.4 | 1039 | 30,600 |
| Unique | 3.5 | 710 | 18,200 | 4.8 | 1014 | 31,200 |
| Power Pistol | 5.1 | 1010 | 25,300 | 5.7 | 1115 | 30,700 |
| Universal | 4.0 | 904 | 18,300 | 4.5 | 1045 | 28,700 |
| N340 | 4.1 | 941 | 23,300 | 4.6 | 1067 | 32,000 |
| HS-6 | 5.0 | 752 | 18,000 | 6.5 | 1112 | 32,500 |
| AA#7 | 6.5 | 833 | 20,500 | 8.2 | 1119 | 32,600 |
| Blue Dot | 5.4 | 852 | 21,700 | 6.8 | 1114 | 31,700 |

**147 gr. TMJ**
1.115" OAL
**BC:** .208
**SD:** .167

| Powder | Sugg Starting Grains | Velocity fps | Pressure C.U.P. | Max Load Grains | Velocity fps | Pressure C.U.P. |
|---|---|---|---|---|---|---|
| Titegroup | 3.2 | 914 | 27,700 | 3.6 | 983 | 31,900 |
| Bullseye | 3.4 | 871 | 23,500 | 3.9 | 971 | 29,900 |
| 700X | 2.8 | 766 | 23,300 | 3.6 | 949 | 30,700 |
| 231 | 3.5 | 855 | 23,000 | 4.1 | 957 | 27,500 |
| Unique | 3.7 | 873 | 20,500 | 4.5 | 1039 | 29,100 |
| Power Pistol | 4.5 | 960 | 26,900 | 5.0 | 1043 | 32,400 |
| Universal | 3.1 | 778 | 19,000 | 3.5 | 924 | 29,200 |
| **N340** | **3.9** | **935** | **28,500** | 4.4 | 1012 | 32,200 |
| WSF | 3.5 | 790 | 21,500 | 4.4 | 983 | 30,800 |
| HS-6 | 4.8 | 866 | 22,000 | 5.8 | 1046 | 30,600 |
| AA#7 | 6.0 | 852 | 20,200 | 7.2 | 1014 | 29,000 |
| Blue Dot | 5.3 | 864 | 19,000 | 6.6 | 1052 | 28,600 |

**#356242**
90 gr. (#2 Alloys) 1.045" OAL
**BC:** .105
**SD:** .101

| Powder | Sugg Starting Grains | Velocity fps | Pressure C.U.P. | Max Load Grains | Velocity fps | Pressure C.U.P. |
|---|---|---|---|---|---|---|
| Titegroup | 4.3 | 1215 | 26,100 | 4.8 | 1299 | 30,600 |
| **Bullseye** | **4.0** | **1060** | **19,800** | 5.2 | 1315 | 32,000 |
| 700X | 4.1 | 1125 | 22,800 | 5.1 | 1285 | 31,000 |
| Red Dot | 4.1 | 1120 | 22,800 | 5.5 | 1340 | 32,500 |
| 231 | 3.8 | 1093 | 20,500 | 5.1 | 1455 | 32,100 |
| SR-7625 | 5.0 | 1180 | 23,400 | 5.9 | 1310 | 30,500 |
| PB | 4.8 | 1115 | 19,800 | 6.0 | 1360 | 33,000 |
| Green Dot | 4.3 | 1095 | 20,400 | 6.0 | 1325 | 31,000 |
| N340 | 5.2 | 1201 | 23,800 | 5.8 | 1321 | 31,400 |
| Unique | 5.0 | 1065 | 19,800 | 6.8 | 1325 | 31,500 |
| Power Pistol | 6.3 | 1280 | 27,700 | 7.0 | 1389 | 31,900 |
| HS-6 | 5.8 | 1011 | 19,500 | 7.2 | 1356 | 29,800 |
| AA#5 | 6.6 | 1163 | 23,100 | 7.4 | 1284 | 29,300 |
| SR-4756 | 5.3 | 1168 | 22,400 | 7.2 | 1380 | 30,500 |

**Note:** Loads shown in shaded panels are maximum.
Loads shown in bold designate potentially most accurate load.
\+ Designates a compressed powder charge.

# 9mm Luger (9mm Parabellum) (9 x 19mm)

**#356242**
120 gr. (#2 Alloy) 1.065" OAL
**BC:** .154
**SD:** .135

| Powder | Sugg Starting Grains | Velocity fps | Pressure C.U.P. | Max Load Grains | Velocity fps | Pressure C.U.P. |
|---|---|---|---|---|---|---|
| Titegroup | 3.2 | 1021 | 25,200 | 3.8 | 1091 | 30,000 |
| Bullseye | 3.4 | 939 | 23,600 | 4.2 | 1175 | 32,500 |
| 700X | 3.0 | 940 | 26,000 | 3.7 | 1080 | 31,600 |
| Red Dot | 3.0 | 919 | 25,100 | 3.9 | 1140 | 32,000 |
| 231 | 3.0 | 1010 | 20,000 | 4.1 | 1148 | 30,200 |
| SR-7625 | 3.0 | 852 | 21,400 | 3.9 | 1095 | 31,300 |
| PB | 3.2 | 872 | 24,500 | 4.1 | 1106 | 31,400 |
| Green Dot | 3.5 | 966 | 26,200 | 4.4 | 1152 | 32,800 |
| **N340** | **4.0** | **1047** | **27,300** | 4.5 | 1135 | 31,600 |
| Unique | 4.0 | 1013 | 26,500 | 5.0 | 1194 | 32,800 |
| Power Pistol | 5.0 | 1107 | 27,700 | 5.6 | 1190 | 31,500 |
| HS-6 | 5.0 | 904 | 23,000 | 6.3 | 1182 | 31,700 |
| AA#5 | 5.4 | 1021 | 24,600 | 6.0 | 1136 | 30,300 |

**#356402**
120 gr. (#2 Alloy) 1.110" OAL
**BC:** .146
**SD:** .135

| Powder | Sugg Starting Grains | Velocity fps | Pressure C.U.P. | Max Load Grains | Velocity fps | Pressure C.U.P. |
|---|---|---|---|---|---|---|
| Titegroup | 3.3 | 997 | 24,400 | 3.7 | 1109 | 32,200 |
| Bullseye | 3.8 | 1047 | 28,400 | 4.2 | 1124 | 31,200 |
| 700X | 3.6 | 1031 | 26,600 | 4.0 | 1115 | 31,800 |
| 231 | 2.9 | 963 | 17,000 | 4.4 | 1264 | 29,600 |
| Green Dot | 3.8 | 1038 | 28,000 | 4.3 | 1136 | 31,400 |
| **N340** | **4.0** | **986** | **23,300** | 4.5 | 1098 | 30,200 |
| Power Pistol | 5.1 | 1124 | 28,200 | 5.7 | 1209 | 31,600 |
| HS-6 | 5.0 | 910 | 20,000 | 6.2 | 1163 | 29,300 |
| AA#5 | 5.4 | 1030 | 24,600 | 6.0 | 1150 | 31,100 |

**#358093**
125 gr. (#2 Alloy) 1.115" OAL
**BC:** .079
**SD:** .141

| Powder | Sugg Starting Grains | Velocity fps | Pressure C.U.P. | Max Load Grains | Velocity fps | Pressure C.U.P. |
|---|---|---|---|---|---|---|
| Clays | 2.2 | 863 | 25,100 | 3.1 | 1030 | 30,800 |
| Titegroup | 2.9 | 1002 | 26,800 | 3.3 | 1082 | 29,500 |
| Bullseye | 3.3 | 1011 | 28,700 | 3.9 | 1130 | 31,400 |
| 700X | 2.8 | 948 | 25,000 | 3.5 | 1069 | 31,200 |
| 231 | 3.2 | 946 | 27,600 | 4.2 | 1116 | 30,000 |
| Unique | 3.4 | 1004 | 27,400 | 4.5 | 1195 | 32,600 |
| **N340** | **3.6** | **1037** | **29,200** | 4.0 | 1122 | 31,900 |
| WSF | 3.5 | 950 | 28,300 | 4.7 | 1158 | 30,900 |
| SR-4756 | 3.4 | 918 | 25,100 | 4.5+ | 1110 | 31,600 |
| AA#5 | 4.9 | 1063 | 26,500 | 5.5 | 1136 | 31,300 |
| Power Pistol | 4.8 | 1129 | 30,000 | 5.4 | 1202 | 32,300 |
| HS-6 | 4.8 | 1028 | 27,100 | 5.8+ | 1175 | 32,600 |

**#356637**
147 gr. (#2 Alloy) 1.058" OAL
**BC:** .073
**SD:** .166

| Powder | Sugg Starting Grains | Velocity fps | Pressure C.U.P. | Max Load Grains | Velocity fps | Pressure C.U.P. |
|---|---|---|---|---|---|---|
| Clays | 1.9 | 669 | 21,000 | 2.8+ | 873 | 31,700 |
| Titegroup | 2.5 | 870 | 26,800 | 2.8 | 943 | 30,300 |
| Bullseye | 2.8 | 780 | 24,900 | 3.5 | 942 | 31,600 |
| 700X | 2.7 | 803 | 26,500 | 3.3 | 921 | 32,200 |
| Universal | 3.0 | 875 | 26,300 | 3.4 | 969 | 31,000 |
| Unique | 3.2 | 810 | 25,600 | 3.8 | 956 | 31,800 |
| N340 | 3.4 | 894 | 25,400 | 3.8 | 954 | 29,900 |
| WSF | 3.4 | 867 | 26,900 | 3.9 | 961 | 32,100 |
| SR-4756 | 3.1 | 769 | 25,000 | 3.6 | 896 | 30,700 |
| **Power Pistol** | 4.1 | 939 | 26,100 | **4.6** | **1033** | **30,200** |
| HS-6 | 4.4 | 846 | 26,700 | 5.0 | 968 | 31,900 |
| AA#7 | 6.3 | 986 | 26,500 | 7.1 | 1061 | 29,300 |
| Blue Dot | 5.1 | 864 | 26,700 | 5.9 | 980 | 31,200 |

**Note:** Loads shown in shaded panels are maximum.
Loads shown in bold designate potentially most accurate load.
+ Designates a compressed powder charge.

# 38 Super Automatic

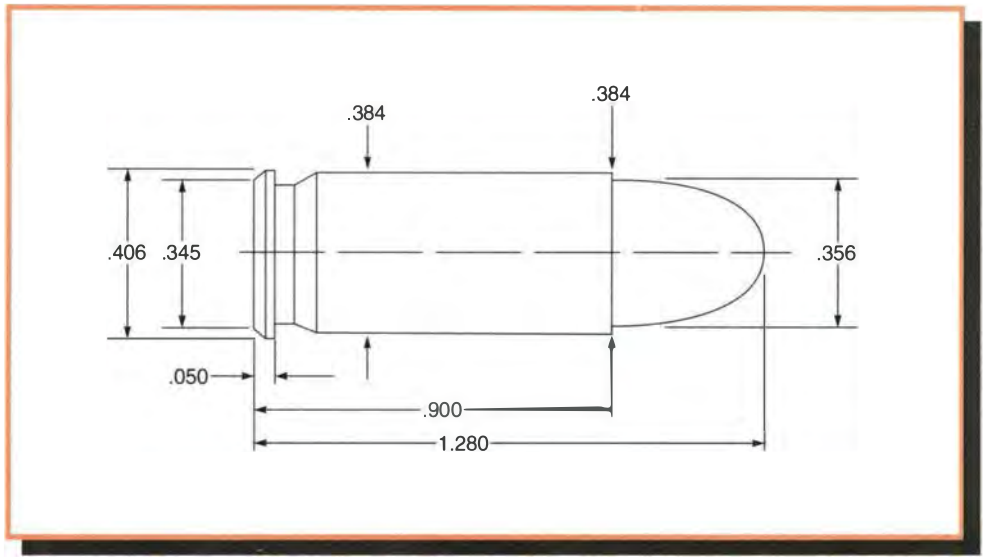


**Comments:**

Use this data only in pistols specifically marked 38 Super by the manufacturer. This data would be extremely dangerous if used in a pistol marked 38 Automatic. The 38 Automatic uses the same size case but loaded to much lower chamber pressures.

This has traditionally been a semi-rimless case that headspaces on the small rim. Some modern pistols and replacement barrels headspace on the case mouth. If your handgun headspaces on the case mouth do not roll crimp.

38 Super has become extremely popular with IPSC shooters due to its lower recoil which allows for faster recovery time.

**Test Components:**

Cases . . . . . .Remington
Trim-to Length . . . . . .895"
Primers . . . . . .CCI 500
Winchester WSP (Cast Bullets Only)
Primer Size . . . . . .Small Pistol
Lyman Shell Holder . . . . . .No. 12
Jacketed Bullets Used . . . . . .Sierra JHP #8100, 90 gr.
Hornady FMJ #35527, 100 gr.
Hornady HP/XTP #35540, 115 gr.
Hornady FMJ/FP #35567, 124 gr.
Sierra FMJ #8345, 130 gr.
Speer TMJ #4006, 147 gr.

Cast Bullets Used . . . . . .(sized to .355" dia)
*gas check bullet #356242, 90 gr.
#356242, 120 gr.
#356402, 120 gr.
*#358093, 125 gr.
#356637, 147 gr.
#358311, 158 gr.

**Test Specifications:**
**(Velocity & Pressure)**

Firearm Used . . . . . .Universal Receiver
Barrel Length . . . . . .5"
Twist . . . . . .1-16"
Groove Dia. . . . . .355"

**90 gr. Jacketed HP**
1.125" OAL
**BC:** .095
**SD:** .102

| Powder | Sugg Starting Grains | Velocity fps | Pressure C.U.P. | Max Load Grains | Velocity fps | Pressure C.U.P. |
|---|---|---|---|---|---|---|
| Titegroup | 5.3 | 1382 | 26,500 | 5.9 | 1518 | 32,500 |
| Bullseye | 5.0 | 1222 | 17,600 | 6.8 | 1472 | 30,600 |
| PB | 5.5 | 1193 | 20,400 | 7.3 | 1482 | 29,900 |
| **231** | 5.5 | 1198 | 20,500 | **6.9** | **1383** | **30,400** |
| Unique | 6.0 | 1221 | 19,400 | 7.1 | 1409 | 30,000 |
| Power Pistol | 7.1 | 1393 | 24,600 | 7.9 | 1550 | 30,000 |
| SR-7625 | 6.0 | 1203 | 21,200 | 7.8 | 1515 | 30,600 |
| Herco | 6.0 | 1193 | 17,500 | 8.2 | 1544 | 30,500 |
| N340 | 6.5 | 1354 | 22,500 | 7.3 | 1499 | 32,000 |
| HS-6 | 7.5 | 1210 | 20,000 | 9.4 | 1550 | 30,500 |

**100 gr. FMJ**
1.210" OAL
**BC:** .115
**SD:** .113

| Powder | Sugg Starting Grains | Velocity fps | Pressure C.U.P. | Max Load Grains | Velocity fps | Pressure C.U.P. |
|---|---|---|---|---|---|---|
| Titegroup | 5.0 | 1248 | 22,000 | 5.7 | 1368 | 29,200 |
| Bullseye | 5.7 | 1243 | 24,800 | 6.4 | 1364 | 29,800 |
| 700X | 4.6 | 1136 | 21,800 | 6.5 | 1358 | 31,400 |
| PB | 5.3 | 1153 | 21,100 | 7.0 | 1333 | 30,400 |
| **231** | 5.5 | 1101 | 18,700 | **6.5** | **1303** | **28,900** |
| Unique | 5.8 | 1126 | 18,800 | 7.1 | 1343 | 31,000 |
| Power Pistol | 7.0 | 1300 | 22,600 | 7.8 | 1466 | 30,700 |
| Herco | 6.1 | 1141 | 19,600 | 7.9 | 1397 | 31,100 |
| N340 | 6.3 | 1076 | 17,700 | 7.1 | 1413 | 32,200 |
| HS-6 | 7.5 | 1172 | 17,800 | 9.3 | 1433 | 30,800 |

**Note:** Loads shown in shaded panels are maximum.
Loads shown in bold designate potentially most accurate load.

# 38 Super Automatic

**115 gr. Jacketed HP**
1.265" OAL
**BC:** .129
**SD:** .130

| Powder | Sugg Starting Grains | Velocity fps | Pressure C.U.P. | Max Load Grains | Velocity fps | Pressure C.U.P. |
|---|---|---|---|---|---|---|
| Bullseye | 5.0 | 1084 | 19,100 | 6.2 | 1182 | 31,300 |
| 700X | 4.4 | 1032 | 20,200 | 6.0 | 1202 | 32,600 |
| 231 | 5.4 | 933 | 20,500 | 6.1 | 1209 | 31,200 |
| **Unique** | **5.4** | **1039** | **19,900** | 6.9 | 1186 | 30,700 |
| Power Pistol | 6.6 | 1067 | 21,500 | 7.4 | 1334 | 30,700 |
| SR-7625 | 5.3 | 1042 | 19,200 | 6.6 | 1195 | 31,900 |
| Herco | 5.6 | 1039 | 19,600 | 6.9 | 1200 | 30,600 |
| N340 | 5.8 | 1051 | 22,900 | 6.5 | 1295 | 31,600 |
| WSF | 6.3 | 1002 | 19,400 | 7.1 | 1296 | 31,300 |
| HS-6 | 7.9 | 1020 | 22,700 | 8.8 | 1296 | 30,700 |

**124 gr. FMJ/FP**
1.165" OAL
**BC:** .174
**SD:** .141

| Powder | Sugg Starting Grains | Velocity fps | Pressure C.U.P. | Max Load Grains | Velocity fps | Pressure C.U.P. |
|---|---|---|---|---|---|---|
| Bullseye | 4.0 | 842 | 19,500 | 5.1 | 1125 | 29,600 |
| **231** | 4.4 | 879 | 22,400 | **5.5** | **1132** | **31,300** |
| Unique | 4.5 | 776 | 16,600 | 5.8 | 1123 | 31,200 |
| AA#5 | 5.7 | 908 | 19,300 | 6.7 | 1175 | 29,400 |
| Power Pistol | 6.0 | 1000 | 24,700 | 6.9 | 1283 | 31,700 |
| Herco | 4.8 | 801 | 18,200 | 6.0 | 1123 | 30,900 |
| WSF | 5.5 | 961 | 23,100 | 6.2 | 1148 | 32,500 |
| SR-4756 | 4.7 | 737 | 12,900 | 5.9 | 1156 | 31,000 |
| HS-6 | 7.0 | 980 | 26,200 | 7.8 | 1184 | 29,800 |
| HS-7 | 7.0 | 816 | 16,000 | 8.8 | 1212 | 29,900 |
| AA#7 | 8.5 | 1051 | 22,700 | 9.5 | 1242 | 30,600 |
| Blue Dot | 6.5 | 904 | 20,400 | 8.3 | 1248 | 31,800 |
| N105 | 8.2 | 983 | 20,100 | 9.2+ | 1303 | 31,000 |

**130 gr. FMJ**
1.280" OAL
**BC:** .160
**SD:** .147

| Powder | Sugg Starting Grains | Velocity fps | Pressure C.U.P. | Max Load Grains | Velocity fps | Pressure C.U.P. |
|---|---|---|---|---|---|---|
| Bullseye | 4.3 | 855 | 19,800 | 5.4 | 1095 | 30,300 |
| 231 | 4.5 | 847 | 21,300 | 5.7 | 1100 | 31,500 |
| Unique | 4.8 | 771 | 16,800 | 6.1 | 1089 | 31,300 |
| **Power Pistol** | 6.1 | 894 | 22,000 | **6.8** | **1131** | **30,700** |
| Herco | 5.0 | 766 | 17,900 | 6.2 | 1050 | 31,200 |
| WSF | 5.6 | 842 | 21,400 | 6.2 | 1119 | 31,800 |
| SR-4756 | 5.0 | 747 | 13,500 | 6.1 | 1083 | 28,000 |
| AA#7 | 7.8 | 814 | 14,600 | 9.4 | 1150 | 30,000 |
| Blue Dot | 6.6 | 790 | 15,700 | 8.3 | 1183 | 31,600 |
| AA#9 | 10.8 | 1118 | 27,200 | 12.0+ | 1304 | 30,700 |

**147 gr. TMJ**
1.280" OAL
**BC:** .208
**SD:** .167

| Powder | Sugg Starting Grains | Velocity fps | Pressure C.U.P. | Max Load Grains | Velocity fps | Pressure C.U.P. |
|---|---|---|---|---|---|---|
| Bullseye | 4.3 | 972 | 22,000 | 5.0 | 1078 | 28,200 |
| 231 | 4.5 | 966 | 20,300 | 5.5 | 1098 | 30,200 |
| Unique | 4.7 | 962 | 21,300 | 5.5 | 1097 | 28,900 |
| Power Pistol | 5.6 | 831 | 24,300 | 6.3 | 1016 | 30,100 |
| Universal | 4.5 | 659 | 17,500 | 5.2 | 946 | 32,200 |
| Herco | 5.0 | 940 | 19,500 | 5.7 | 1080 | 27,800 |
| **WSF** | **5.2** | **771** | **24,100** | 5.8 | 939 | 30,500 |
| SR-4756 | 5.0 | 895 | 16,300 | 5.8 | 1086 | 27,600 |
| AA#7 | 8.3 | 1047 | 21,500 | 9.1 | 1160 | 28,600 |
| Blue Dot | 7.0 | 1051 | 24,900 | 7.8 | 1134 | 28,900 |
| AA#9 | 9.3 | 883 | 22,000 | 10.5 | 1126 | 30,100 |
| N105 | 7.8 | 896 | 21,600 | 8.7 | 1144 | 29,600 |

***#356242**
90 gr. (#2 Alloy) 1.175" OAL
**BC:** .105
**SD:** .102

| Powder | Sugg Starting Grains | Velocity fps | Pressure C.U.P. | Max Load Grains | Velocity fps | Pressure C.U.P. |
|---|---|---|---|---|---|---|
| Bullseye | 4.2 | 1022 | 19,500 | 5.6 | 1261 | 30,900 |
| HP-38 | 4.1 | 1026 | 20,600 | 5.8 | 1246 | 30,500 |
| **231** | 4.7 | 1039 | 20,300 | **6.3** | **1282** | **31,600** |
| PB | 4.3 | 1009 | 18,900 | 5.7 | 1222 | 30,500 |
| Unique | 5.1 | 1061 | 20,400 | 6.3 | 1267 | 30,500 |
| AA#5 | 8.3 | 1323 | 23,900 | 9.3 | 1443 | 30,200 |
| Power Pistol | 7.4 | 1363 | 25,100 | 8.3 | 1488 | 30,200 |
| SR-4756 | 5.9 | 1089 | 19,700 | 7.1 | 1263 | 30,300 |

***#356242**
120 gr. (#2 Alloy) 1.160" OAL
**BC:** .154
**SD:** .136

| Powder | Sugg Starting Grains | Velocity fps | Pressure C.U.P. | Max Load Grains | Velocity fps | Pressure C.U.P. |
|---|---|---|---|---|---|---|
| Bullseye | 3.9 | 970 | 17,600 | 5.4 | 1214 | 29,200 |
| 700X | 3.7 | 979 | 19,800 | 5.3 | 1206 | 29,200 |
| 231 | 4.3 | 988 | 17,700 | 5.8 | 1233 | 29,600 |
| HP-38 | 3.9 | 975 | 17,800 | 5.6 | 1230 | 29,400 |
| AA#5 | 6.9 | 1052 | 24,300 | 7.7 | 1302 | 32,200 |
| Unique | 4.9 | 1031 | 20,000 | 6.4 | 1281 | 28,800 |
| **Power Pistol** | **6.1** | **1128** | **24,900** | 6.8 | 1326 | 32,400 |
| SR-7625 | 4.2 | 978 | 18,100 | 5.8 | 1230 | 29,300 |

**Note:** Loads shown in shaded panels are maximum.
Loads shown in bold designate potentially most accurate load.
* Designates use of Winchester primers.
\+ Designates a compressed powder charge.

# 38 Super Automatic

***#356402**
120 gr. (#2 Alloy) 1.230" OAL
**BC:** .146
**SD:** .136

| Powder | Sugg Starting Grains | Velocity fps | Pressure C.U.P. | Max Load Grains | Velocity fps | Pressure C.U.P. |
|---|---|---|---|---|---|---|
| Bullseye | 4.0 | 1005 | 18,600 | 5.3 | 1235 | 30,000 |
| 700X | 4.0 | 1025 | 20,600 | 5.5 | 1252 | 29,900 |
| **231** | 5.0 | 1092 | 20,700 | **6.5** | **1307** | **30,800** |
| HP-38 | 4.4 | 1063 | 20,900 | 5.9 | 1267 | 29,700 |
| AA#5 | 6.9 | 1016 | 23,900 | 7.7 | 1227 | 29,800 |
| Unique | 5.1 | 1075 | 20,400 | 6.0 | 1255 | 31,000 |
| Power Pistol | 5.9 | 1041 | 24,100 | 6.6 | 1285 | 30,700 |
| SR-7625 | 5.1 | 1099 | 20,600 | 6.6 | 1274 | 29,900 |

***#358093**
125 gr. (#2 Alloy) 1.250" OAL
**BC:** .079
**SD:** .142

| Powder | Sugg Starting Grains | Velocity fps | Pressure C.U.P. | Max Load Grains | Velocity fps | Pressure C.U.P. |
|---|---|---|---|---|---|---|
| Bullseye | 3.5 | 963 | 19,800 | 4.6 | 1155 | 30,000 |
| 700X | 3.8 | 1042 | 22,800 | 5.0 | 1239 | 31,500 |
| 231 | 4.7 | 1134 | 23,600 | 5.8 | 1282 | 29,900 |
| AA#5 | 5.0 | 1030 | 17,400 | 6.3 | 1267 | 31,100 |
| Unique | 4.0 | 1021 | 22,700 | 5.1 | 1236 | 31,500 |
| Power Pistol | 5.9 | 1140 | 28,700 | 6.6 | 1278 | 32,000 |
| HS-6 | 6.0 | 1110 | 21,300 | 7.2 | 1287 | 29,600 |
| **Blue Dot** | **6.8** | **1149** | **24,300** | 8.0+ | 1287 | 30,600 |

***#356637**
147 gr. (#2 Alloy) 1.224" OAL
**BC:** .073
**SD:** .167

| Powder | Sugg Starting Grains | Velocity fps | Pressure C.U.P. | Max Load Grains | Velocity fps | Pressure C.U.P. |
|---|---|---|---|---|---|---|
| Bullseye | 4.3 | 793 | 24,300 | 4.8 | 940 | 31,300 |
| Unique | 4.5 | 791 | 22,900 | 5.2 | 954 | 31,300 |
| Universal | 4.2 | 702 | 21,700 | 4.7 | 876 | 31,500 |
| Herco | 4.9 | 830 | 25,200 | 5.7 | 928 | 31,200 |
| HS-7 | 6.7 | 877 | 23,900 | 7.7 | 1048 | 31,400 |
| **AA#7** | 7.5 | 862 | 22,200 | **8.9** | **1100** | **31,200** |
| Blue Dot | 6.6 | 869 | 24,000 | 7.6 | 1061 | 31,200 |
| AA#9 | 9.4 | 907 | 24,500 | 10.5+ | 1087 | 31,000 |

***#358311**
158 gr. (#2 Alloy) 1.245" OAL
**BC:** .228
**SD:** .179

| Powder | Sugg Starting Grains | Velocity fps | Pressure C.U.P. | Max Load Grains | Velocity fps | Pressure C.U.P. |
|---|---|---|---|---|---|---|
| Unique | 4.4 | 958 | 20,100 | 5.1 | 1058 | 28,100 |
| Herco | 4.5 | 920 | 21,000 | 5.4 | 1058 | 29,000 |
| SR-4756 | 4.9 | 927 | 18,900 | 5.8 | 1085 | 29,800 |
| AA#7 | 7.2 | 873 | 24,500 | 8.0 | 1035 | 32,000 |
| HS-7 | 6.8 | 956 | 20,200 | 8.3 | 1100 | 28,200 |
| Blue Dot | 6.5 | 987 | 20,900 | 7.6 | 1133 | 28,400 |
| **AA#9** | 8.9 | 875 | 23,300 | **9.9+** | **1037** | **28,200** |

**Note:** Loads shown in shaded panels are maximum.
Loads shown in bold designate potentially most accurate load.
* Designates use of Winchester primers.
\+ Designates a compressed powder charge.

# 9 x 21 mm

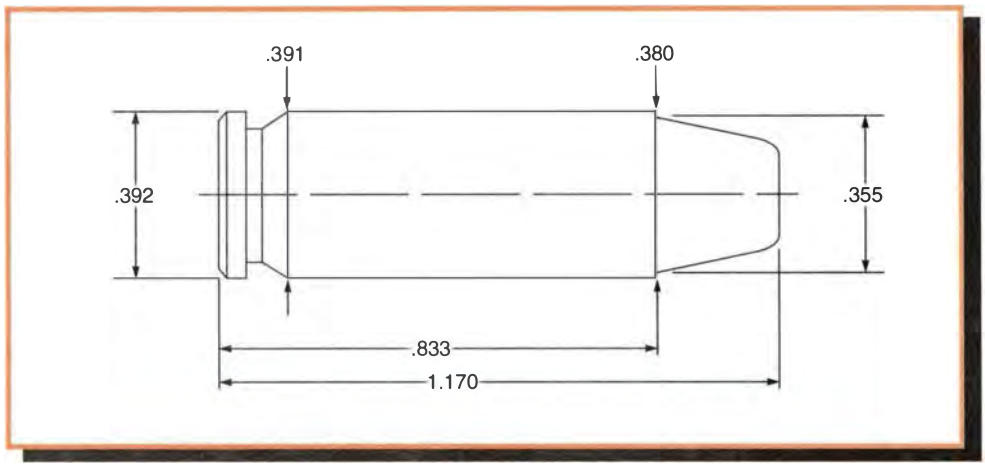


**Comments:**

The 9x21mm originated in Italy, due to a law which prohibits civilians from owning firearms chambering military calibers. Since this law banned the 9mm Luger (9x19mm), the answer for shooters desiring a 9mm was to lengthen the Luger case by 2mm creating the 9x21mm.

In this country, IPSC shooters have adopted this cartridge to make major power requirements which can not be safely reached with the 9mm Luger. Even though the 9x21mm case is longer than the 9mm Luger, the same overall cartridge length was maintained to allow for the easy conversion of 9mm Luger handguns. If this overall length is maintained, it is difficult to obtain major loads without exceeding the 33,000 c.u.p. S.A.A.M.I. pressure limit set for 9mm Luger firearms.

Since most IPSC shooters fire well-built custom handguns, they often exceed this limit, but we choose not to, as quality of the firearm to be used is not known to us.

Within this limit we have one 147 gr. jacketed bullet load which meets major requirements.

For lightweight bullets, we found 231 to work very well. For heavier bullets, try Blue Dot, HS-6 or AA 7.

**Test Components:**

Cases . . . . . .Geco
Trim-to Length . . . . . .830"
Primers . . . . . .Winchester WSP
Primer Size . . . . . .Small Pistol
Lyman Shell Holder . . . . . .No. 12
Jacketed Bullets Used . . . . . .Sierra JHP #8100, 90 gr.
Sierra JHP #8110, 115 gr.
Hornady FMJ/FP #35567, 124 gr.
Sierra FMJ #8345, 130 gr.
Speer TMJ #4006, 147 gr.
Cast Bullets Used. . . . . .(sized to .355" dia)
#356402, 120 gr.
#356637, 147 gr.

**Test Specifications:**
**(Velocity & Pressure)**

Firearm Used . . . . . .Universal Receiver
Barrel Length . . . . . .5"
Twist . . . . . .1-16"
Groove Dia. . . . . .355"

**90 gr. Jacketed HP**
1.063" OAL
**BC:** .115
**SD:** .102

| Powder | Sugg Starting Grains | Velocity fps | Pressure C.U.P. | Max Load Grains | Velocity fps | Pressure C.U.P. |
|---|---|---|---|---|---|---|
| 700X | 4.5 | 1127 | 21,000 | 5.9 | 1419 | 31,800 |
| SR-4756 | 6.9 | 1293 | 22,500 | 8.0+ | 1480 | 31,000 |
| Bullseye | 5.5 | 1290 | 26,000 | 7.2 | 1446 | 31,700 |
| Unique | 5.2 | 1219 | 23,200 | 6.6 | 1402 | 32,000 |
| Blue Dot | 8.7 | 1349 | 24,900 | 10.2+ | 1482 | 28,600 |
| HS-6 | 7.7 | 1274 | 23,800 | 9.0 | 1411 | 31,700 |
| AA#5 | 6.5 | 1195 | 20,300 | 7.8 | 1463 | 31,500 |
| **231** | 5.2 | 1234 | 24,000 | **6.5** | **1456** | **30,800** |

**115 gr. Jacketed HP**
1.063" OAL
**BC:** .155
**SD:** .130

| Powder | Sugg Starting Grains | Velocity fps | Pressure C.U.P. | Max Load Grains | Velocity fps | Pressure C.U.P. |
|---|---|---|---|---|---|---|
| 700X | 4.0 | 882 | 22,000 | 5.5 | 1295 | 31,500 |
| SR-4756 | 5.8 | 1119 | 24,600 | 7.0+ | 1323 | 32,800 |
| Bullseye | 4.5 | 935 | 23,000 | 5.8 | 1234 | 29,600 |
| Unique | 5.0 | 995 | 24,800 | 6.2 | 1317 | 31,000 |
| **Blue Dot** | 8.0 | 1180 | 25,100 | **9.3+** | **1333** | **29,400** |
| HS-6 | 6.8 | 1048 | 24,400 | 8.1 | 1305 | 31,300 |
| AA#7 | 8.0 | 979 | 20,500 | 10.0 | 1330 | 30,000 |
| 231 | 5.0 | 1028 | 25,200 | 6.3 | 1266 | 31,500 |

**Note:** Loads shown in shaded panels are maximum.
Loads shown in bold designate potentially most accurate load.
\+ Designates a compressed powder charge.

# 9 x 21 mm

**124 gr. FMJ/FP**
1.090" OAL
**BC:** .174
**SD:** .141

| Powder | Sugg Starting Grains | Velocity fps | Pressure C.U.P. | Max Load Grains | Velocity fps | Pressure C.U.P. |
|---|---|---|---|---|---|---|
| 700X | 4.0 | 868 | 22,000 | 5.4 | 1235 | 31,500 |
| SR-4756 | 5.0 | 887 | 20,800 | 6.5 | 1222 | 31,000 |
| Bullseye | 4.2 | 853 | 20,000 | 5.7 | 1242 | 29,400 |
| Unique | 4.5 | 909 | 20,500 | 5.8 | 1259 | 31,100 |
| Blue Dot | 7.3 | 1066 | 24,100 | 8.7+ | 1291 | 30,400 |
| HS-6 | 6.5 | 937 | 21,500 | 7.8 | 1289 | 31,700 |
| AA#7 | 7.3 | 928 | 19,800 | 9.8 | 1335 | 32,100 |
| **231** | 4.5 | 930 | 20,000 | **6.1** | **1235** | **30,100** |

**130 gr. FMJ**
1.169" OAL
**BC:** .160
**SD:** .147

| Powder | Sugg Starting Grains | Velocity fps | Pressure C.U.P. | Max Load Grains | Velocity fps | Pressure C.U.P. |
|---|---|---|---|---|---|---|
| 700X | 3.7 | 761 | 18,500 | 5.1 | 1069 | 31,400 |
| WSF | 5.5 | 918 | 25,500 | 6.4 | 1128 | 31,500 |
| Bullseye | 4.0 | 811 | 19,800 | 5.6 | 1021 | 29,100 |
| Unique | 5.2 | 947 | 20,600 | 6.3 | 1179 | 29,200 |
| Blue Dot | 7.2 | 964 | 23,800 | 8.5 | 1247 | 31,100 |
| HS-6 | 6.5 | 898 | 21,900 | 7.7 | 1173 | 29,400 |
| **AA#7** | 8.1 | 964 | 23,000 | **9.7** | **1284** | **31,800** |
| 231 | 4.6 | 873 | 23,500 | 5.6 | 1141 | 31,400 |

**147 gr. TMJ**
1.169" OAL
**BC:** .208
**SD:** .167

| Powder | Sugg Starting Grains | Velocity fps | Pressure C.U.P. | Max Load Grains | Velocity fps | Pressure C.U.P. |
|---|---|---|---|---|---|---|
| WSF | 5.1 | 856 | 24,700 | 6.2 | 1144 | 33,000 |
| 231 | 4.2 | 762 | 20,000 | 5.4 | 1047 | 31,400 |
| Blue Dot | 5.7 | 642 | 20,000 | 7.8 | 1100 | 31,400 |
| HS-6 | 5.9 | 785 | 24,400 | 7.4 | 1159 | 33,000 |
| **AA#7** | 7.4 | 856 | 24,600 | **9.2** | **1228** | **33,000** |

**#356402**
120 gr. (#2 Alloy) 1.169" OAL
**BC:** .146
**SD:** .136

| Powder | Sugg Starting Grains | Velocity fps | Pressure C.U.P. | Max Load Grains | Velocity fps | Pressure C.U.P. |
|---|---|---|---|---|---|---|
| 700X | 3.6 | 868 | 23,900 | 5.2 | 1292 | 34,000 |
| SR-4756 | 4.8 | 826 | 18,100 | 6.0 | 1228 | 29,500 |
| Bullseye | 3.8 | 836 | 18,200 | 5.4 | 1242 | 29,700 |
| Unique | 4.3 | 888 | 21,000 | 5.6 | 1269 | 31,000 |
| Blue Dot | 7.0 | 1031 | 23,200 | 8.4+ | 1279 | 29,500 |
| HS-6 | 6.1 | 934 | 20,500 | 7.4 | 1287 | 31,800 |
| AA#5 | 5.4 | 951 | 20,800 | 6.5 | 1268 | 31,800 |
| **231** | **4.1** | **870** | **20,000** | 5.7 | 1252 | 30,300 |

**#356637**
147 gr. (#2 Alloy) 1.119" OAL
**BC:** .073
**SD:** .167

| Powder | Sugg Starting Grains | Velocity fps | Pressure C.U.P. | Max Load Grains | Velocity fps | Pressure C.U.P. |
|---|---|---|---|---|---|---|
| SR-4756 | 4.0 | 767 | 23,300 | 4.7 | 930 | 31,800 |
| Bullseye | 3.4 | 700 | 22,600 | 4.5 | 1005 | 32,200 |
| Unique | 3.3 | 667 | 22,300 | 4.4 | 925 | 30,100 |
| Blue Dot | 5.1 | 775 | 18,900 | 7.0 | 1037 | 29,300 |
| **HS-6** | **4.6** | **683** | **22,200** | 6.0 | 1040 | 31,500 |
| AA#7 | 6.0 | 705 | 18,800 | 8.0 | 1089 | 29,600 |
| 231 | 3.0 | 756 | 22,000 | 5.0 | 1065 | 31,300 |

**Note:** Loads shown in shaded panels are maximum.
Loads shown in bold designate potentially most accurate load.
\+ Designates a compressed powder charge.

# 357 SIG

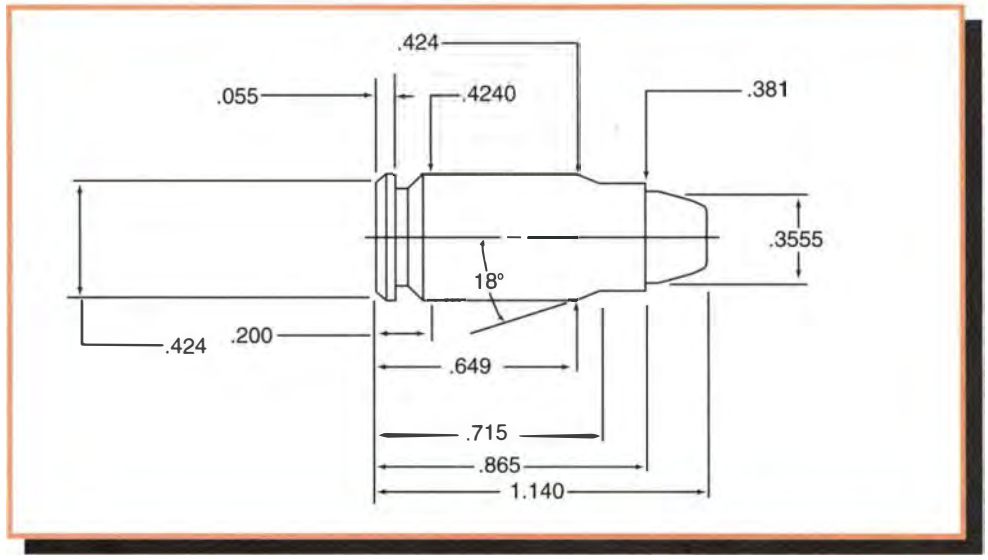


**Comments:**

The 357 SIG resulted from a joint effort between SIG Arms and Federal Cartridge to produce 357 Magnum level ballistics in a mid-size semiautomatic pistol. The simplest description of the 357 SIG is that of a 40 Smith & Wesson necked down to accept .355" diameter bullets. Reloaders should not however attempt to form brass by necking down 40 S&W cases, as they will be approximately .020" short. 10mm cases should also not be used due to their use of a large primer. Only .355" diameter bullets should be loaded for the SIG despite the 357 designation. Do not use .357" diameter bullets intended for use in the 38/357. The 357 SIG is a bottleneck cartridge but headspaces on the case mouth and cartridges should not be roll crimped. Uniform case length is imperative for proper functioning. Unfortunately, the short neck of the 357 SIG proved unsuitable for use with any of Lyman's cast bullets. The SAAMI Maximum Average Pressure (MAP) is 40,000 PSI.

**Test Components:**

Cases . . . . . .Federal
Trim-to Length . . . . . .860"
Primers . . . . . .Federal 100
Primer Size . . . . . .Small Pistol
Lyman Shell Holder . . . . . .No. 15
Jacketed Bullets Used . . . . . .Sierra JHP #8100, 90 gr.
Sierra JHP #8110, 115 gr.
Speer Gold Dot #4360, 125 gr.
Speer TMJ #4006, 147 gr.

**Test Specifications:**
**(Velocity & Pressure)**

Firearm Used . . . . . .Universal Receiver
Barrel Length . . . . . .4"
Twist . . . . . .1-16"
Groove Dia. . . . . .3553"

**90 gr. Jacketed HP**
1.140" OAL
**BC:** .095
**SD:** .102

| Powder | Sugg Starting Grains | Velocity fps | Pressure P.S.I. | Max Load Grains | Velocity fps | Pressure P.S.I. |
|---|---|---|---|---|---|---|
| AA#2 | 6.3 | 1280 | 30,800 | 7.0 | 1423 | 38,800 |
| **HP-38** | **7.3** | **1422** | **33,000** | 8.0 | 1537 | 38,300 |
| Amer. Select | 7.9 | 1395 | 33,600 | 8.8 | 1487 | 37,400 |
| AA#5 | 10.0 | 1422 | 30,200 | 11.0 | 1595 | 39,400 |
| Unique | 8.1 | 1420 | 31,700 | 9.0 | 1566 | 38,800 |
| Universal | 7.8 | 1343 | 26,600 | 8.7 | 1579 | 39,400 |
| N340 | 7.6 | 1288 | 27,300 | 8.5 | 1518 | 38,100 |
| Power Pistol | 9.7 | 1488 | 31,600 | 10.8 | 1656 | 38,900 |
| SR-4756 | 9.4 | 1451 | 34,300 | 10.5 | 1558 | 39,100 |
| HS-6 | 10.0 | 1289 | 25,900 | 11.0 | 1529 | 35,700 |
| AA#7 | 12.0 | 1419 | 29,100 | 13.5 | 1605 | 37,300 |
| N105 | 12.1 | 1399 | 26,300 | 13.5+ | 1627 | 36,900 |

**115 gr. Jacketed HP**
1.140" OAL
**BC:** .127
**SD:** .130

| Powder | Sugg Starting Grains | Velocity fps | Pressure P.S.I. | Max Load Grains | Velocity fps | Pressure P.S.I. |
|---|---|---|---|---|---|---|
| AA#5 | 8.8 | 1221 | 30,900 | 9.8 | 1364 | 38,600 |
| Unique | 6.9 | 1236 | 33,200 | 7.7 | 1331 | 38,800 |
| Universal | 6.4 | 1131 | 27,800 | 7.2 | 1305 | 38,400 |
| N340 | 6.5 | 1186 | 31,800 | 7.3 | 1298 | 38,200 |
| Power Pistol | 8.1 | 1287 | 32,700 | 9.0 | 1416 | 39,300 |
| SR-4756 | 8.2 | 1242 | 31,400 | 9.2 | 1372 | 39,300 |
| 800X | 8.5 | 1315 | 33,800 | 9.5 | 1415 | 38,200 |
| HS-6 | 9.0 | 1206 | 29,700 | 10.0 | 1369 | 38,600 |
| AA#7 | 10.0 | 1268 | 31,900 | 11.5 | 1409 | 38,700 |
| Blue Dot | 9.2 | 1235 | 31,000 | 10.3 | 1384 | 38,500 |
| N105 | 10.8 | 1331 | 31,100 | 12.0 | 1473 | 39,300 |
| **AA#9** | 12.4 | 1367 | 31,900 | **14.0** | **1512** | **38,700** |

**Note:** Loads shown in shaded panels are maximum.
Loads shown in bold designate potentially most accurate load.
\+ Designates a compressed powder charge.

**125 gr. Jacketed HP**
1.135" OAL
**BC:** .141
**SD:** .142

| Powder | Sugg Starting Grains | Velocity fps | Pressure P.S.I. | Max Load Grains | Velocity fps | Pressure P.S.I. |
|---|---|---|---|---|---|---|
| AA#5 | 8.5 | 1197 | 31,800 | 9.5 | 1314 | 38,300 |
| Unique | 6.6 | 1157 | 33,800 | 7.3 | 1227 | 37,300 |
| N340 | 6.4 | 1088 | 30,600 | 7.2 | 1229 | 38,100 |
| Power Pistol | 7.8 | 1196 | 32,000 | 8.7 | 1347 | 39,100 |
| SR-4756 | 7.8 | 1202 | 34,100 | 8.7 | 1293 | 38,300 |
| 800X | 8.5 | 1278 | 33,800 | 9.5 | 1394 | 39,300 |
| HS-6 | 8.2 | 1119 | 28,700 | 9.3 | 1310 | 38,300 |
| AA#7 | 10.0 | 1271 | 33,900 | 11.5 | 1389 | 39,500 |
| Blue Dot | 8.9 | 1160 | 30,900 | 9.9 | 1314 | 38,600 |
| **N105** | 10.1 | 1214 | 28,700 | **11.3** | **1381** | **38,400** |
| AA#9 | 11.5 | 1293 | 31,900 | 13.0+ | 1419 | 38,200 |

**147 gr. TMJ**
1.135" OAL
**BC:** .208
**SD:** .167

| Powder | Sugg Starting Grains | Velocity fps | Pressure P.S.I. | Max Load Grains | Velocity fps | Pressure P.S.I. |
|---|---|---|---|---|---|---|
| AA#5 | 7.3 | 968 | 32,600 | 8.2 | 1112 | 38,500 |
| Power Pistol | 6.7 | 1060 | 33,600 | 7.5 | 1198 | 38,400 |
| SR-4756 | 6.2 | 1030 | 34,300 | 6.9 | 1099 | 39,000 |
| 800X | 7.2 | 1141 | 35,200 | 8.0 | 1225 | 39,000 |
| HS-6 | 7.1 | 880 | 31,500 | 7.9 | 1080 | 38,800 |
| AA#7 | 9.0 | 1033 | 31,600 | 10.0 | 1227 | 39,500 |
| Blue Dot | 6.8 | 948 | 33,200 | 7.6 | 1086 | 37,200 |
| N105 | 8.1 | 1092 | 31,300 | 9.0 | 1185 | 38,400 |
| **AA#9** | 9.7 | 1166 | 32,200 | **11.0** | **1275** | **38,100** |

**Note:** Loads shown in shaded anels are maximum.
Loads shown in bold designate potentially most accurate load.
\+ Designates a compressed powder charge.

# 38 Smith & Wesson

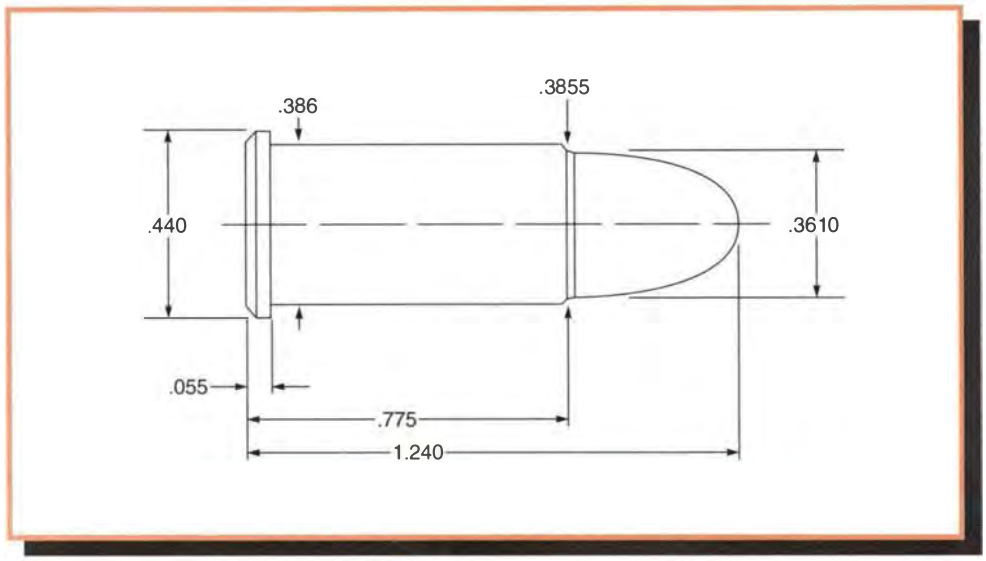


**Comments:**

The data listed is intended only for use in solid frame revolvers.

We do not recommend the use of reloads in revolvers of the top break design due to their age and relative weakness.

Because of wide internal barrel dimensions it is wise to slug your bore before beginning to reload. Size cast bullets to groove diameter or 0.001" larger. Then make up a dummy round to ensure that your revolver chambers will easily accept ammo with bullets of the chosen diameter.

The fastest burning propellants seem to work best. So, as with other small capacity cases, begin with either Bullseye or 231.

**Test Components:**

Cases . . . . . .Remington, Winchester
Trim-to Length . . . . . .765"
Primers . . . . . .Winchester WSP
Primer Size . . . . . .Small Pistol
Lyman Shell Holder . . . . . .No. 21
Cast Bullets Used . . . . . .(sized to .360" dia)
#356242, 120 gr.
#358311, 160 gr.

**Test Specifications:**
**(Velocity & Pressure)**

Firearm Used . . . . . .Universal Receiver
Smith & Wesson Model 33
Barrel Length . . . . . .4"
Twist . . . . . .1-18¾"
Groove Dia. . . . . .361"

**#356242**
120 gr. (#2 Alloy) 1.125" OAL
**BC:** .154
**SD:** .132

| Powder | Sugg Starting Grains | Velocity fps | Pressure C.U.P. | Max Load Grains | Velocity fps | Pressure C.U.P. |
|---|---|---|---|---|---|---|
| Bullseye | 2.0 | 560 | — | 3.0 | 805 | — |
| Unique | 3.5 | 700 | — | 4.5 | 945 | — |
| 700X | 2.3 | 680 | — | 3.1 | 895 | — |
| PB | 2.6 | 575 | — | 3.4 | 825 | — |
| SR-7625 | 2.7 | 580 | — | 3.5 | 830 | — |
| **231** | 2.0 | 610 | 6,900 | **2.8** | **798** | **12,400** |
| Red Dot | 2.4 | 650 | — | 3.2 | 855 | — |
| Green Dot | 2.5 | 615 | — | 3.3 | 815 | — |

**#358311**
160 gr. (#2 Alloy) 1.150" OAL
**BC:** .228
**SD:** .176

| Powder | Sugg Starting Grains | Velocity fps | Pressure C.U.P. | Max Load Grains | Velocity fps | Pressure C.U.P. |
|---|---|---|---|---|---|---|
| Bullseye | 1.8 | 545 | — | 2.6 | 730 | — |
| Red Dot | 2.1 | 605 | — | 2.8 | 770 | — |
| Green Dot | 2.2 | 595 | — | 2.9 | 745 | — |
| Unique | 3.2 | 715 | — | 3.7 | 805 | — |
| 700X | 2.1 | 665 | — | 2.6 | 785 | — |
| PB | 2.3 | 620 | — | 2.8 | 730 | — |
| SR-7625 | 2.4 | 660 | — | 2.9 | 770 | — |
| HS-7 | 3.6 | 619 | 8,100 | 4.5 | 749 | 11,900 |
| **231** | 1.5 | 486 | 4,600 | **2.5** | **727** | **12,400** |

**Note:** Loads shown in shaded panels are maximum.
Loads shown in bold designate potentially most accurate load.

# 38 Special

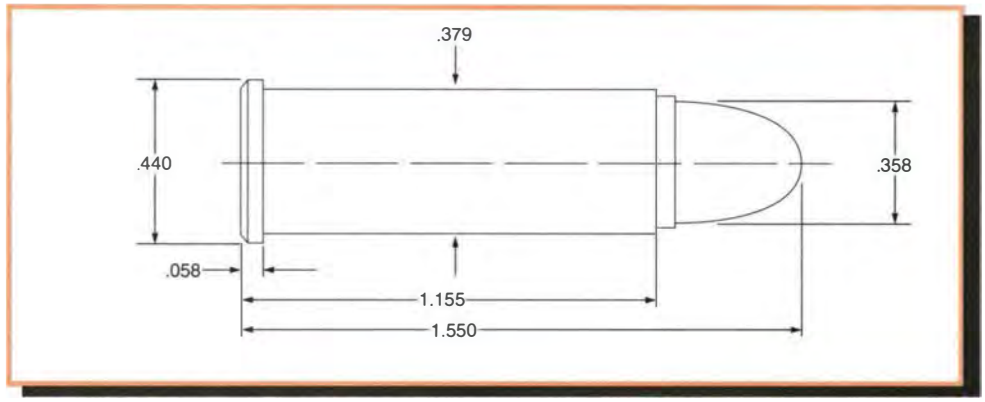


## Comments:

Loads designated with a +P symbol are higher pressure loads and must not be used in standard 38 Special revolvers unless the firearm manufacturer has suggested the use of such ammunition in your specific revolver. This caution should not be ignored. Under no circumstance should +P (plus P) ammo be used in revolvers with aluminum frames and/or aluminum cylinders.

Do not use charge weights below the starting load to prevent bullet jackets from half jacket bullets from becoming lodged in the barrel (the lead cores may exit the muzzle and strike the target). To crimp half jacket bullets, form the crimp at the junction of the jacket and exposed lead nose.

For target (mid-range) loads we suggest bullet #358091 with the suggested starting grains load. Bullet #358311 duplicates the factory lead round nose 158 grain bullet very closely. Bullet #358429 closely duplicates the factory 158 grain semi-wadcutter. This is the Elmer Keith design bullet and makes an excellent choice for hunting.

Handguns can vary in groove diameter and it is wise to slug your barrel before sizing cast bullets.

Bullseye and 231 consistently provide the best accuracy with all bullets.

## Test Components:

Cases . . . . . .Federal
Trim-to Length . . . . . .1.149"
Primers . . . . . .CCI 500
Primer Size . . . . . .Small Pistol
Lyman Shell Holder . . . . . No. 1
Jacketed Bullets Used . . . . .Speer JHP #4007, 110 gr.
Hornady JHP #35710, 125 gr.
Speer JHP #4203, 140 gr.
Speer JHP #4205, 146 gr.
Hornady JHP #35750, 158 gr.

Cast Bullets Used . . . . . .(sized to .358" dia)
*gas check bullet #356242, 90 gr.
#356242, 120 gr.
#358091, 150 gr.
*#358156, 155 gr.
#358665, 158 gr.
#358311, 160 gr.
#358429, 170 gr.

## Test Specifications: (Velocity & Pressure)

Firearm Used . . . . . .Universal Receiver
Barrel Length . . . . . .4"
Twist . . . . . .1-18¾"
Groove Dia. . . . . .357"

**110 gr. Jacketed HP**
1.430" OAL
**BC:** .122
**SD:** .123

| Powder | Sugg Starting Grains | Velocity fps | Pressure C.U.P. | Max Load Grains | Velocity fps | Pressure C.U.P. |
|---|---|---|---|---|---|---|
| **Bullseye** | 4.0 | 836 | 12,200 | 4.5 | 895 | 14,300 |
| | | | | **(+P)5.2** | **1054** | **18,600** |
| 700X | 4.1 | 875 | 13,700 | 4.6 | 983 | 16,800 |
| 231 | 5.1 | 844 | 12,700 | 5.7 | 949 | 15,100 |
| | | | | (+P)6.3 | 1062 | 18,400 |
| Unique | 5.8 | 864 | 13,400 | 6.5 | 1007 | 15,700 |
| | | | | (+P)7.1 | 1101 | 17,900 |
| Power Pistol | 5.7 | 795 | 11,300 | 6.4 | 980 | 15,600 |
| | | | | (+P)6.7 | 1098 | 18,700 |
| SR-4756 | 5.8 | 675 | 9,100 | 7.3 | 980 | 16,400 |
| | | | | (+P)7.5 | 1027 | 17,500 |
| HS6 | 6.5 | 593 | 7,700 | 9.0 | 978 | 16,200 |
| | | | | (+P)9.5 | 1043 | 18,000 |
| Blue Dot | 7.9 | 822 | 12,400 | 8.8 | 938 | 14,900 |

**125 gr. Jacketed HP**
1.470" OAL
**BC:** .151
**SD:** .140

| Powder | Sugg Starting Grains | Velocity fps | Pressure C.U.P. | Max Load Grains | Velocity fps | Pressure C.U.P. |
|---|---|---|---|---|---|---|
| Clays | 3.2 | 719 | 11,800 | 3.8 | 870 | 15,900 |
| **Bullseye** | 3.2 | 568 | 10,200 | **4.4** | **860** | **16,500** |
| | | | | (+P5.0 | 920 | 18,300 |
| 700X | 2.8 | 473 | 8,100 | 4.1 | 814 | 16,500 |
| | | | | (+P)4.5 | 877 | 17,300 |
| AA#2 | 4.3 | 751 | 11,800 | 5.2 | 899 | 16,200 |
| 231 | 3.9 | 589 | 10,600 | 5.1 | 820 | 15,600 |
| | | | | (+P)5.4 | 882 | 18,300 |
| Unique | 4.0 | 498 | 8,000 | 6.0 | 895 | 16,700 |
| Power Pistol | 5.4 | 776 | 12,400 | 6.0 | 897 | 16,100 |
| | | | | (+P)6.4 | 1005 | 18,800 |
| SR-4756 | 4.8 | 535 | 7,400 | 6.3 | 874 | 16,200 |
| HS-6 | 5.6 | 600 | 9,400 | 7.4 | 862 | 16,100 |
| Blue Dot | 7.6 | 718 | 11,400 | 8.5 | 876 | 15,400 |

**Note:** Loads shown in shaded panels are maximum.
Loads shown in bold designate potentially most accurate load.
(+P) Designates higher pressure loads. See Comments.

# 38 Special

**140 gr. Jacketed HP**
1.470" OAL
**BC:** .152
**SD:** .157

| Powder | Sugg Starting Grains | Velocity fps | Pressure C.U.P. | Max Load Grains | Velocity fps | Pressure C.U.P. |
|---|---|---|---|---|---|---|
| Bullseye | 3.5 | 533 | 11,900 | 4.3 | 714 | 16,500 |
| **231** | 3.9 | 496 | 12,100 | **4.7** | **684** | **15,800** |
| Unique | 4.3 | 537 | 11,200 | 5.3 | 709 | 15,900 |
| SR-7625 | 4.2 | 505 | 10,800 | 5.1 | 715 | 16,100 |
| HS-6 | 5.6 | 526 | 11,200 | 7.2 | 777 | 16,700 |
| Blue Dot | 7.2 | 688 | 13,600 | 8.0 | 838 | 16,300 |

**146 gr. Jacketed HP**
1.408" OAL
**BC:** .159
**SD:** .163

| Powder | Sugg Starting Grains | Velocity fps | Pressure C.U.P. | Max Load Grains | Velocity fps | Pressure C.U.P. |
|---|---|---|---|---|---|---|
| **Unique** | 4.3 | 741 | 11,200 | 5.1 | 745 | 16,800 |
| | | | | **(+P)5.4** | **795** | **17,600** |
| Power Pistol | 4.7 | 756 | 14,500 | 5.0 | 811 | 16,200 |
| Herco | 5.0 | 711 | 15,100 | 5.2 | 744 | 15,900 |
| SR-4756 | 5.0 | 633 | 13,400 | 5.6 | 778 | 16,600 |
| HS-6 | 6.2 | 691 | 14,800 | 6.7 | 782 | 16,000 |
| Blue Dot | 6.7 | 595 | 12,500 | 7.4 | 772 | 16,600 |
| 2400 | 8.9 | 690 | 12,900 | 9.4 | 836 | 16,100 |

**158 gr. Jacketed HP**
1.480" OAL
**BC:** .206
**SD:** .177

| Powder | Sugg Starting Grains | Velocity fps | Pressure C.U.P. | Max Load Grains | Velocity fps | Pressure C.U.P. |
|---|---|---|---|---|---|---|
| Clays | 2.8 | 648 | 14,500 | 3.2 | 712 | 16,600 |
| **Unique** | 4.7 | 645 | 14,400 | 5.0 | 710 | 16,600 |
| | | | | **(+P)5.2** | **761** | **18,200** |
| AA#5 | 5.0 | 674 | 12,100 | 5.8 | 821 | 16,300 |
| Power Pistol | 4.3 | 659 | 14,800 | 4.8 | 700 | 15,600 |
| SR-4756 | 4.9 | 611 | 13,800 | 5.4 | 705 | 16,800 |
| HS-6 | 5.5 | 572 | 12,400 | 6.5 | 726 | 16,600 |
| Blue Dot | 6.0 | 607 | 13,500 | 6.7 | 711 | 15,700 |
| 2400 | 8.4 | 645 | 13,500 | 9.4 | 745 | 16,400 |

**#356242**
90 gr. (Linotype) 1.456" OAL
**BC:** .105
**SD:** .100

| Powder | Sugg Starting Grains | Velocity fps | Pressure C.U.P. | Max Load Grains | Velocity fps | Pressure C.U.P. |
|---|---|---|---|---|---|---|
| **700X** | 3.0 | 675 | 5,700 | **5.0** | **1107** | **15,700** |
| | | | | (+P)5.3 | 1168 | 18,300 |
| Bullseye | 3.3 | 765 | 7,600 | 5.3 | 1110 | 15,700 |
| | | | | (+P)5.6 | 1168 | 17,600 |
| Red Dot | 3.8 | 830 | 8,800 | 5.2 | 1108 | 16,300 |
| | | | | (+P)5.5 | 1154 | 17,700 |
| 231 | 3.5 | 689 | 5,900 | 5.7 | 1104 | 16,300 |
| | | | | (+P)6.0 | 1163 | 17,800 |
| Titegroup | 5.7 | 1006 | 10,300 | 6.4 | 1216 | 15,700 |

**#356242**
120 gr. (Linotype) 1.450" OAL
**BC:** .154
**SD:** .134

| Powder | Sugg Starting Grains | Velocity fps | Pressure C.U.P. | Max Load Grains | Velocity fps | Pressure C.U.P. |
|---|---|---|---|---|---|---|
| 700X | 2.5 | 647 | 7,600 | 3.9 | 940 | 16,200 |
| | | | | (+P)4.2 | 987 | 17,900 |
| **Bullseye** | 2.8 | 690 | 8,600 | **4.6** | **1001** | **16,400** |
| | | | | (+P)4.9 | 1045 | 18,400 |
| Red Dot | 3.3 | 749 | 10,100 | 4.6 | 974 | 16,200 |
| | | | | (+P)5.0 | 1047 | 18,400 |
| SR-7625 | 4.0 | 788 | 10,600 | 5.0 | 988 | 16,200 |
| 231 | 3.4 | 693 | 8,800 | 5.1 | 986 | 16,600 |
| | | | | (+P)5.4 | 1036 | 17,900 |
| Unique | 4.0 | 725 | 9,000 | 5.7 | 1012 | 16,200 |
| Titegroup | 3.8 | 900 | 12,700 | 4.3 | 1014 | 15,400 |

**#358091**
150 gr. (Linotype) 1.317" OAL
**BC:** .038
**SD:** .167

| Powder | Sugg Starting Grains | Velocity fps | Pressure C.U.P. | Max Load Grains | Velocity fps | Pressure C.U.P. |
|---|---|---|---|---|---|---|
| 700X | 2.9 | 854 | 13,300 | 3.3 | 917 | 15,500 |
| Bullseye | 3.1 | 837 | 13,100 | 3.5 | 925 | 16,400 |
| **Titegroup** | **3.1** | **854** | **13,600** | 3.5 | 942 | 16,000 |
| AA#2 | 3.1 | 829 | 12,700 | 3.5 | 899 | 15,800 |
| 231 | 3.7 | 872 | 14,400 | 4.2 | 942 | 16,200 |
| Unique | 3.7 | 820 | 13,000 | 4.2 | 894 | 14,300 |

**Note:** Loads shown in shaded panels are maximum.
Loads shown in bold designate potentially most accurate load.
(+P) Designates higher pressure loads. See Comments.

**#358156**
155 gr. (Linotype) 1.460" OAL
**BC:** .213
**SD:** .173

| Powder | Sugg Starting Grains | Velocity fps | Pressure C.U.P. | Max Load Grains | Velocity fps | Pressure C.U.P. |
|---|---|---|---|---|---|---|
| **Bullseye** | 2.8 | 638 | 10,000 | **4.0** | **858** | **16,000** |
| | | | | (+P)4.4 | 915 | 18,100 |
| PB | 3.0 | 584 | 8,700 | 4.2 | 825 | 16,200 |
| 231 | 3.5 | 680 | 11,100 | 4.7 | 885 | 16,800 |
| | | | | (+P)5.0 | 934 | 18,000 |
| AA#5 | 5.0 | 793 | 13,300 | 5.6 | 870 | 15,600 |
| Unique | 3.4 | 601 | 8,900 | 5.1 | 895 | 16,100 |
| | | | | (+P)5.4 | 954 | 18,000 |
| Universal | 4.3 | 758 | 12,600 | 4.8 | 869 | 15,600 |
| | | | | (+P)5.1 | 931 | 17,400 |
| SR-4756 | 4.2 | 630 | 9,500 | 5.5 | 898 | 16,700 |
| HS-6 | 4.4 | 564 | 8,000 | 6.7 | 894 | 16,600 |
| Blue Dot | 6.0 | 686 | 10,400 | 7.2 | 867 | 15,700 |

**#358665**
158 gr. (Linotype) 1.445" OAL
**BC:** .267
**SD:** .176

| Powder | Sugg Starting Grains | Velocity fps | Pressure C.U.P. | Max Load Grains | Velocity fps | Pressure C.U.P. |
|---|---|---|---|---|---|---|
| Bullseye | 3.0 | 786 | 14,900 | 3.4 | 855 | 16,600 |
| **231** | 3.6 | 769 | 13,100 | **4.0** | **837** | **15,900** |
| Unique | 4.0 | 791 | 13,100 | 4.5 | 871 | 16,000 |
| Universal | 4.2 | 760 | 12,500 | 4.7 | 867 | 15,800 |
| AA#5 | 4.9 | 781 | 13,100 | 5.5 | 857 | 15,700 |
| SR-4756 | 4.9 | 785 | 13,000 | 5.5 | 872 | 15,800 |
| Blue Dot | 5.9 | 765 | 12,200 | 6.6 | 855 | 15,700 |

**#358311**
160 gr. (Linotype) 1.550" OAL
**BC:** .228
**SD:** .178

| Powder | Sugg Starting Grains | Velocity fps | Pressure C.U.P. | Max Load Grains | Velocity fps | Pressure C.U.P. |
|---|---|---|---|---|---|---|
| **Bullseye** | **3.2** | **796** | **13,200** | 3.6 | 863 | 15,800 |
| | | | | (+P)4.1 | 936 | 18,300 |
| Titegroup | 3.2 | 775 | 11,100 | 3.6 | 877 | 16,200 |
| 231 | 3.5 | 675 | 9,600 | 4.9 | 906 | 16,800 |
| | | | | (+P)5.2 | 956 | 18,500 |
| Unique | 4.2 | 801 | 11,400 | 4.7 | 905 | 15,900 |
| | | | | (+P)5.3 | 982 | 18,500 |
| SR-4756 | 4.2 | 620 | 8,700 | 5.5 | 874 | 16,000 |
| AA#5 | 5.2 | 813 | 12,000 | 5.8 | 904 | 16,100 |
| HS-6 | 4.5 | 610 | 8,200 | 6.7 | 901 | 16,200 |
| Blue Dot | 6.3 | 809 | 13,200 | 7.0 | 883 | 15,800 |

**#358429**
170 gr. (Linotype) 1.537" OAL
**BC:** .286
**SD:** .189

| Powder | Sugg Starting Grains | Velocity fps | Pressure C.U.P. | Max Load Grains | Velocity fps | Pressure C.U.P. |
|---|---|---|---|---|---|---|
| Clays | 2.3 | 722 | 11,500 | 2.9 | 824 | 15,900 |
| Bullseye | 2.8 | 781 | 13,600 | 3.2 | 833 | 15,500 |
| **Titegroup** | 3.0 | 808 | 14,100 | **3.4** | **864** | **16,500** |
| 231 | 3.0 | 599 | 9,300 | 4.6 | 855 | 16,900 |
| Unique | 3.7 | 761 | 12,200 | 4.2 | 841 | 15,500 |
| SR-7625 | 3.4 | 621 | 9,700 | 4.6 | 821 | 16,300 |
| AA#5 | 4.3 | 755 | 11,500 | 5.1 | 894 | 16,100 |
| SR-4756 | 4.2 | 645 | 10,000 | 5.4 | 836 | 16,400 |
| HS-6 | 5.0 | 677 | 11,000 | 6.4 | 856 | 16,800 |
| Blue Dot | 6.0 | 780 | 12,700 | 6.7 | 851 | 15,000 |

**Note:** Loads shown in shaded panels are maximum.
Loads shown in bold designate potentially most accurate load.
(+P) Designates higher pressure loads. See Comments.

# 357 Magnum

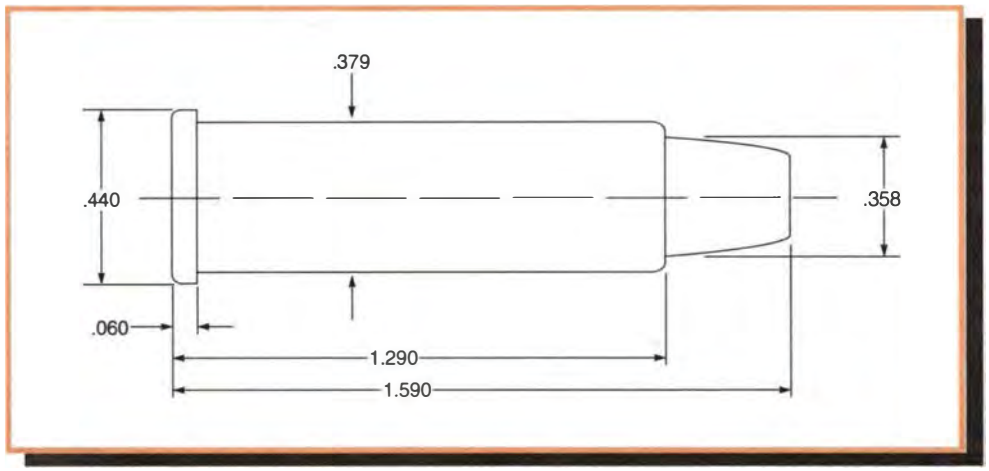


**Comments:**

Never use 357 Magnum Loads in 38 Special cases as very dangerous pressure will result.

Handguns can vary in groove diameter and it is wise to slug your barrel before sizing cast bullets.

In order to maintain a maximum overall cartridge length of 1.590", it is sometimes necessary to crimp cast bullets on the forward edge of the first driving band.

When using half jacketed bullets velocities must be kept above 750 fps. to prevent bullet jackets from becoming lodged in the barrel (the lead cores may exit the muzzle and strike the target). To crimp half jacket bullets, form the crimp at the junction of the jacket and exposed lead nose.

Bullet #358156 is extremely popular for heavy loads. Bullet #358429 closely duplicates the factory 158 grain semi-wadcutter. This is the Elmer Keith design bullet and makes an excellent choice for hunting.

For light loads Bullseye works best. Heavy loads work well with a wide range of powders but you might want to try 2400 for your first accuracy tests.

**Test Components:**

Cases . . . . . .Federal
Trim-to Length . . . . . .1.280"
Primers . . . . . .CCI 550
Primer Size . . . . . .Small Pistol, Magnum
Lyman Shell Holder . . . . . .No. 1
Jacketed Bullets Used . . . . .Speer JHP #4007, 110 gr.
Hornady JHP #35710, 125 gr.
Speer JHP #4203, 140 gr.
Speer JHP #4205, 146 gr.
Hornady JHP #35750, 158 gr.
Hornady JTC SIL #3577, 180 gr.

Cast Bullets Used . . . . . .(sized to .357" dia)
*gas check bullet #356242, 90 gr.
#356242, 120 gr.
#356402, 120 gr.
*#358093, 125 gr.
#358477, 150 gr.
*#358156, 155 gr.
#358311, 160 gr.
#358429, 170 gr.

**Test Specifications:**
**(Velocity & Pressure)**

Firearm Used . . . . . .Universal Receiver
Barrel Length . . . . . .4"
Twist . . . . . .1-18¾"
Groove Dia. . . . . .356"

**110 gr. Jacketed HP**
1.590" OAL
**BC:** .122
**SD:** .123

| Powder | Sugg Starting Grains | Velocity fps | Pressure C.U.P. | Max Load Grains | Velocity fps | Pressure C.U.P. |
|---|---|---|---|---|---|---|
| Bullseye | 7.0 | 1030 | 20,500 | 9.7 | 1471 | 40,300 |
| 231 | 8.9 | 1142 | 29,300 | 9.5 | 1328 | 37,500 |
| Unique | 7.4 | 1052 | 17,300 | 10.0 | 1392 | 36,400 |
| Blue Dot | 10.0 | 930 | 12,400 | 14.6 | 1545 | 39,400 |
| 2400 | 13.5 | 1045 | 17,400 | 20.3+ | 1561 | 39,100 |
| **N110** | **17.8** | **1568** | **33,900** | 19.8 | 1693 | 41,300 |
| IMR-4227 | 14.8 | 1100 | 20,700 | 19.5+ | 1383 | 30,100 |

**125 gr. Jacketed HP**
1.590" OAL
**BC:** .151
**SD:** .140

| Powder | Sugg Starting Grains | Velocity fps | Pressure C.U.P. | Max Load Grains | Velocity fps | Pressure C.U.P. |
|---|---|---|---|---|---|---|
| Bullseye | 6.5 | 864 | 21,000 | 8.6 | 1315 | 38,400 |
| Unique | 7.0 | 990 | 18,900 | 9.7 | 1359 | 41,600 |
| AA#5 | 10.6 | 1223 | 31,100 | 11.8 | 1471 | 39,300 |
| Power Pistol | 9.0 | 1238 | 32,100 | 10.0 | 1479 | 38,600 |
| N340 | 8.1 | 1147 | 31,800 | 9.0 | 1366 | 40,800 |
| HS-7 | 10.9 | 1098 | 21,400 | 14.4 | 1403 | 39,200 |
| Blue Dot | 10.4 | 1113 | 20,000 | 13.3 | 1402 | 36,700 |
| **2400** | 13.0 | 1159 | 24,900 | **17.7** | **1478** | **40,600** |
| N110 | 14.5 | 1157 | 26,000 | 17.5+ | 1371 | 38,500 |
| H110 | 21.0 | 1357 | 33,500 | 22.0+ | 1506 | 42,600 |
| IMR-4227 | 15.6 | 1232 | 31,200 | 19.5+ | 1427 | 37,400 |

**Note:** Loads shown in shaded panels are maximum.
Loads shown in bold designate potentially most accurate load.
\+ Designates a compressed powder charge.

# 357 Magnum

**140 gr. Jacketed HP**
1.590" OAL
**BC:** .152
**SD:** .157

| Powder | Sugg Starting Grains | Velocity fps | Pressure C.U.P. | Max Load Grains | Velocity fps | Pressure C.U.P. |
|---|---|---|---|---|---|---|
| Bullseye | 5.7 | 705 | 20,300 | 8.0 | 1116 | 39,200 |
| Unique | 7.0 | 949 | 20,800 | 8.9 | 1233 | 40,000 |
| AA#5 | 9.4 | 1035 | 30,600 | 10.5 | 1218 | 36,000 |
| HS-6 | 8.4 | 1076 | 30,200 | 9.5 | 1257 | 37,500 |
| Blue Dot | 9.2 | 917 | 17,900 | 11.9 | 1272 | 35,200 |
| **2400** | 12.5 | 1047 | 26,500 | **16.5** | **1343** | **40,300** |
| N110 | 15.3 | 1258 | 32,200 | 17.1 | 1505 | 39,900 |
| H110 | 17.3 | 1287 | 31,600 | 18.0 | 1324 | 35,700 |
| IMR-4227 | 15.0 | 1106 | 28,800 | 17.8 | 1372 | 41,400 |

**146 gr. Jacketed HP**
1.590" OAL
**BC:** .159
**SD:** .163

| Powder | Sugg Starting Grains | Velocity fps | Pressure C.U.P. | Max Load Grains | Velocity fps | Pressure C.U.P. |
|---|---|---|---|---|---|---|
| Bullseye | 5.7 | 759 | 23,300 | 7.5 | 1077 | 39,900 |
| Unique | 6.3 | 928 | 25,900 | 8.1 | 1200 | 41,100 |
| N340 | 7.6 | 1066 | 34,600 | 8.5 | 1212 | 45,000 |
| AA#5 | 9.5 | 1034 | 32,100 | 10.6 | 1208 | 38,500 |
| Blue Dot | 9.0 | 943 | 21,300 | 11.5 | 1273 | 39,700 |
| AA#7 | 10.8 | 1027 | 26,400 | 12.0 | 1337 | 41,700 |
| **2400** | 11.0 | 895 | 20,800 | **15.1** | **1242** | **39,100** |
| N110 | 14.5 | 1075 | 27,700 | 16.2 | 1358 | 37,200 |
| H110 | 16.3 | 1336 | 36,000 | 17.0 | 1380 | 41,900 |
| IMR-4227 | 14.5 | 1045 | 29,500 | 16.0 | 1196 | 36,000 |

**158 gr. Jacketed HP**
1.590" OAL
**BC:** .206
**SD:** .177

| Powder | Sugg Starting Grains | Velocity fps | Pressure C.U.P. | Max Load Grains | Velocity fps | Pressure C.U.P. |
|---|---|---|---|---|---|---|
| Unique | 6.4 | 887 | 18,900 | 8.3 | 1185 | 38,300 |
| Blue Dot | 9.6 | 929 | 27,600 | 10.7 | 1158 | 39,800 |
| AA#7 | 10.2 | 1005 | 31,200 | 11.5 | 1220 | 38,700 |
| N110 | 11.5 | 851 | 21,800 | 14.0 | 1139 | 38,200 |
| **2400** | 11.3 | 938 | 20,700 | **14.9** | **1279** | **41,800** |
| AA#9 | 13.4 | 1158 | 32,900 | 14.9 | 1357 | 42,900 |
| H-110 | 16.3 | 1178 | 31,700 | 17.0 | 1309 | 38,400 |
| IMR-4227 | 12.2 | 944 | 21,500 | 16.1 | 1249 | 41,400 |

**180 gr. JTC SIL**
1.585" OAL
**BC:** .232
**SD:** .202

| Powder | Sugg Starting Grains | Velocity fps | Pressure C.U.P. | Max Load Grains | Velocity fps | Pressure C.U.P. |
|---|---|---|---|---|---|---|
| Blue Dot | 8.4 | 782 | 27,300 | 9.4 | 970 | 39,100 |
| N110 | 10.8 | 814 | 26,400 | 13.5+ | 999 | 40,800 |
| 2400 | 10.0 | 597 | 23,100 | 12.6 | 949 | 40,500 |
| AA#9 | 11.2 | 857 | 29,200 | 12.5 | 1069 | 39,000 |
| **H-110** | 13.9 | 947 | 30,300 | **14.5** | **1101** | **38,100** |
| 296 | — | — | — | 14.9 | 1096 | 42,000 |
| IMR-4227 | 11.7 | 602 | 22,900 | 14.6 | 933 | 40,000 |

**#356242**
90 gr. (Linotype) 1.585" OAL
**BC:** .105
**SD:** .101

| Powder | Sugg Starting Grains | Velocity fps | Pressure C.U.P. | Max Load Grains | Velocity fps | Pressure C.U.P. |
|---|---|---|---|---|---|---|
| **700X** | 6.0 | 1206 | 19,700 | **8.3** | **1581** | **41,500** |
| Bullseye | 7.5 | 1365 | 25,900 | 9.5 | 1630 | 39,900 |
| SR-7625 | 7.5 | 1262 | 20,700 | 9.8 | 1613 | 40,900 |
| 231 | 8.1 | 1329 | 25,600 | 10.1 | 1629 | 41,200 |
| AA#5 | 10.0 | 1106 | 14,800 | 12.5 | 1642 | 30,900 |
| Power Pistol | 10.5 | 1301 | 25,300 | 11.7 | 1495 | 41,100 |

**#356242**
120 gr. (Linotype) 1.585" OAL
**BC:** .154
**SD:** .135

| Powder | Sugg Starting Grains | Velocity fps | Pressure C.U.P. | Max Load Grains | Velocity fps | Pressure C.U.P. |
|---|---|---|---|---|---|---|
| Bullseye | 5.7 | 1045 | 16,500 | 8.0 | 1320 | 35,800 |
| **Unique** | 6.9 | 1088 | 21,100 | **9.1** | **1409** | **42,000** |
| SR-7625 | 5.5 | 974 | 17,500 | 8.0 | 1335 | 41,100 |
| AA#5 | 8.6 | 989 | 19,600 | 10.8 | 1450 | 37,300 |
| Power Pistol | 9.9 | 1308 | 33,100 | 11.0 | 1425 | 41,200 |
| HS-6 | 11.2 | 1108 | 25,600 | 12.5 | 1376 | 40,100 |
| HS-7 | 10.0 | 1053 | 18,400 | 13.2 | 1436 | 40,300 |
| 2400 | 13.0 | 1178 | 25,700 | 16.4 | 1494 | 41,700 |

**Note:** Loads shown in shaded panels are maximum.
Loads shown in bold designate potentially most accurate load.
+ Designates a compressed powder charge.

# 357 Magnum

**#356402**
120 gr. (Linotype) 1.590" OAL
**BC:** .146
**SD:** .135

| Powder | Sugg Starting Grains | Velocity fps | Pressure C.U.P. | Max Load Grains | Velocity fps | Pressure C.U.P. |
|---|---|---|---|---|---|---|
| **Bullseye** | **6.5** | **994** | **18,800** | 8.3 | 1390 | 37,600 |
| Unique | 7.2 | 1134 | 15,800 | 9.4 | 1482 | 41,300 |
| SR-7625 | 7.0 | 1205 | 23,000 | 8.8 | 1429 | 41,600 |
| Power Pistol | 9.9 | 1326 | 33,200 | 11.0 | 1449 | 41,000 |
| HS-6 | 10.8 | 1325 | 30,400 | 12.0 | 1532 | 38,400 |
| Blue Dot | 10.8 | 1156 | 17,000 | 13.0 | 1564 | 41,400 |
| 2400 | 13.5 | 1140 | 17,300 | 19.5+ | 1565 | 37,200 |

**#358093**
125 gr. (Linotype) 1.585" OAL
**BC:** .079
**SD:** .140

| Powder | Sugg Starting Grains | Velocity fps | Pressure C.U.P. | Max Load Grains | Velocity fps | Pressure C.U.P. |
|---|---|---|---|---|---|---|
| **Bullseye** | **5.5** | **890** | **26,800** | 6.8 | 1158 | 38,200 |
| Unique | 6.0 | 769 | 16,600 | 7.8 | 1290 | 38,900 |
| Herco | 6.5 | 903 | 23,000 | 8.0 | 1275 | 41,000 |
| Power Pistol | 7.8 | 1065 | 32,100 | 8.7 | 1360 | 40,000 |
| AA#5 | 7.5 | 932 | 22,300 | 9.4 | 1359 | 40,000 |
| HS-6 | 9.4 | 987 | 30,500 | 10.5 | 1230 | 38,600 |
| Blue Dot | 9.0 | 854 | 19,800 | 10.5 | 1339 | 39,600 |
| 2400 | 11.5 | 1026 | 26,400 | 14.0 | 1429 | 38,900 |

**#358477**
150 gr. (Linotype) 1.510" OAL
**BC:** .286
**SD:** .168

| Powder | Sugg Starting Grains | Velocity fps | Pressure C.U.P. | Max Load Grains | Velocity fps | Pressure C.U.P. |
|---|---|---|---|---|---|---|
| Bullseye | 4.6 | 772 | 17,300 | 7.0 | 1114 | 36,900 |
| Herco | 6.2 | 972 | 17,700 | 7.8 | 1225 | 41,900 |
| Blue Dot | 8.2 | 950 | 13,000 | 10.8 | 1356 | 41,200 |
| HS-6 | 9.0 | 1103 | 32,600 | 10.0 | 1301 | 40,100 |
| AA#7 | 10.8 | 1068 | 25,300 | 12.0 | 1390 | 40,700 |
| AA#9 | 12.1 | 1096 | 31,100 | 13.5 | 1331 | 40,600 |
| 2400 | 11.0 | 998 | 17,900 | 15.0 | 1362 | 41,400 |
| N110 | 13.2 | 1152 | 32,400 | 14.7 | 1374 | 39,900 |
| H110 | 16.3 | 1245 | 31,300 | 17.0 | 1351 | 39,900 |
| **IMR-4227** | 11.8 | 1044 | 21,700 | **16.0+** | **1333** | **40,200** |

**#358156**
155 gr. (Linotype) 1.590" OAL
**BC:** .213
**SD:** .174

| Powder | Sugg Starting Grains | Velocity fps | Pressure C.U.P. | Max Load Grains | Velocity fps | Pressure C.U.P. |
|---|---|---|---|---|---|---|
| Bullseye | 4.8 | 828 | 18,000 | 7.0 | 1122 | 39,400 |
| Herco | 5.0 | 785 | 16,300 | 7.5 | 1151 | 41,000 |
| HS-6 | 8.8 | 1069 | 29,100 | 9.7 | 1271 | 40,200 |
| Blue Dot | 8.5 | 975 | 21,500 | 10.5 | 1277 | 0,800 |
| AA#7 | 10.8 | 893 | 28,300 | 12.0 | 1146 | 41,300 |
| AA#9 | 13.0 | 998 | 29,500 | 14.5 | 1221 | 39,600 |
| **2400** | 10.6 | 999 | 24,900 | **14.0** | **1299** | **41,900** |
| N110 | 12.0 | 1074 | 27,400 | 15.0+ | 1299 | 41,800 |
| H110 | 15.0 | 1310 | 35,800 | 15.7 | 1363 | 40,300 |
| IMR-4227 | 11.4 | 973 | 24,100 | 15.2 | 1254 | 41,300 |

**#358311**
160 gr. (Linotype) 1.590" OAL
**BC:** .228
**SD:** .179

| Powder | Sugg Starting Grains | Velocity fps | Pressure C.U.P. | Max Load Grains | Velocity fps | Pressure C.U.P. |
|---|---|---|---|---|---|---|
| Bullseye | 4.9 | 821 | 17,500 | 6.9 | 1119 | 41,100 |
| Herco | 6.3 | 963 | 18,700 | 7.9 | 1203 | 41,000 |
| HS-6 | 8.5 | 1046 | 32,600 | 9.7 | 1225 | 41,000 |
| Blue Dot | 8.2 | 888 | 11,600 | 10.9 | 1316 | 39,200 |
| AA#7 | 10.2 | 1004 | 27,400 | 11.5 | 1213 | 41,000 |
| AA#9 | 12.3 | 1123 | 28,700 | 13.7 | 1350 | 41,800 |
| 2400 | 11.4 | 1024 | 20,200 | 15.5 | 1344 | 39,700 |
| N110 | 12.6 | 1054 | 26,400 | 14.0 | 1293 | 39,000 |
| H110 | 15.8 | 1343 | 34,500 | 16.5 | 1463 | 40,300 |
| **IMR-4227** | 11.8 | 977 | 19,600 | **17.0+** | **1345** | **40,600** |

**#358429**
170 gr. (Linotype) 1.553" OAL
**BC:** .286
**SD:** .190

| Powder | Sugg Starting Grains | Velocity fps | Pressure C.U.P. | Max Load Grains | Velocity fps | Pressure C.U.P. |
|---|---|---|---|---|---|---|
| Bullseye | 4.1 | 813 | 16,500 | 6.1 | 976 | 39,300 |
| Herco | 5.6 | 885 | 17,900 | 7.1 | 1105 | 39,000 |
| Blue Dot | 8.3 | 970 | 18,400 | 10.0 | 1233 | 39,200 |
| AA#9 | 11.7 | 1028 | 33,800 | 13.0 | 1231 | 0,500 |
| 2400 | 9.7 | 879 | 15,900 | 13.5 | 1242 | 41,100 |
| N110 | 12.3 | 1053 | 33,700 | 13.7 | 1212 | 40,000 |
| **H110** | 14.4 | 1172 | 33,500 | **15.0** | **1285** | **40,900** |
| IMR-4227 | 9.8 | 835 | 14,100 | 14.5+ | 1233 | 40,800 |

**Note:** Loads shown in shaded panels are maximum.
Loads shown in bold designate potentially most accurate load.
\+ Designates a compressed powder charge.

# 9mm Makarov

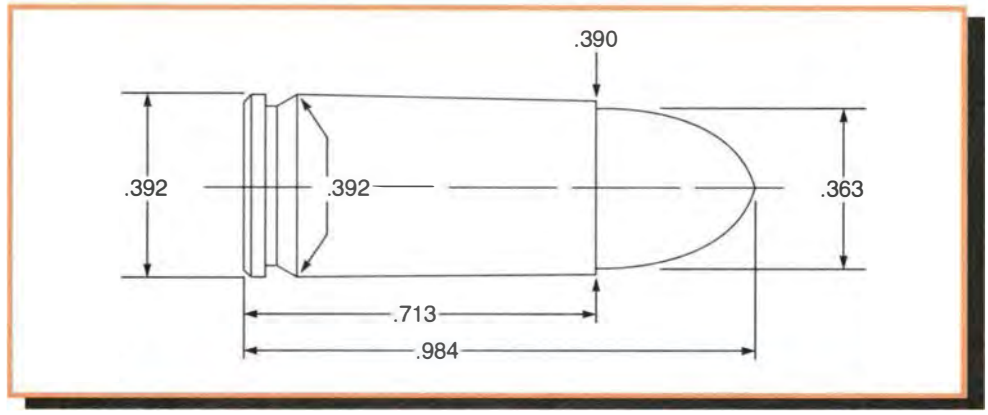


**Comments:**

The 9mm Makarov is the current standard caliber for Russian military handguns. Other former Soviet Bloc countries also use this cartridge. We have added this cartridge due to the demand for data to satisfy the recent influx of surplus arms.

While called a 9mm this cartridge actually uses a .363 inch (9.2mm) diameter bullet. As such, finding suitable bullets used to take some looking. Recently, however a number of suitable bullets have come onto the market. The jacketed bullets used were obtained from Schroeder Bullets, 1421 Thermal Ave., San Diego, CA., 92154. Other bullet makers, such as Sierra and Hornady, have introduced bullets as more handguns have become available

Cases were obtained from Starline, 1300 W. Henry St., Sedalia, MO., 65301, for our test work. Cases can also be formed from 9mm Luger brass trimmed to the proper length and fireformed. The volume of these cases is often less, however so approach maximum loads with caution.

231 and 700x gave us our most uniform results throughout our testing.

**Test Components:**

Cases . . . . . .Starline
Trim-to Length . . . . . .710"
Primers . . . . . .Remington 1½
Primer Size . . . . . .Small Pistol
Lyman Shell Holder . . . . . .No. 12
Jacketed Bullets Used . . . . . .Schroeder JHP, 90 gr.
Schroeder FMJ, 95 gr.
Schroeder JHC, 100 gr.

**Test Specifications: (Velocity Only)**

Firearm Used . . . . . .East German PM
Barrel Length . . . . . .3.6"
Twist . . . . . .1-19"
Groove Dia. . . . . .366"

**90 gr. Jacketed HP** — .970" OAL — **BC:** .105 **SD:** .097

| Powder | Sugg Starting Grains | Velocity fps | Pressure C.U.P. | Max Load Grains | Velocity fps | Pressure C.U.P. |
|---|---|---|---|---|---|---|
| Bullseye | 2.3 | 567 | — | 3.5 | 948 | — |
| AA#2 | 2.5 | 581 | — | 3.8 | 955 | — |
| **231** | 2.6 | 621 | — | **3.8** | **962** | — |
| 700X | 2.3 | 644 | — | 3.4 | 882 | — |
| AA#5 | 4.0 | 667 | — | 5.0 | 955 | — |
| Unique | 3.3 | 651 | — | 4.3 | 966 | — |

**100 gr. Jacketed HP** — .970" OAL — **BC:** .130 **SD:** .108

| Powder | Sugg Starting Grains | Velocity fps | Pressure C.U.P. | Max Load Grains | Velocity fps | Pressure C.U.P. |
|---|---|---|---|---|---|---|
| **Bullseye** | 2.0 | 573 | — | **3.2** | **864** | — |
| AA#2 | 2.2 | 540 | — | 3.4 | 801 | — |
| 231 | 2.3 | 542 | — | 3.5 | 820 | — |
| 700X | 2.1 | 501 | — | 3.3 | 868 | — |
| AA#5 | 3.6 | 616 | — | 4.8 | 825 | — |
| Unique | 3.0 | 639 | — | 4.1 | 887 | — |

**95 gr. FMJ** — .970" OAL — **BC:** .184 **SD:** .103

| Powder | Sugg Starting Grains | Velocity fps | Pressure C.U.P. | Max Load Grains | Velocity fps | Pressure C.U.P. |
|---|---|---|---|---|---|---|
| Bullseye | 2.2 | 587 | — | 3.4 | 872 | — |
| AA#2 | 2.4 | 670 | — | 3.7 | 945 | — |
| 231 | 2.5 | 613 | — | 3.7 | 900 | — |
| **700X** | 2.3 | 616 | — | **3.4** | **900** | — |
| AA#5 | 3.8 | 574 | — | 5.0 | 909 | — |
| Unique | 3.2 | 672 | — | 4.2 | 901 | — |

**Note:** Loads shown in shaded panels are maximum.
Loads shown in bold designate potentially most accurate load.

# 38-40 Winchester

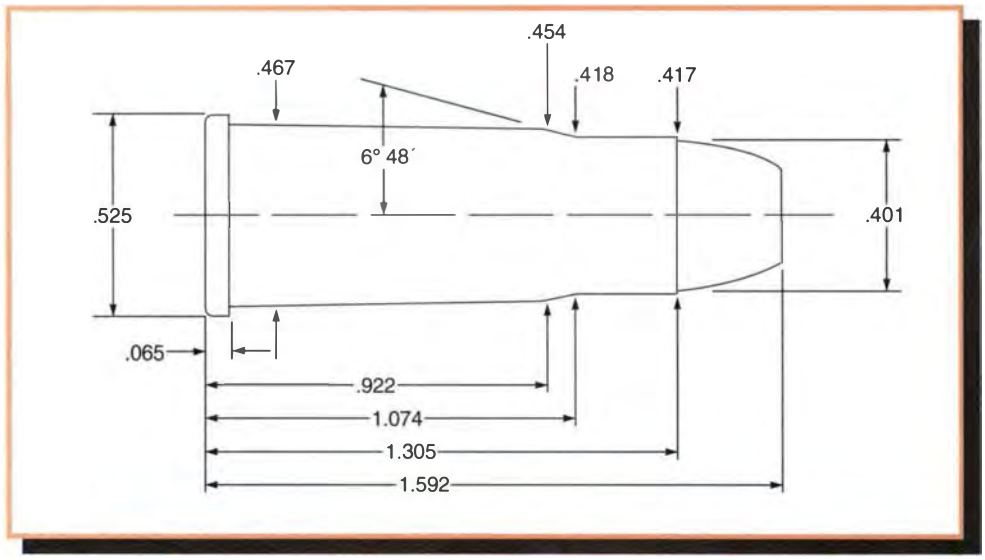


**Comments:**

This is a very old cartridge and care should be taken not to use the data listed in any handgun which has deteriorated. Additionally this data should not be used in conjunction with any firearm designed for black powder cartridges.

Individual tolerances vary greatly in firearms chambered for this cartridge even among the same make and model. Therefore exercise extreme caution when developing loads as you work up from the suggested starting grains listing.

Never load old brass as it may be of the weaker balloon head types or have been fired at one time with corrosive primers.

**Test Components:**

Cases . . . . . .Winchester
Trim-to Length . . . . . .1.300"
Primers . . . . . .Winchester WLP
Primer Size . . . . . .Large Pistol
Lyman Shell Holder . . . . . .No. 14B
Cast Bullets Used . . . . . .(sized to .401" dia) #401043, 175 gr.

**Test Specifications: (Velocity & Pressure)**

Firearm Used . . . . . .Universal Receiver
Barrel Length . . . . . .6½"
Twist . . . . . .1-36"
Groove Dia. . . . . .401"

**#401043**
175 gr. (#2 Alloy) 1.575" OAL
**BC:** .098
**SD:** .155

| Powder | Sugg Starting Grains | Velocity fps | Pressure C.U.P. | Max Load Grains | Velocity fps | Pressure C.U.P. |
|---|---|---|---|---|---|---|
| Bullseye | 4.0 | 740 | 7,100 | 5.9 | 965 | 13,200 |
| **Unique** | **8.0** | **931** | **8,600** | 10.0 | 1115 | 13,500 |
| 2400 | 11.0 | 740 | 6,600 | 14.0 | 1111 | 13,900 |

**Note:** Loads shown in shaded panels are maximum.
Loads shown in bold designate potentially most accurate load.

# 40 Smith & Wesson

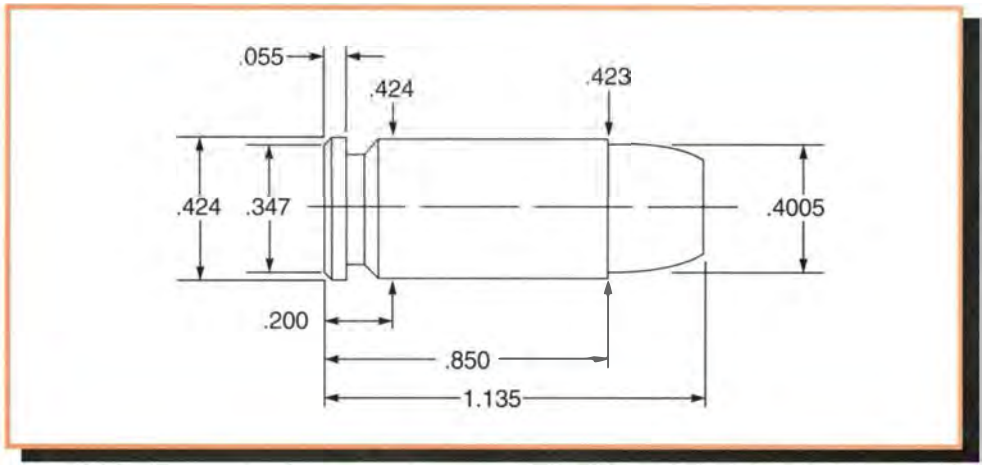


**Comments:**

The 40 S&W has quickly become a very popular cartridge as it is a good choice between the 9mm and 45 ACP. It has lighter recoil and greater magazine capacity than the 45 ACP and is more powerful than the 9mm. Accuracy in most handguns is superb, especially with Bullseye, Winchester 231 and Accurate Arms No. 5.

This cartridge headspaces from the mouth and therefore case trimming must be uniform and accurate. Do not reduce cases below the trim-to length. Additionally do not roll crimp bullets as this will prevent the case from properly headspacing on its mouth. A modest taper crimp may be employed if found necessary.

It is important not to seat bullets to a shorter length than listed in any handgun cartridge; but especially so in this one. Pressures can be raised dramatically with deep seating.

**Test Components:**

Cases . . . . . .Winchester
Trim-to Length . . . . . .845"
Primers . . . . . .Winchester WSP
Primer Size . . . . . .Small Pistol
Lyman Shell Holder . . . . . .No. 15
Jacketed Bullets Used . . . .Nosler JHP #44838, 135 gr.
Sierra JHP #8430, 150 gr.
Winchester Silvertip #SHP40, 155 gr.
Speer TMJ #4410, 165 gr.
Winchester Silvertip #SHP10, 175 gr.
Sierra JHP #8460, 180 gr.
Sierra FPJ #8480, 190 gr.
Cast Bullets Used . . . . . .(sized to .401" dia)
#401654, 150 gr.
#401043, 175 gr.
#401638, 175 gr.

**Test Specifications: (Velocity & Pressure)**

Firearm Used . . . . . .Universal Receiver
Barrel Length . . . . . .4"
Twist . . . . . .1-16"
Groove Dia. . . . . .401"

**135 gr. Jacketed HP**
1.085" OAL
**BC:** .093
**SD:** .121

| Powder | Sugg Starting Grains | Velocity fps | Pressure C.U.P. | Max Load Grains | Velocity fps | Pressure C.U.P. |
|---|---|---|---|---|---|---|
| **Bullseye** | **5.5** | **1070** | **19,600** | 6.3 | 1203 | 23,200 |
| AA#2 | 5.0 | 1014 | 19,300 | 6.0 | 1168 | 23,500 |
| 231 | 5.5 | 1005 | 17,800 | 6.7 | 1185 | 23,300 |
| Unique | 5.8 | 1025 | 18,500 | 6.8 | 1198 | 23,000 |
| AA#5 | 7.2 | 1026 | 17,500 | 8.3 | 1221 | 23,500 |
| Power Pistol | 7.3 | 1027 | 19,200 | 8.2 | 1225 | 23,200 |
| N340 | 6.3 | 1020 | 19,300 | 7.0 | 1193 | 23,000 |
| HS-6 | 8.0 | 1022 | 17,600 | 9.0 | 1171 | 22,000 |
| Blue Dot | 9.0 | 1058 | 19,500 | 10.3 | 1162 | 23,100 |

**150 gr. Jacketed HP**
1.100" OAL
**BC:** .130
**SD:** .134

| Powder | Sugg Starting Grains | Velocity fps | Pressure C.U.P. | Max Load Grains | Velocity fps | Pressure C.U.P. |
|---|---|---|---|---|---|---|
| Clays | 3.5 | 858 | 17,100 | 4.4 | 1025 | 21,600 |
| Bullseye | 4.9 | 740 | 18,200 | 5.7 | 890 | 22,500 |
| **231** | **5.0** | **799** | **17,900** | 6.2 | 1054 | 22,800 |
| Unique | 5.5 | 982 | 17,800 | 6.6 | 1132 | 23,300 |
| AA#5 | 6.9 | 998 | 18,400 | 7.7 | 1101 | 23,300 |
| WST | 5.5 | 968 | 19,100 | 6.4 | 1096 | 23,400 |
| Power Pistol | 6.7 | 954 | 19,000 | 7.5 | 1105 | 22,300 |
| N340 | 5.7 | 922 | 18,800 | 6.3 | 1091 | 23,100 |
| HS-6 | 7.6 | 990 | 17,100 | 8.6 | 1093 | 22,300 |
| 800X | 6.9 | 999 | 18,500 | 8.4 | 1109 | 23,200 |
| Blue Dot | 8.6 | 999 | 18,800 | 10.0 | 1140 | 23,100 |

**Note:** Loads shown in shaded panels are maximum.
Loads shown in bold designate potentially most accurate load.

# 40 Smith & Wesson

**155 gr. Jacketed Silvertip**
1.125" OAL
**BC:** .166
**SD:** .138

| Powder | Sugg Starting Grains | Velocity fps | Pressure C.U.P. | Max Load Grains | Velocity fps | Pressure C.U.P. |
|---|---|---|---|---|---|---|
| Bullseye | 5.1 | 771 | 19,500 | 5.7 | 885 | 22,500 |
| 231 | 5.3 | 877 | 18,000 | 5.9 | 1053 | 22,300 |
| Unique | 5.8 | 847 | 18,300 | 6.5 | 1011 | 22,800 |
| AA#5 | 7.1 | 916 | 18,400 | 8.0 | 1054 | 22,500 |
| **Power Pistol** | 7.0 | 942 | 20,400 | **7.8** | **1082** | **23,300** |
| N340 | 5.5 | 893 | 19,800 | 6.2 | 993 | 22,600 |
| HS-6 | 7.6 | 924 | 18,900 | 8.5 | 1089 | 22,800 |
| 800X | 7.2 | 988 | 19,800 | 8.0 | 1056 | 22,400 |
| Blue Dot | 8.2 | 881 | 18,800 | 9.2 | 1010 | 22,100 |

**165 gr. TMJ**
1.120" OAL
**BC:** .135
**SD:** .147

| Powder | Sugg Starting Grains | Velocity fps | Pressure C.U.P. | Max Load Grains | Velocity fps | Pressure C.U.P. |
|---|---|---|---|---|---|---|
| Bullseye | 4.8 | 733 | 19,200 | 5.4 | 825 | 22,600 |
| 231 | 5.2 | 937 | 19,300 | 5.8 | 1050 | 22,100 |
| Unique | 5.4 | 952 | 19,300 | 6.0 | 1034 | 21,700 |
| AA#5 | 6.9 | 934 | 18,400 | 7.6 | 1025 | 21,400 |
| **Power Pistol** | 6.3 | 855 | 17,900 | **7.0** | **953** | **22,000** |
| N340 | 5.5 | 873 | 18,700 | 6.1 | 997 | 23,000 |
| HS-6 | 7.6 | 833 | 17,400 | 8.5 | 979 | 22,600 |
| 800X | 7.2 | 891 | 19,700 | 8.0+ | 1004 | 22,600 |
| Blue Dot | 8.3 | 922 | 19,900 | 9.2 | 1018 | 22,400 |

**175 gr. Jacketed Silvertip**
1.125" OAL
**BC:** .142
**SD:** .156

| Powder | Sugg Starting Grains | Velocity fps | Pressure C.U.P. | Max Load Grains | Velocity fps | Pressure C.U.P. |
|---|---|---|---|---|---|---|
| Bullseye | 4.7 | 735 | 20,000 | 5.3 | 843 | 23,400 |
| **WST** | 5.1 | 880 | 19,800 | **5.7** | **991** | **22,800** |
| 231 | 5.1 | 864 | 19,900 | 5.7 | 983 | 22,500 |
| Universal | 4.9 | 889 | 19,400 | 5.5 | 973 | 21,800 |
| Unique | 5.3 | 932 | 19,500 | 5.9 | 1044 | 23,000 |
| Power Pistol | 6.0 | 844 | 18,900 | 6.7 | 981 | 22,200 |
| N340 | 5.4 | 891 | 20,600 | 6.0 | 1004 | 23,000 |
| WSF | 5.8 | 930 | 20,700 | 6.5 | 1001 | 22,500 |
| HS-6 | 6.9 | 843 | 18,000 | 7.7 | 970 | 22,500 |
| 800X | 6.8 | 887 | 20,200 | 7.6 | 975 | 22,900 |
| Blue Dot | 7.9 | 952 | 19,500 | 8.8 | 1057 | 22,400 |

**180 gr. Jacketed HP**
1.115" OAL
**BC:** .170
**SD:** .161

| Powder | Sugg Starting Grains | Velocity fps | Pressure C.U.P. | Max Load Grains | Velocity fps | Pressure C.U.P. |
|---|---|---|---|---|---|---|
| Clays | 3.4 | 551 | 17,900 | 4.0 | 912 | 21,900 |
| Bullseye | 4.9 | 628 | 18,200 | 5.6 | 844 | 23,500 |
| 231 | 5.0 | 927 | 20,400 | 5.6 | 1015 | 22,800 |
| Universal | 4.8 | 815 | 18,500 | 5.5 | 941 | 22,800 |
| Unique | 4.9 | 839 | 18,800 | 5.6 | 916 | 23,100 |
| Power Pistol | 6.0 | 876 | 19,300 | 6.7 | 974 | 22,900 |
| N340 | 5.4 | 904 | 20,800 | 6.0 | 1014 | 23,100 |
| WSF | 5.0 | 853 | 17,700 | 6.2 | 993 | 23,400 |
| HS-6 | 6.9 | 860 | 19,600 | 8.0 | 1048 | 23,500 |
| **800X** | 5.9 | 906 | 18,700 | **7.4** | **1013** | **23,400** |
| Blue Dot | 7.3 | 754 | 18,000 | 8.8 | 990 | 23,300 |

**190 gr. Jacketed FP**
1.135" OAL
**BC:** .190
**SD:** .170

| Powder | Sugg Starting Grains | Velocity fps | Pressure C.U.P. | Max Load Grains | Velocity fps | Pressure C.U.P. |
|---|---|---|---|---|---|---|
| Bullseye | 3.9 | 520 | 16,200 | 5.0 | 722 | 23,100 |
| 231 | 4.2 | 540 | 16,800 | 5.3 | 723 | 23,200 |
| Universal | 4.7 | 730 | 14,600 | 5.3 | 846 | 23,000 |
| Unique | 4.5 | 535 | 15,900 | 5.3 | 720 | 23,100 |
| Power Pistol | 5.9 | 720 | 19,900 | 6.5 | 816 | 23,000 |
| AA#5 | 5.5 | 545 | 16,000 | 6.5 | 745 | 23,200 |
| **N340** | 5.0 | 773 | 18,900 | **5.6** | **870** | **23,200** |
| WSF | 4.9 | 530 | 16,100 | 5.8 | 702 | 22,700 |
| HS-6 | 6.4 | 594 | 16,200 | 7.2 | 734 | 22,300 |
| 800X | 5.2 | 573 | 17,200 | 6.3 | 737 | 22,200 |
| Blue Dot | 6.7 | 567 | 16,800 | 8.1 | 724 | 22,600 |

**#401654**
150 gr. (#2 Alloy) 1.090" OAL
**BC:** .074
**SD:** .133

| Powder | Sugg Starting Grains | Velocity fps | Pressure C.U.P. | Max Load Grains | Velocity fps | Pressure C.U.P. |
|---|---|---|---|---|---|---|
| Bullseye | 5.0 | 1056 | 18,600 | 6.0 | 1202 | 23,100 |
| 231 | 5.5 | 1079 | 19,000 | 6.5 | 1195 | 22,500 |
| **AA#2** | **5.0** | **1041** | **18,600** | 6.4 | 1192 | 22,900 |
| Unique | 5.0 | 980 | 16,200 | 6.3 | 1196 | 23,000 |
| Power Pistol | 6.3 | 971 | 18,700 | 7.0 | 1112 | 23,300 |
| AA#5 | 6.3 | 969 | 16,200 | 7.5 | 1195 | 23,500 |
| N340 | 5.3 | 911 | 17,800 | 5.9 | 1057 | 22,500 |
| HS-6 | 7.5 | 1038 | 18,000 | 8.8 | 1224 | 23,500 |
| 800X | 6.8 | 1085 | 19,800 | 8.0 | 1180 | 23,300 |
| Blue Dot | 8.3 | 1033 | 18,400 | 9.6 | 1171 | 22,800 |

**Note:** Loads shown in shaded panels are maximum.
Loads shown in bold designate potentially most accurate load.
\+ Designates a compressed powder charge.

# 40 Smith & Wesson

**#401043**
175 gr. (#2 Alloy) 1.125" OAL
**BC:** .098
**SD:** .155

| Powder | Sugg Starting Grains | Velocity fps | Pressure C.U.P. | Max Load Grains | Velocity fps | Pressure C.U.P. |
|---|---|---|---|---|---|---|
| Bullseye | 4.2 | 665 | 17,100 | 5.1 | 812 | 22,000 |
| 231 | 4.3 | 863 | 15,400 | 5.8 | 977 | 22,500 |
| Universal | 4.8 | 832 | 15,300 | 5.5 | 1006 | 21,900 |
| Unique | 4.8 | 911 | 15,900 | 5.8 | 1023 | 23,300 |
| Power Pistol | 5.9 | 908 | 18,900 | 6.6 | 998 | 21,600 |
| AA#5 | 6.1 | 903 | 19,300 | 6.9 | 1066 | 23,000 |
| **N340** | 5.2 | 918 | 18,700 | **5.8** | **1038** | **23,000** |
| HS-6 | 7.0 | 940 | 17,000 | 8.2 | 1047 | 23,300 |
| 800X | 5.6 | 853 | 16,500 | 7.4 | 974 | 22,400 |
| Blue Dot | 7.3 | 897 | 17,900 | 9.0 | 1123 | 23,500 |

**#401638**
175 gr. (#2 Alloy) 1.100" OAL
**BC:** .088
**SD:** .155

| Powder | Sugg Starting Grains | Velocity fps | Pressure C.U.P. | Max Load Grains | Velocity fps | Pressure C.U.P. |
|---|---|---|---|---|---|---|
| Clays | 3.3 | 641 | 17,800 | 4.0 | 992 | 20,900 |
| Bullseye | 4.0 | 654 | 16,900 | 5.0 | 842 | 23,100 |
| 231 | 4.3 | 796 | 16,000 | 5.8 | 970 | 22,700 |
| Universal | 4.7 | 871 | 17,400 | 5.4 | 1009 | 22,900 |
| Unique | 4.7 | 898 | 18,600 | 5.8 | 971 | 23,200 |
| Power Pistol | 5.8 | 873 | 18,900 | 6.5 | 996 | 22,900 |
| AA#5 | 6.0 | 844 | 18,600 | 6.9 | 1047 | 22,600 |
| **N340** | 4.8 | 873 | 18,800 | **5.4** | **1008** | **22,400** |
| HS-6 | 7.0 | 976 | 18,600 | 8.4 | 1129 | 22,800 |
| 800X | 5.8 | 878 | 17,000 | 7.6 | 996 | 22,900 |
| Blue Dot | 6.9 | 979 | 18,100 | 8.6 | 1059 | 23,200 |

**Note:** Loads shown in shaded panels are maximum.
Loads shown in bold designate potentially most accurate load.

# 10mm Automatic

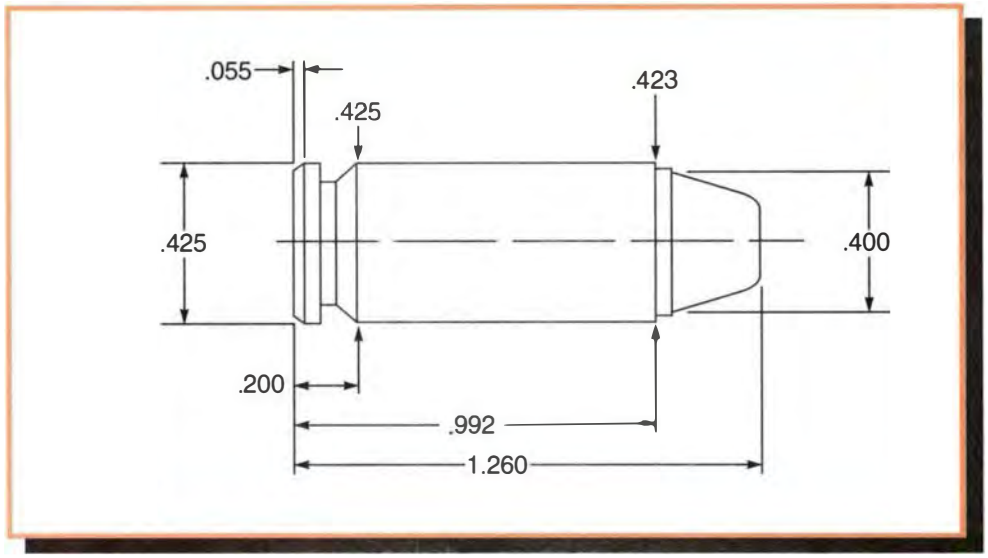


**Comments:**

This is a high performance semi-auto pistol cartridge with applications in law enforcement and hunting.

The 10mm Auto cartridge headspaces on the mouth and therefore case trimming must be uniform and accurate. Do not reduce cases below the recommended trim-to length. Additionally do not roll crimp bullets as this will prevent the case from properly headspacing on its mouth. A modest taper crimp is also suggested.

It is important not to seat bullets to a shorter length than listed in any handgun cartridge; but especially so in this one. Pressures can be raised dramatically with deep seating.

Winchester 231 frequently provided the best accuracy though not the highest velocities when used in this cartridge.

**Test Components:**

Cases . . . . . .Winchester, Norma
Trim-to Length . . . . . .982"
Primers . . . . . .CCI 300
Primer Size . . . . . .Large Pistol
Lyman Shell Holder . . . . . .No. 15
Jacketed Bullets Used . . . .Nosler JHP #44838, 135 gr.
Sierra JHP #8430, 150 gr.
Winchester Silvertip #SHP40, 155 gr.
Speer TMJ #4410, 165 gr.
Winchester Silvertip #SHP10, 175 gr.
Sierra JHP #8460, 180 gr.
Sierra FPJ #8480, 190 gr.
Hornady HP/XTP #40060, 200 gr.
Cast Bullets Used . . . . . .(sized to .401" dia)
#401654, 150 gr.
#401043, 175 gr.
#401638, 175 gr.

**Test Specifications: (Velocity & Pressure)**

Firearm Used . . . . . .Universal Receiver
Barrel Length . . . . . .5"
Twist . . . . . .1-16"
Groove Dia. . . . . .400"

***135 gr. Jacketed HP** — 1.225" OAL — BC: .093 SD: .121

| Powder | Sugg Starting Grains | Velocity fps | Pressure C.U.P. | Max Load Grains | Velocity fps | Pressure C.U.P. |
|---|---|---|---|---|---|---|
| Bullseye | 6.0 | 1163 | 23,300 | 7.3 | 1335 | 29,300 |
| Red Dot | 5.5 | 1063 | 17,100 | 7.2 | 1375 | 28,800 |
| Unique | 6.8 | 1127 | 19,800 | 8.3 | 1382 | 29,700 |
| 700X | 5.5 | 1094 | 19,800 | 7.1 | 1345 | 29,700 |
| **231** | **6.0** | **1097** | **20,300** | 7.7 | 1327 | 29,100 |
| AA#5 | 8.0 | 1102 | 15,700 | 9.8 | 1397 | 28,200 |

***150 gr. Jacketed HP** — 1.250" OAL — BC: .130 SD: .134

| Powder | Sugg Starting Grains | Velocity fps | Pressure C.U.P. | Max Load Grains | Velocity fps | Pressure C.U.P. |
|---|---|---|---|---|---|---|
| Bullseye | 5.5 | 1049 | 20,900 | 7.0 | 1263 | 28,500 |
| Red Dot | 4.7 | 864 | 19,300 | 6.5 | 1243 | 28,800 |
| Unique | 6.5 | 994 | 21,800 | 8.1 | 1265 | 29,500 |
| 700X | 5.0 | 937 | 20,700 | 6.8 | 1282 | 30,000 |
| 800X | 7.0 | 1029 | 20,200 | 9.0 | 1301 | 28,900 |
| **231** | 5.7 | 1053 | 20,700 | **7.5** | **1292** | **29,800** |
| HS-6 | 8.3 | 959 | 17,900 | 9.9 | 1278 | 27,200 |
| AA#5 | 7.0 | 986 | 18,100 | 9.0 | 1278 | 29,800 |

**Note:** Loads shown in shaded panels are maximum.
Loads shown in bold designate potentially most accurate load.
* Designates the use of Norma cases.

# 10mm Automatic

**155 gr. Jacketed Silvertip**
1.250" OAL
**BC:** .166
**SD:** .138

| Powder | Sugg Starting Grains | Velocity fps | Pressure C.U.P. | Max Load Grains | Velocity fps | Pressure C.U.P. |
|---|---|---|---|---|---|---|
| 231 | 6.5 | 1105 | 25,500 | 7.3 | 1229 | 28,900 |
| Universal | 6.5 | 973 | 14,200 | 7.3 | 1156 | 24,100 |
| Unique | 6.7 | 1085 | 22,000 | 7.5 | 1201 | 28,900 |
| N340 | 6.8 | 1058 | 20,700 | 7.6 | 1212 | 29,600 |
| WSF | 7.2 | 1061 | 20,100 | 8.0 | 1197 | 28,000 |
| Power Pistol | 8.0 | 1140 | 23,500 | 8.9 | 1275 | 29,000 |
| 800X | 8.8 | 1221 | 25,500 | 9.8 | 1315 | 28,000 |
| HS-6 | 9.5 | 1139 | 23,700 | 10.6 | 1308 | 29,800 |
| AA#7 | 11.2 | 1183 | 23,000 | 12.5 | 1324 | 29,800 |
| Blue Dot | 9.7 | 1158 | 23,500 | 10.8 | 1303 | 29,700 |
| **AA#9** | 14.0 | 1240 | 22,300 | **15.5** | **1343** | **27,900** |

**165 gr. TMJ**
1.250" OAL
**BC:** .135
**SD:** .147

| Powder | Sugg Starting Grains | Velocity fps | Pressure C.U.P. | Max Load Grains | Velocity fps | Pressure C.U.P. |
|---|---|---|---|---|---|---|
| 231 | 6.3 | 1045 | 22,500 | 7.1 | 1182 | 28,600 |
| Universal | 6.3 | 963 | 14,500 | 7.1 | 1118 | 23,700 |
| Unique | 6.5 | 1012 | 18,800 | 7.3 | 1172 | 27,300 |
| N340 | 6.5 | 1004 | 17,900 | 7.3 | 1172 | 28,300 |
| WSF | 6.9 | 1057 | 21,700 | 7.7 | 1182 | 26,200 |
| Power Pistol | 7.8 | 1157 | 23,000 | 8.7 | 1265 | 29,000 |
| 800X | 8.3 | 1133 | 21,600 | 9.3 | 1266 | 28,900 |
| HS-6 | 9.3 | 1098 | 21,500 | 10.4 | 1235 | 28,300 |
| AA#7 | 10.3 | 1035 | 18,300 | 11.5 | 1174 | 25,000 |
| Blue Dot | 9.1 | 1087 | 20,900 | 10.2 | 1230 | 27,400 |
| **AA#9** | 13.5 | 1183 | 20,900 | **15.0** | **1318** | **29,100** |

**175 gr. Jacketed Silvertip**
1.250" OAL
**BC:** .142
**SD:** .156

| Powder | Sugg Starting Grains | Velocity fps | Pressure C.U.P. | Max Load Grains | Velocity fps | Pressure C.U.P. |
|---|---|---|---|---|---|---|
| 231 | 5.9 | 1004 | 23,500 | 6.6 | 1109 | 28,900 |
| Universal | 5.8 | 930 | 18,800 | 6.5 | 1065 | 26,900 |
| Unique | 6.3 | 1011 | 23,600 | 7.0 | 1107 | 28,300 |
| N340 | 6.1 | 997 | 23,300 | 6.8 | 1096 | 28,800 |
| WSF | 6.4 | 984 | 22,900 | 7.2 | 1129 | 28,800 |
| Power Pistol | 7.2 | 1076 | 24,100 | 8.1 | 1199 | 29,700 |
| 800X | 8.1 | 1086 | 24,900 | 9.0 | 1209 | 29,000 |
| HS-6 | 8.6 | 1050 | 22,200 | 9.6 | 1186 | 29,300 |
| AA#7 | 10.2 | 1079 | 22,600 | 11.4 | 1201 | 28,600 |
| Blue Dot | 8.7 | 1048 | 21,400 | 9.7 | 1162 | 27,300 |
| **AA#9** | 12.5 | 1088 | 22,900 | **13.9** | **1212** | **27,000** |

***180 gr. Jacketed HP**
1.250" OAL
**BC:** .170
**SD:** .161

| Powder | Sugg Starting Grains | Velocity fps | Pressure C.U.P. | Max Load Grains | Velocity fps | Pressure C.U.P. |
|---|---|---|---|---|---|---|
| 700X | 4.5 | 892 | 17,300 | 5.8 | 1053 | 28,800 |
| Bullseye | 5.5 | 998 | 21,000 | 6.5 | 1088 | 29,300 |
| 231 | 5.9 | 1037 | 26,300 | 6.6 | 1125 | 28,700 |
| Unique | 5.8 | 1018 | 21,800 | 6.7 | 1064 | 28,100 |
| **Power Pistol** | 7.2 | 1107 | 24,800 | **8.0** | **1209** | **28,900** |
| 800X | 6.8 | 831 | 20,300 | 8.4 | 1073 | 28,000 |
| HS-6 | 8.1 | 1057 | 21,000 | 9.6 | 1225 | 28,700 |
| AA#7 | 9.5 | 984 | 18,000 | 11.5 | 1087 | 28,300 |
| Blue Dot | 8.1 | 939 | 18,000 | 10.3 | 1133 | 30,000 |

***190 gr. Jacketed FP**
1.250" OAL
**BC:** .190
**SD:** .170

| Powder | Sugg Starting Grains | Velocity fps | Pressure C.U.P. | Max Load Grains | Velocity fps | Pressure C.U.P. |
|---|---|---|---|---|---|---|
| Clays | 4.3 | 878 | 22,900 | 5.6 | 1071 | 29,800 |
| 700X | 4.8 | 951 | 20,300 | 5.8 | 1086 | 29,800 |
| Bullseye | 4.7 | 879 | 18,400 | 6.1 | 1088 | 28,200 |
| 231 | 5.8 | 980 | 22,900 | 6.5 | 1075 | 29,000 |
| Unique | 5.5 | 896 | 19,200 | 6.5 | 1001 | 27,600 |
| **Power Pistol** | 7.0 | 1060 | 25,000 | **7.8** | **1168** | **28,800** |
| 800X | 6.4 | 987 | 22,200 | 8.5 | 1189 | 29,300 |
| HS-6 | 7.7 | 744 | 20,700 | 9.2 | 1037 | 30,000 |
| AA#7 | 9.0 | 932 | 20,600 | 10.5 | 1106 | 28,000 |
| Blue Dot | 8.3 | 968 | 19,200 | 9.9 | 1175 | 28,600 |

***200 gr. Jacketed HP**
1.250" OAL
**BC:** .199
**SD:** .179

| Powder | Sugg Starting Grains | Velocity fps | Pressure C.U.P. | Max Load Grains | Velocity fps | Pressure C.U.P. |
|---|---|---|---|---|---|---|
| 700X | 4.4 | 936 | 19,900 | 5.8 | 1080 | 29,500 |
| Bullseye | 4.8 | 910 | 20,400 | 5.7 | 1059 | 26,500 |
| 231 | 5.6 | 984 | 24,600 | 6.3 | 1067 | 28,400 |
| Unique | 4.8 | 836 | 17,700 | 6.1 | 1071 | 29,000 |
| Power Pistol | 6.3 | 1000 | 22,700 | 7.1 | 1092 | 28,200 |
| **800X** | 5.9 | 963 | 22,600 | **7.6** | **1119** | **29,200** |
| HS-6 | 7.5 | 987 | 22,600 | 8.6 | 1126 | 29,500 |
| AA#7 | 9.0 | 987 | 19,900 | 10.6 | 1145 | 28,200 |
| Blue Dot | 8.0 | 1015 | 22,900 | 9.6 | 1148 | 29,900 |

**Note:** Loads shown in shaded panels are maximum.
Loads shown in bold designate potentially most accurate load.
* Designates the use of Norma cases.

# 10mm Automatic

***#401654**
150 gr. (#2 Alloy) 1.240" OAL
**BC:** .074
**SD:** .133

| Powder | Sugg Starting Grains | Velocity fps | Pressure C.U.P. | Max Load Grains | Velocity fps | Pressure C.U.P. |
|---|---|---|---|---|---|---|
| 700X | 5.5 | 1167 | 24,000 | 6.5 | 1310 | 30,000 |
| Red Dot | 5.5 | 1144 | 21,800 | 6.5 | 1300 | 29,700 |
| Bullseye | 6.2 | 1205 | 24,600 | 7.2 | 1336 | 29,000 |
| **231** | 6.5 | 1206 | 23,800 | **7.4** | **1320** | **28,500** |
| Unique | 6.3 | 1133 | 20,300 | 7.5 | 1323 | 29,000 |
| AA#5 | 8.0 | 1205 | 21,000 | 9.0 | 1343 | 28,900 |
| 800X | 8.4 | 1265 | 23,700 | 9.4 | 1381 | 28,600 |
| Blue Dot | 9.7 | 1218 | 23,600 | 11.0 | 1369 | 29,400 |

***#401043**
175 gr. (#2 Alloy) 1.260" OAL
**BC:** .098
**SD:** .155

| Powder | Sugg Starting Grains | Velocity fps | Pressure C.U.P. | Max Load Grains | Velocity fps | Pressure C.U.P. |
|---|---|---|---|---|---|---|
| 700X | 5.2 | 1102 | 24,700 | 5.8 | 1170 | 28,200 |
| Red Dot | 5.5 | 1087 | 24,500 | 6.2 | 1194 | 29,300 |
| **Bullseye** | 5.5 | 1069 | 22,200 | **6.5** | **1199** | **28,300** |
| 231 | 5.5 | 1023 | 20,300 | 6.7 | 1189 | 28,800 |
| Unique | 6.1 | 1097 | 23,300 | 7.0 | 1224 | 28,800 |
| N340 | 6.4 | 1127 | 24,200 | 7.2 | 1214 | 28,300 |
| AA#5 | 7.0 | 1038 | 18,100 | 8.2 | 1236 | 28,400 |
| Power Pistol | 7.4 | 1155 | 23,300 | 8.3 | 1265 | 28,400 |
| 800X | 7.0 | 1090 | 20,300 | 8.2 | 1242 | 27,600 |
| HS-6 | 8.0 | 1071 | 20,300 | 9.4 | 1236 | 29,000 |
| Blue Dot | 9.0 | 1100 | 21,100 | 10.4 | 1245 | 28,100 |

***#401638**
175 gr. (#2 Alloy) 1.253" OAL
**BC:** .088
**SD:** .155

| Powder | Sugg Starting Grains | Velocity fps | Pressure C.U.P. | Max Load Grains | Velocity fps | Pressure C.U.P. |
|---|---|---|---|---|---|---|
| Red Dot | 5.4 | 1113 | 23,900 | 6.0 | 1152 | 28,700 |
| **Bullseye** | 5.9 | 1115 | 23,500 | **6.4** | **1197** | **28,400** |
| 231 | 5.9 | 1115 | 24,000 | 6.5 | 1181 | 29,400 |
| Unique | 6.1 | 1104 | 22,900 | 6.8 | 1180 | 28,900 |
| WSF | 6.2 | 1094 | 22,800 | 7.0 | 1176 | 28,600 |
| N340 | 6.3 | 1052 | 21,700 | 7.1 | 1190 | 29,100 |
| AA#5 | 7.2 | 1138 | 24,000 | 7.6 | 1196 | 28,700 |
| Power Pistol | 7.3 | 1139 | 23,300 | 8.2 | 1239 | 28,100 |
| 800X | 7.7 | 1092 | 23,300 | 8.6 | 1269 | 28,300 |
| Blue Dot | 9.3 | 1175 | 23,800 | 10.4 | 1275 | 29,900 |

**Note:** Loads shown in shaded panels are maximum.
Loads shown in bold designate potentially most accurate load.
* Designates the use of Norma cases.

# 41 Remington Magnum

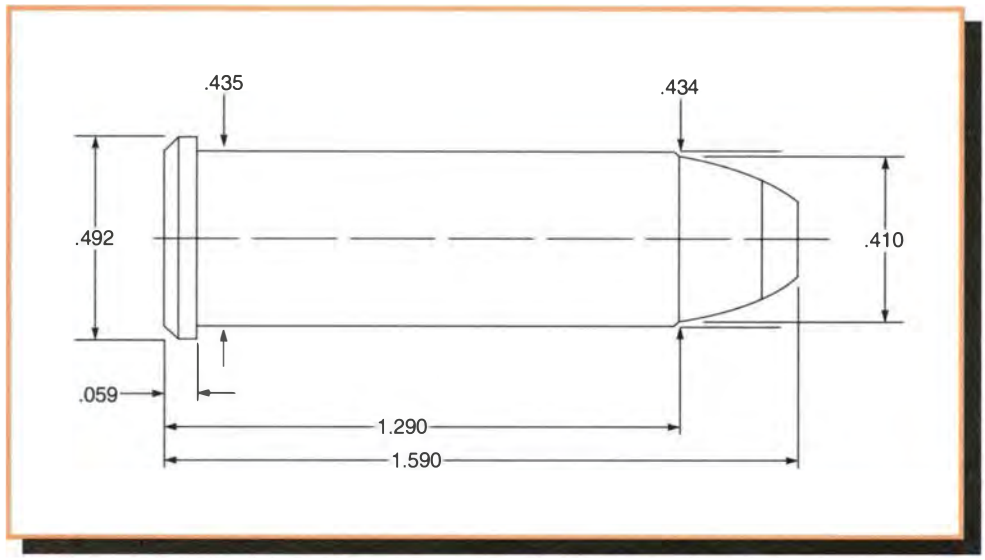


**Comments:**

Remington and Smith & Wesson introduced the 41 Magnum in the Model 57 revolver in 1964. The cartridge never gained a great deal of acceptance with the law enforcement market for which it was intended. Nor did it ever become terribly popular with the civil market outside of a dedicated handful of shooters, notably handgun hunters. The 41 Magnum offers shooters flatter trajectory with a bit less muzzle blast than the 44 Magnum. Those reloading for the 41 Magnum have a decent, if not extensive, selection of bullets to choose from. Pressure levels of the 41 Magnum require cast bullet #410610 be cast of a fairly hard alloy such as Linoty e or equivalent. Alliant's 2400 and AA#9 produced the best results in our testing. This data can be used in the T/C Contender.

**Test Components:**

Cases . . . . . .Winchester
Trim-to Length . . . . . .1.280"
Primers . . . . . .Winchester WLP
Primer Size . . . . . .Large Pistol
Lyman Shell Holder . . . . . .No. 30
Jacketed Bullets Used . . . . .Sierra JHC #8500, 170 gr.
Speer JHP #4405, 200 gr.
Hornady HP/XTP #41000, 210 gr.
Speer JSP #4417, 220 gr.
Cast Bullets Used . . . . . .(sized to .410" dia)
*gas check bullet *#410610, 215 gr.

**Test Specifications:**
**(Velocity & Pressure)**

Firearm Used . . . . . .Universal Receiver
Barrel Length . . . . . .4"
Twist . . . . . .1-18¾"
Groove Dia. . . . . .409"

**170 gr. Jacketed HC**
1.580" OAL
**BC:** .123
**SD:** .144

| Powder | Sugg Starting Grains | Velocity fps | Pressure C.U.P. | Max Load Grains | Velocity fps | Pressure C.U.P. |
|---|---|---|---|---|---|---|
| Unique | 9.9 | 1185 | 27,800 | 11.0 | 1381 | 38,000 |
| Blue Dot | 13.7 | 1113 | 24,700 | 15.3 | 1534 | 37,500 |
| AA#9 | 18.0 | 1240 | 25,200 | 20.0 | 1597 | 37,000 |
| **2400** | 17.5 | 1279 | 29,200 | **19.5** | **1467** | **36,400** |
| H110 | 24.1 | 1582 | 29,900 | 25.2 | 1700 | 36,800 |
| IMR-4227 | 20.0 | 1243 | 31,300 | 22.5 | 1392 | 36,600 |

**200 gr. Jacketed HC**
1.590" OAL
**BC:** .113
**SD:** .170

| Powder | Sugg Starting Grains | Velocity fps | Pressure C.U.P. | Max Load Grains | Velocity fps | Pressure C.U.P. |
|---|---|---|---|---|---|---|
| Unique | 8.5 | 979 | 29,200 | 9.5 | 1157 | 38,900 |
| Blue Dot | 11.7 | 1024 | 28,300 | 13.0 | 1296 | 38,700 |
| AA#9 | 15.7 | 1149 | 29,300 | 17.5 | 1397 | 36,100 |
| **2400** | 16.0 | 1169 | 33,200 | **17.8** | **1392** | **38,500** |
| H110 | 20.0 | 1314 | 32,400 | 21.0 | 1533 | 37,600 |
| IMR-4227 | 17.5 | 994 | 29,000 | 19.5 | 1225 | 39,500 |

**Note:** Loads shown in shaded panels are maximum.
Loads shown in bold designate potentially most accurate load.

# 41 Remington Magnum

**210 gr. Jacketed HP**
1.585" OAL
**BC:** .182
**SD:** .178

| Powder | Sugg Starting Grains | Velocity fps | Pressure C.U.P. | Max Load Grains | Velocity fps | Pressure C.U.P. |
|---|---|---|---|---|---|---|
| Unique | 9.0 | 1021 | 33,400 | 10.0 | 1178 | 38,700 |
| Blue Dot | 11.9 | 952 | 25,900 | 13.3 | 1207 | 37,000 |
| **AA#9** | 15.9 | 1060 | 26,500 | **17.7** | **1323** | **36,900** |
| 2400 | 16.0 | 1143 | 32,200 | 17.8 | 1262 | 35,700 |
| H110 | 20.5 | 1387 | 35,400 | 21.5 | 1473 | 37,000 |
| IMR-4227 | 18.0 | 1017 | 30,600 | 20.0 | 1212 | 38,800 |

**220 gr. Jacketed SP**
1.590" OAL
**BC:** .137
**SD:** .178

| Powder | Sugg Starting Grains | Velocity fps | Pressure C.U.P. | Max Load Grains | Velocity fps | Pressure C.U.P. |
|---|---|---|---|---|---|---|
| Unique | 7.9 | 924 | 30,100 | 8.8 | 1060 | 38,600 |
| Blue Dot | 10.8 | 929 | 27,800 | 12.0 | 1111 | 36,500 |
| **AA#9** | 15.0 | 1083 | 30,700 | **16.7** | **1285** | **37,900** |
| 2400 | 14.5 | 1023 | 30,100 | 16.2 | 1198 | 37,000 |
| H110 | 18.6 | 1268 | 33,500 | 19.4 | 1397 | 39,100 |
| IMR-4227 | 16.2 | 920 | 30,900 | 18.0 | 1098 | 38,700 |

**#410610**
215 gr. (#2 Alloy) 1.575" OAL
**BC:** .158
**SD:** .183

| Powder | Sugg Starting Grains | Velocity fps | Pressure C.U.P. | Max Load Grains | Velocity fps | Pressure C.U.P. |
|---|---|---|---|---|---|---|
| **Unique** | **7.8** | **960** | **25,800** | 8.7 | 1111 | 36,900 |
| SR-4756 | 9.0 | 938 | 27,000 | 10.0 | 1114 | 36,800 |
| Blue Dot | 10.2 | 941 | 24,600 | 11.4 | 1121 | 34,200 |
| AA#7 | 13.0 | 1105 | 30,400 | 14.5 | 1276 | 35,700 |
| AA#9 | 15.0 | 1110 | 29,200 | 16.7 | 1343 | 38,000 |
| 2400 | 14.5 | 1044 | 29,000 | 16.2 | 1312 | 38,100 |
| IMR-4227 | 15.7 | 891 | 26,800 | 17.5 | 1105 | 35,700 |

**Note:** Loads shown in shaded panels are maximum.
Loads shown in bold designate potentially most accurate load.

# 44-40 Winchester (44WCF)

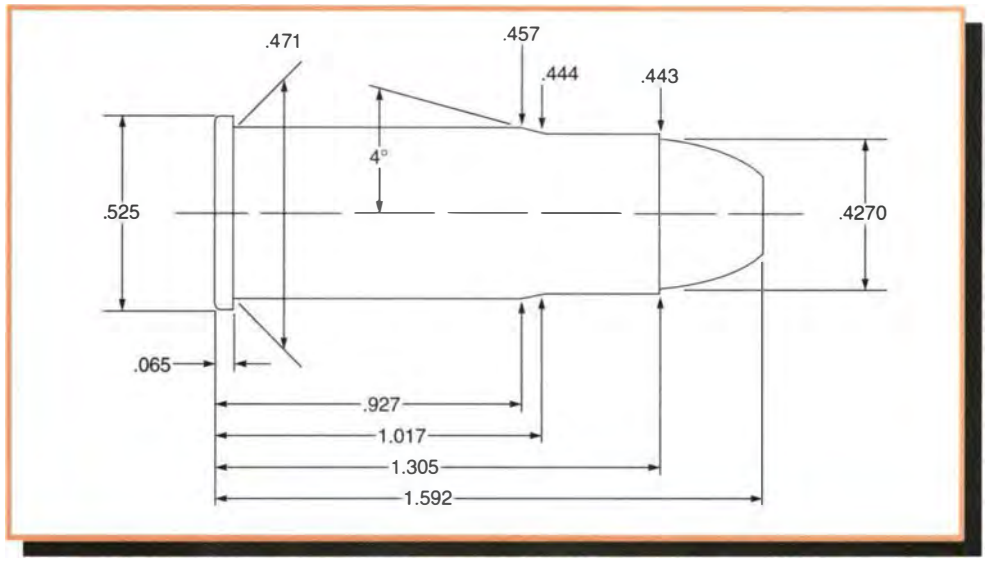


**Comments:**

This is a very old cartridge and care should be taken not to use the data listed in any handgun which has deteriorated. Additionally this data should not be used in conjunction with any firearm designed for black powder cartridges.

Individual tolerances vary greatly in firearms chambered for this cartridge, even among the same make and model.

Therefore exercise extreme caution when developing loads as you work up from the suggested starting grains listing.

Never load old brass as it may be of the weaker balloon head type or have been fired at one time with corrosive primers.

**Test Components:**

Cases . . . . . .Winchester
Trim-to Length . . . . . .1.295"
Primers . . . . . .Winchester WLP
Primer Size . . . . . .Large Pistol
Lyman Shell Holder . . . . . .No. 14B
Cast Bullets Used . . . . . .(sized to .429" dia)
#427666, 200 gr.
#427098, 205 gr.

**Test Specifications:**
**(Velocity & Pressure)**

Firearm Used . . . . . .Universal Receiver
Barrel Length . . . . . .6"
Twist . . . . . .1-20"
Groove Dia. . . . . .428"

**#427666**
200 gr. (#2 Alloy) 1.580" OAL
**BC:** .149
**SD:** .155

| Powder | Sugg Starting Grains | Velocity fps | Pressure C.U.P. | Max Load Grains | Velocity fps | Pressure C.U.P. |
|---|---|---|---|---|---|---|
| **700X** | **5.0** | **808** | **7,400** | 6.4 | 979 | 12,600 |
| AA#2 | 6.0 | 824 | 7,400 | 6.5 | 996 | 12,800 |
| Bullseye | 5.6 | 852 | 7,700 | 7.0 | 1020 | 12,600 |
| Unique | 6.9 | 853 | 6,700 | 8.6 | 1044 | 12,600 |
| SR-4756 | 7.5 | 727 | 5,900 | 9.4 | 988 | 12,300 |
| 2400 | 13.0 | 885 | 7,900 | 16.5 | 1077 | 12,800 |
| IMR-4227 | 15.0 | 910 | 7,700 | 17.0 | 984 | 12,600 |

**#427098**
205 gr. (#2 Alloy) 1.592" OAL
**BC:** .103
**SD:** .159

| Powder | Sugg Starting Grains | Velocity fps | Pressure C.U.P. | Max Load Grains | Velocity fps | Pressure C.U.P. |
|---|---|---|---|---|---|---|
| **700X** | **4.8** | **789** | **7,200** | 6.0 | 936 | 12,100 |
| AA#2 | 5.4 | 773 | 6,300 | 6.3 | 900 | 10,600 |
| Bullseye | 5.2 | 833 | 8,200 | 6.5 | 962 | 12,700 |
| Unique | 6.3 | 739 | 5,700 | 7.9 | 980 | 12,000 |
| SR-4756 | 7.4 | 773 | 5,700 | 9.3 | 961 | 12,400 |
| 2400 | 12.0 | 751 | 5,100 | 15.0 | 974 | 12,400 |
| IMR-4227 | 12.5 | 699 | 5,300 | 15.8 | 915 | 12,000 |

**Note:** Loads shown in shaded panels are maximum.
Loads shown in bold designate potentially most accurate load.

# 44 Smith & Wesson Special

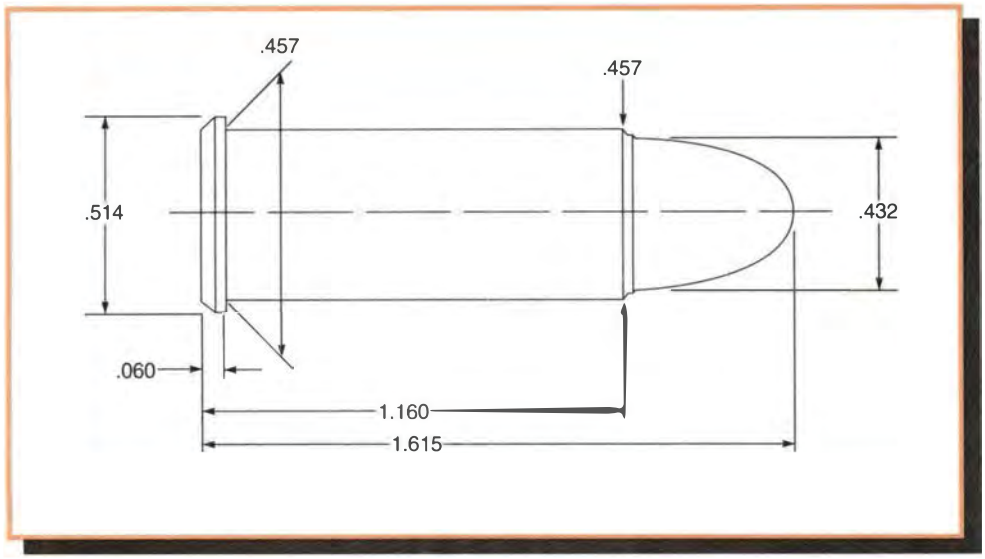


**Comments:**

The 44 Special came into being in 1907 as a lengthened version of the old 44 Russian cartridge in order to better utilize smokeless powder. The cartridge developed a sterling reputation for accuracy in the following decades. The large number of older revolvers of weaker construction kept commercially loaded ammunition on the mild side. Reloaders with a good heavy framed revolver could significantly improve over the factory ballistics by careful handloading. Elmer Keith used the 44 Special extensively in pursuit of high-velocity handgun loads. His efforts culminated in the introduction of the 44 Remington Magnum in 1955. The 44 Special subsequently fell by the wayside for quite a few years but interest has picked up recently. Two factors contributed to its recent popularity: Cowboy Action Shooting, and new generation compact revolvers chambered exclusively for the 44 Special. Cast bullets should be sized to either groove diameter or .001" over. Shooters should slug their bore before beginning to reload, especially if they have an older revolver. Shooters should make up a dummy round to ensure that the finished cartridge will chamber easily in all cylinders. Elmer Keith designed bullet #429421, which has been very popular in this cartridge for many years. 231, Unique, and 2400 produce good results in the 44 Special.

**Test Components:**

Cases . . . . . .Winchester
Trim-to Length . . . . . .1.150"
Primers . . . . . .CCI 300
Primer Size . . . . . .Large Pistol
Lyman Shell Holder . . . . . .No. 7
Jacketed Bullets Used . . . . .Sierra JHC #8600, 180 gr.
Hornady HP/XTP #44100, 200 gr.
Speer JHP #4435, 225 gr.
Speer JHP #4453, 240 gr.
Cast Bullets Used . . . . . .(sized to .429" dia)
*gas check bullet #427098, 205 gr.
*#429215, 210 gr.
#429383, 245 gr.
#429421, 245 gr.
*#429244, 255 gr.

**Test Specifications:**
**(Velocity & Pressure)**

Firearm Used . . . . . .Universal Receiver
Barrel Length . . . . . .4" & 7½"
Twist . . . . . .1-20"
Groove Dia. . . . . .429"

**180 gr. Jacketed HC** — 1.470" OAL — **BC:** .140 **SD:** .139

| Powder | Sugg Starting Grains | Velocity fps | Pressure C.U.P. | Max Load Grains | Velocity fps | Pressure C.U.P. |
|---|---|---|---|---|---|---|
| Red Dot | 6.4 | 793 | 11,600 | 7.1 | 850 | 13,700 |
| 231 | 6.5 | 689 | 9,300 | 7.5 | 832 | 13,600 |
| **2400** | **14.0** | **674** | **8,100** | 15.8 | 851 | 13,300 |
| IMR-4227 | 15.1 | 685 | 9,400 | 16.8 | 862 | 13,100 |

**200 gr Jacketed HP** — 1.495" OAL — **BC:** .170 **SD:** .155

| Powder | Sugg Starting Grains | Velocity fps | Pressure C.U.P. | Max Load Grains | Velocity fps | Pressure C.U.P. |
|---|---|---|---|---|---|---|
| Red Dot | 5.5 | 660 | 9,000 | 6.3 | 776 | 13,800 |
| 231 | 6.4 | 707 | 11,100 | 7.1 | 797 | 13,800 |
| **2400** | **12.0** | **599** | **8,000** | 13.5 | 838 | 13,700 |
| IMR-4227 | 14.3 | 657 | 10,200 | 15.8 | 882 | 13,900 |

**Note:** Loads shown in shaded panels are maximum.
Loads shown in bold designate potentially most accurate load.

# 44 Smith & Wesson Special

**225 gr. Jacketed HP**
1.460" OAL
**BC:** .146
**SD:** .175

| Powder | Sugg Starting Grains | Velocity fps | Pressure C.U.P. | Max Load Grains | Velocity fps | Pressure C.U.P. |
|---|---|---|---|---|---|---|
| Red Dot | 4.9 | 590 | 10,900 | 5.7 | 767 | 13,900 |
| 231 | 5.0 | 585 | 11,300 | 5.8 | 729 | 13,900 |
| 2400 | 11.6 | 653 | 10,600 | 13.3 | 790 | 13,800 |
| **IMR-4227** | **12.3** | **640** | **10,600** | 14.0 | 749 | 13,400 |

**240 gr. Jacketed SP**
1.465" OAL
**BC:** .165
**SD:** .186

| Powder | Sugg Starting Grains | Velocity fps | Pressure C.U.P. | Max Load Grains | Velocity fps | Pressure C.U.P. |
|---|---|---|---|---|---|---|
| Red Dot | 5.0 | 671 | 10,800 | 5.6 | 713 | 13,600 |
| 231 | 5.0 | 654 | 8,300 | 5.6 | 759 | 13,900 |
| 2400 | 12.1 | 604 | 10,300 | 13.5 | 723 | 13,000 |
| **IMR-4227** | **13.3** | **616** | **11,100** | 14.8 | 711 | 13,300 |

**#427098**
205 gr. (#2 Alloy) 1.537" OAL
**BC:** .103
**SD:** .159

| Powder | Sugg Starting Grains | Velocity fps | Pressure C.U.P. | Max Load Grains | Velocity fps | Pressure C.U.P. |
|---|---|---|---|---|---|---|
| **Unique** | 7.0 | 736 | 10,500 | **8.2** | **869** | **14,000** |
| SR-7625 | 6.8 | 761 | 9,700 | 7.7 | 838 | 12,600 |
| HS-7 | 10.0 | 732 | 10,100 | 11.6 | 874 | 13,600 |
| Blue Dot | 10.5 | 747 | 10,000 | 12.0 | 855 | 13,300 |
| 2400 | 13.3 | 734 | 10,800 | 15.2 | 870 | 13,500 |

**#429215**
210 gr. (#2 Alloy) 1.500" OAL
**BC:** .188
**SD:** .163

| Powder | Sugg Starting Grains | Velocity fps | Pressure C.U.P. | Max Load Grains | Velocity fps | Pressure C.U.P. |
|---|---|---|---|---|---|---|
| **Unique** | 6.3 | 729 | 9,500 | **7.7** | **884** | **13,600** |
| SR-7625 | 6.2 | 732 | 10,900 | 6.8 | 801 | 13,500 |
| HS-7 | 9.0 | 659 | 8,100 | 11.0 | 841 | 12,600 |
| Blue Dot | 9.5 | 689 | 8,800 | 11.0 | 885 | 13,400 |
| 2400 | 13.0 | 792 | 11,300 | 14.5 | 905 | 14,000 |

***#429383**
245 gr. (#2 Alloy) 1.570" OAL
**BC:** .191
**SD:** .190

| Powder | Sugg Starting Grains | Velocity fps | Pressure C.U.P. | Max Load Grains | Velocity fps | Pressure C.U.P. |
|---|---|---|---|---|---|---|
| 231 | **4.6** | **703** | **9,200** | 5.7 | 843 | 13,600 |
| Universal | 5.7 | 675 | 7,400 | 7.0 | 938 | 13,700 |
| Unique | 5.2 | 771 | 10,100 | 6.5 | 905 | 14,000 |
| SR-4756 | 6.4 | 704 | 8,300 | 8.0 | 898 | 14,000 |
| HS-7 | 7.6 | 729 | 8,700 | 9.5 | 910 | 13,700 |
| 2400 | 10.0 | 706 | 7,600 | 12.5 | 935 | 13,900 |
| IMR-4227 | 12.6 | 784 | 7,500 | 14.5 | 879 | 13,700 |

**#429421**
245 gr. (#2 Alloy) 1.570" OAL
**BC:** .209
**SD:** .190

| Powder | Sugg Starting Grains | Velocity fps | Pressure C.U.P. | Max Load Grains | Velocity fps | Pressure C.U.P. |
|---|---|---|---|---|---|---|
| 231 | 4.4 | 679 | 7,700 | 5.5 | 821 | 13,100 |
| **Unique** | 6.0 | 649 | 10,300 | **6.9** | **767** | **13,300** |
| SR-4756 | 6.8 | 661 | 9,000 | 8.1 | 780 | 13,800 |
| HS-7 | 9.1 | 728 | 11,300 | 10.4 | 828 | 14,000 |
| 2400 | 11.4 | 704 | 10,400 | 13.2 | 797 | 13,800 |
| IMR-4227 | 11.7 | 674 | 7,100 | 14.7 | 872 | 13,900 |

**#429244**
255 gr. (#2 Alloy) 1.550" OAL
**BC:** .201
**SD:** .198

| Powder | Sugg Starting Grains | Velocity fps | Pressure C.U.P. | Max Load Grains | Velocity fps | Pressure C.U.P. |
|---|---|---|---|---|---|---|
| Unique | 5.7 | 635 | 10,200 | 6.6 | 747 | 13,600 |
| SR-4756 | 6.2 | 584 | 8,400 | 7.5 | 765 | 14,000 |
| **HS-7** | 8.5 | 606 | 8,700 | **10.0** | **743** | **13,400** |
| 2400 | 10.5 | 602 | 8,500 | 12.3 | 742 | 12,700 |

**Note:** Loads shown in shaded panels are maximum.
Loads shown in bold designate potentially most accurate load.
* Designates fired in a 7½" barrel.

# 44 Remington Magnum

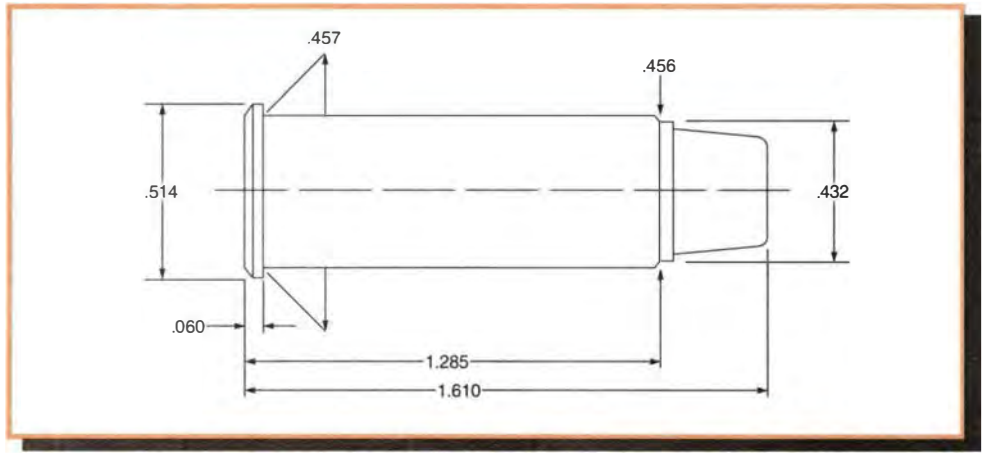


**Comments:**

The 44 Remington Magnum is the product of Elmer Keith's experimentation with high-pressure loadings in the 44 Special during the early 1950s. Smith & Wesson first produced revolvers for it in 1955 and Sturm, Ruger & Co. soon followed. The 44 Magnum has since been offered by all of the major handgun manufacturers and most of the smaller ones as well. It has also proven an effective short-range brush cartridge when chambered in various lever action and semiautomatic carbines. The 44 Magnum requires practice for the average shooter to shoot well due to its noticeable recoil and muzzle blast. Many new owners of 44 Magnums fire 44 Specials in their revolvers to acclimate themselves to the gun or for use as a general purpose target load.

This cartridge offers a lot to the hand loader. It has a high degree of accuracy, an extensive selection of bullet designs and weights, and is well suited to cast bullets. The loads listed for cast bullet #429215, #429303, 429244, #429421, #429650, and #429667 exceed the standard maximum cartridge length. However, the cylinders of most newer revolvers chambered for 44 Magnum will accept the listed overall length. All bullets must be well crimped to prevent bullet movement under recoil. Bullet # 429215 features a gas check and is a good general purpose bullet. Elmer Keith designed bullet # 429421 and many handloaders consider it to be *the* bullet for loading the 44 Magnum. Cast bullets should be made of a hard alloy, preferably Linotype or an equivalent of 22 bhn. Alliant 2400 is a favored powder among those loading the 44 Magnum. Winchester 296 and Hodgdon's H-110 are also popular for full power loads. This data can be used for the T/C Contender. Shooters loading for lever action rifles should refer to the rifle data section for more approximate velocity levels.

**Test Components:**

Cases . . . . . .Remington
Trim-to Length . . . . . .1.275"
Primers . . . . . .CCI 300 & 350
Primer Size . . . . . .Large Pistol, Std. & Magnum
Lyman Shell Holder . . . . . .No. 7
Jacketed Bullets Used . . . . .Sierra JHC #8600, 180 gr.
Hornady HP/XTP #44100, 200 gr.
Speer JHP #4435, 225 gr.
Sierra JHC #8610, 240 gr.
Speer JHP #4453, 240 gr.
Hornady FP #4300, 265 gr.
Sierra JSP #8630, 300 gr.
Cast Bullets Used. . . . . .(sized to .429" dia)
*gas check bullet *#429303, 200 gr.
*#429215, 210 gr.
#429667, 240 gr.
#429421, 245 gr.
*#429244, 255 gr.
*#429650, 300 gr.

**Test Specifications:**
**(Velocity & Pressure)**

Firearm Used . . . . . .Universal Receiver
Barrel Length . . . . . .4"
Twist . . . . . .1-20"
Groove Dia. . . . . .429"

**180 gr. Jacketed HC**
1.610" OAL
**BC:** .130
**SD:** .139

| Powder | Sugg Starting Grains | Velocity fps | Pressure C.U.P. | Max Load Grains | Velocity fps | Pressure C.U.P. |
|---|---|---|---|---|---|---|
| Unique | 12.0 | 1061 | 25,100 | 13.6 | 1301 | 35,700 |
| 231 | 10.2 | 1077 | 22,100 | 13.0 | 1267 | 36,300 |
| SR-4756 | 11.4 | 970 | 17,400 | 13.9 | 1262 | 34,400 |
| AA#5 | 12.8 | 976 | 16,400 | 16.0 | 1344 | 36,000 |
| HS-7 | 17.8 | 1111 | 24,200 | 20.6 | 1341 | 36,300 |
| Blue Dot | 17.8 | 1126 | 25,800 | 20.2 | 1404 | 36,400 |
| **2400** | 21.3 | 1103 | 24,800 | **25.5** | **1370** | **36,400** |
| *H-110 | 29.0 | 1541 | 31,700 | 30.0 | 1587 | 34,400 |
| *296 | 29.0 | 1498 | 32,400 | 30.0 | 1563 | 36,700 |
| IMR-4227 | 24.2 | 1136 | 27,600 | 27.0 | 1317 | 34,800 |
| *H-4227 | 25.0 | 1306 | 30,600 | 27.8 | 1440 | 37,600 |

**Note:** Loads shown in shaded panels are maximum.
Loads shown in bold designate potentially most accurate load.
* Designates the use of magnum primers.
\+ Designates a compressed powder charge.

# 44 Remington Magnum

**200 gr. Jacketed HP**
1.610" OAL
**BC:** .170
**SD:** .155

| Powder | Sugg Starting Grains | Velocity fps | Pressure C.U.P. | Max Load Grains | Velocity fps | Pressure C.U.P. |
|---|---|---|---|---|---|---|
| **Unique** | **10.5** | **905** | **21,100** | 13.2 | 1148 | 35,100 |
| SR-4756 | 11.0 | 894 | 18,500 | 13.6 | 1164 | 36,300 |
| 800X | 12.0 | 861 | 20,200 | 14.9 | 1239 | 36,100 |
| AA#7 | 18.0 | 1163 | 28,800 | 20.0 | 1365 | 38,600 |
| Blue Dot | 15.7 | 942 | 19,600 | 18.7 | 1245 | 35,100 |
| N110 | 21.0 | 1142 | 25,500 | 24.0+ | 1381 | 38,700 |
| 2400 | 19.5 | 972 | 23,100 | 23.6 | 1227 | 35,000 |
| *H-110 | 27.7 | 1444 | 34,600 | 28.8 | 1492 | 39,800 |
| *296 | 27.0 | 1432 | 31,700 | 28.3 | 1493 | 37,000 |
| IMR-4227 | 22.8 | 1000 | 22,800 | 26.4 | 1261 | 36,600 |
| *H-4227 | 23.8 | 1221 | 31,000 | 26.5 | 1383 | 39,000 |

**225 gr. Jacketed HP**
1.610" OAL
**BC:** .146
**SD:** .175

| Powder | Sugg Starting Grains | Velocity fps | Pressure C.U.P. | Max Load Grains | Velocity fps | Pressure C.U.P. |
|---|---|---|---|---|---|---|
| **Unique** | **10.8** | **1021** | **29,900** | 12.0 | 1200 | 39,300 |
| SR-4756 | 10.2 | 865 | 20,800 | 12.6 | 1123 | 36,500 |
| 800X | 12.0 | 958 | 27,700 | 14.7 | 1178 | 36,300 |
| AA#7 | 15.5 | 836 | 23,300 | 19.0 | 1227 | 37,300 |
| Blue Dot | 14.0 | 982 | 28,700 | 15.7 | 1264 | 37,500 |
| N110 | 19.0 | 1168 | 30,800 | 21.1 | 1354 | 38,000 |
| 2400 | 17.7 | 935 | 22,300 | 22.0 | 1199 | 36,000 |
| *H-110 | 25.0 | 1348 | 34,100 | 26.0 | 1415 | 39,300 |
| *296 | 24.0 | 1112 | 27,600 | 25.0 | 1235 | 33,100 |
| IMR-4227 | 20.4 | 1010 | 24,800 | 24.0 | 1205 | 35,800 |
| *H-4227 | 22.5 | 1027 | 33,600 | 25.0 | 1182 | 38,800 |

**240 gr. Jacketed HC**
1.610" OAL
**BC:** .172
**SD:** .186

| Powder | Sugg Starting Grains | Velocity fps | Pressure C.U.P. | Max Load Grains | Velocity fps | Pressure C.U.P. |
|---|---|---|---|---|---|---|
| Unique | 10.3 | 957 | 31,400 | 11.5 | 1074 | 39,000 |
| SR-4756 | 9.9 | 854 | 23,700 | 12.3 | 1072 | 35,800 |
| 800X | 11.0 | 776 | 23,700 | 13.7 | 1079 | 37,300 |
| Blue Dot | 13.4 | 939 | 29,300 | 14.9 | 1155 | 38,600 |
| N110 | 17.3 | 999 | 25,500 | 19.5+ | 1189 | 37,400 |
| 2400 | 17.5 | 993 | 30,400 | 19.5 | 1179 | 38,400 |
| AA#9 | 19.0 | 829 | 22,300 | 22.2 | 1135 | 33,500 |
| *H-110 | 22.5 | 1169 | 34,200 | 23.5 | 1271 | 38,800 |
| *296 | 22.5 | 1168 | 34,700 | 23.5 | 1264 | 39,200 |
| **IMR-4227** | 19.3 | 921 | 22,600 | **23.1+** | **1177** | **36,800** |
| *H-4227 | 20.5 | 1032 | 30,100 | 23.0+ | 1167 | 37,800 |

**240 gr. Jacketed HP**
1.610" OAL
**BC:** .165
**SD:** .186

| Powder | Sugg Starting Grains | Velocity fps | Pressure C.U.P. | Max Load Grains | Velocity fps | Pressure C.U.P. |
|---|---|---|---|---|---|---|
| Unique | 10.8 | 951 | 30,500 | 12.0 | 1084 | 38,700 |
| 800X | 11.2 | 807 | 24,700 | 13.9 | 1068 | 36,500 |
| Blue Dot | 14.4 | 960 | 29,000 | 16.0 | 1160 | 38,400 |
| N110 | 18.7 | 1052 | 31,000 | 20.8 | 1217 | 39,400 |
| 2400 | 18.4 | 1028 | 30,600 | 20.5 | 1154 | 37,700 |
| AA#9 | 19.0 | 815 | 22,100 | 22.0 | 1195 | 37,100 |
| *H-110 | 23.5 | 1196 | 35,900 | 24.5 | 1233 | 37,400 |
| *296 | 23.0 | 1193 | 34,000 | 24.0 | 1292 | 38,500 |
| **IMR-4227** | 19.3 | 884 | 23,100 | **23.1** | **1109** | **36,000** |
| *H-4227 | 21.8 | 1021 | 30,500 | 24.2 | 1181 | 38,600 |

**265 gr. Jacketed FP**
1.610" OAL
**BC:** .189
**SD:** .205

| Powder | Sugg Starting Grains | Velocity fps | Pressure C.U.P. | Max Load Grains | Velocity fps | Pressure C.U.P. |
|---|---|---|---|---|---|---|
| 800X | 10.7 | 745 | 25,400 | 13.4 | 999 | 36,700 |
| Blue Dot | 12.6 | 883 | 29,500 | 14.0 | 1051 | 38,600 |
| N110 | 16.6 | 965 | 29,800 | 18.5 | 1133 | 38,900 |
| **2400** | **16.5** | **937** | **31,800** | 18.3 | 1105 | 38,700 |
| AA#9 | 18.0 | 823 | 25,300 | 21.3 | 1066 | 35,600 |
| *H-110 | 20.6 | 1036 | 33,200 | 21.5 | 1140 | 38,400 |
| *296 | 21.1 | 1092 | 35,000 | 22.0 | 1150 | 38,700 |
| IMR-4227 | 18.5 | 870 | 23,800 | 22.0 | 1088 | 34,800 |
| *H-4227 | 19.3 | 950 | 29,600 | 21.5 | 1116 | 37,400 |

**300 gr. Jacketed SP**
1.720" OAL
**BC:** .250
**SD:** .232

| Powder | Sugg Starting Grains | Velocity fps | Pressure C.U.P. | Max Load Grains | Velocity fps | Pressure C.U.P. |
|---|---|---|---|---|---|---|
| 800X | 10.0 | 785 | 25,200 | 12.5 | 968 | 35,200 |
| Blue Dot | 12.4 | 765 | 26,800 | 13.5 | 923 | 36,800 |
| N110 | 16.0 | 870 | 27,000 | 17.5 | 965 | 33,600 |
| 2400 | 15.7 | 820 | 30,300 | 17.5 | 934 | 37,800 |
| AA#9 | 17.5 | 895 | 27,200 | 19.3 | 1020 | 35,200 |
| *H-110 | 19.6 | 909 | 34,500 | 20.5 | 982 | 38,300 |
| *296 | 19.8 | 892 | 32,400 | 20.7 | 966 | 36,800 |
| **IMR-4227** | 18.5 | 790 | 22,000 | **21.0** | **1046** | **36,100** |
| *H-4227 | 18.7 | 839 | 29,600 | 20.8 | 985 | 38,600 |

**Note:** Loads shown in shaded panels are maximum.
Loads shown in bold designate potentially most accurate load.
* Designates the use of magnum primers.
\+ Designates a compressed powder charge.

# 44 Remington Magnum

**#429303**
200 gr. (Linotype) 1.692" OAL
**BC:** .105
**SD:** .155

| Powder | Sugg Starting Grains | Velocity fps | Pressure C.U.P. | Max Load Grains | Velocity fps | Pressure C.U.P. |
|---|---|---|---|---|---|---|
| Titegroup | 9.2 | 1107 | 32,600 | 10.2 | 1223 | 38,500 |
| **231** | 9.1 | 913 | 19,600 | **12.6** | **1231** | **36,900** |
| Unique | 11.0 | 1004 | 22,100 | 13.2 | 1265 | 36,700 |
| Herco | 11.4 | 1035 | 24,300 | 13.8 | 1245 | 36,700 |
| SR-4756 | 12.3 | 1043 | 22,600 | 15.5 | 1289 | 36,700 |
| HS-6 | 14.8 | 1086 | 28,900 | 16.5 | 1327 | 38,400 |
| AA#7 | 16.9 | 1065 | 26,200 | 18.8 | 1273 | 37,500 |
| Blue Dot | 15.8 | 1062 | 22,800 | 19.8 | 1363 | 36,800 |
| N110 | 19.8 | 1232 | 30,200 | 22.0+ | 1438 | 39,300 |
| 2400 | 19.0 | 991 | 20,400 | 24.0+ | 1314 | 34,600 |
| *H-110 | 26.6 | 1472 | 36,700 | 27.8+ | 1507 | 37,300 |
| IMR-4227 | 22.0 | 1038 | 22,100 | 24.5+ | 1201 | 29,600 |

**#429215**
210 gr.(Linotype) 1.645" OAL
**BC:** .188
**SD:** .163

| Powder | Sugg Starting Grains | Velocity fps | Pressure C.U.P. | Max Load Grains | Velocity fps | Pressure C.U.P. |
|---|---|---|---|---|---|---|
| Titegroup | 9.0 | 1023 | 30,700 | 10.0 | 1143 | 37,400 |
| **231** | **9.3** | **914** | **21,000** | 12.8 | 1191 | 37,000 |
| Unique | 10.0 | 930 | 21,000 | 13.2 | 1221 | 36,000 |
| Herco | 11.4 | 984 | 22,800 | 13.5 | 1205 | 36,000 |
| SR-4756 | 12.2 | 1036 | 24,900 | 15.2 | 1228 | 36,100 |
| HS-6 | 15.0 | 1105 | 29,700 | 16.7 | 1290 | 37,400 |
| AA#7 | 17.2 | 1094 | 27,500 | 19.2 | 1305 | 37,100 |
| 800X | 12.0 | 932 | 23,900 | 15.1 | 1274 | 36,200 |
| Blue Dot | 14.9 | 1036 | 26,700 | 16.6 | 1324 | 38,500 |
| N110 | 19.3 | 1180 | 21,200 | 21.5 | 1413 | 38,200 |
| 2400 | 19.8 | 1191 | 31,600 | 22.0 | 1348 | 37,100 |
| *H-110 | 26.4 | 1298 | 27,500 | 27.5+ | 1447 | 33,800 |
| *296 | 25.5 | 1340 | 29,500 | 27.0+ | 1508 | 36,400 |
| IMR-4227 | 21.8 | 1017 | 22,100 | 25.5+ | 1227 | 32,800 |

**#429667**
240 gr.(Linotype) 1.645" OAL
**BC:** .149
**SD:** .186

| Powder | Sugg Starting Grains | Velocity fps | Pressure C.U.P. | Max Load Grains | Velocity fps | Pressure C.U.P. |
|---|---|---|---|---|---|---|
| Titegroup | 9.0 | 1003 | 33,900 | 10.0 | 1115 | 39,300 |
| Unique | 10.0 | 937 | 25,300 | 11.7 | 1133 | 37,900 |
| Herco | 10.5 | 958 | 28,400 | 11.7 | 1101 | 37,500 |
| **800X** | 12.0 | 1046 | 30,600 | **13.5** | **1198** | **38,600** |
| Blue Dot | 14.0 | 933 | 24,500 | 15.5 | 1159 | 36,000 |
| AA#9 | 18.2 | 1009 | 25,700 | 20.2 | 1217 | 35,000 |
| N110 | 18.0 | 1064 | 28,700 | 20.0 | 1283 | 37,900 |
| 2400 | 18.5 | 1101 | 34,700 | 20.6 | 1258 | 38,900 |
| *H-110 | 22.5 | 1204 | 31,800 | 23.5 | 1266 | 35,700 |
| IMR-4227 | 21.5 | 1036 | 29,000 | 24.0 | 1263 | 37,800 |
| *H-4227 | 20.7 | 1032 | 27,500 | 23.0 | 1248 | 37,300 |

**#429421**
245 gr.(Linotype) 1.710" OAL
**BC:** .209
**SD:** .190

| Powder | Sugg Starting Grains | Velocity fps | Pressure C.U.P. | Max Load Grains | Velocity fps | Pressure C.U.P. |
|---|---|---|---|---|---|---|
| Titegroup | 8.5 | 915 | 29,400 | 9.5 | 1028 | 37,100 |
| Unique | 9.8 | 912 | 20,800 | 13.0 | 1147 | 36,800 |
| Herco | 10.9 | 918 | 22,900 | 13.1 | 1090 | 34,600 |
| 800X | 10.6 | 812 | 20,700 | 13.3 | 1113 | 34,200 |
| Blue Dot | 14.5 | 1034 | 29,800 | 16.0 | 1194 | 36,600 |
| AA#9 | 17.5 | 711 | 15,100 | 21.7 | 1229 | 37,000 |
| N110 | 18.0 | 1034 | 25,900 | 20.0 | 1300 | 38,800 |
| **2400** | 18.5 | 1087 | 30,300 | **20.6** | **1248** | **37,200** |
| *H-110 | 24.0 | 1218 | 31,900 | 25.0 | 1301 | 35,300 |
| IMR-4227 | 20.2 | 938 | 21,300 | 24.0+ | 1196 | 34,600 |
| *H-4227 | 21.5 | 1083 | 29,400 | 23.8 | 1281 | 38,400 |

**#429244**
255 gr.(Linotype) 1.680" OAL
**BC:** .201
**SD:** .198

| Powder | Sugg Starting Grains | Velocity fps | Pressure C.U.P. | Max Load Grains | Velocity fps | Pressure C.U.P. |
|---|---|---|---|---|---|---|
| Titegroup | 8.1 | 873 | 31,800 | 9.0 | 945 | 37,700 |
| Unique | 8.9 | 805 | 17,500 | 12.1 | 1100 | 36,400 |
| SR-4756 | 10.5 | 892 | 21,500 | 12.2 | 1119 | 35,300 |
| Herco | 11.0 | 927 | 24,500 | 12.4 | 1085 | 35,400 |
| 800X | 10.6 | 842 | 25,300 | 13.2 | 1075 | 36,600 |
| HS-7 | 14.5 | 921 | 22,600 | 17.5 | 1160 | 37,000 |
| Blue Dot | 14.0 | 911 | 20,300 | 17.4 | 1160 | 34,800 |
| AA#9 | 17.5 | 750 | 17,000 | 21.7 | 1223 | 34,600 |
| **2400** | 18.2 | 915 | 21,600 | **22.2** | **1165** | **35,300** |
| *H-110 | 21.8 | 1097 | 31,500 | 22.8 | 1186 | 36,400 |
| *296 | 22.5 | 1150 | 33,400 | 23.5 | 1223 | 37,800 |
| IMR-4227 | 20.2 | 903 | 20,600 | 24.0+ | 1135 | 33,700 |
| *H-4227 | 19.8 | 992 | 29,900 | 22.0 | 1137 | 36,400 |

**#429650**
300 gr.(Linotype) 1.700" OAL
**BC:** .165
**SD:** .233

| Powder | Sugg Starting Grains | Velocity fps | Pressure C.U.P. | Max Load Grains | Velocity fps | Pressure C.U.P. |
|---|---|---|---|---|---|---|
| SR-4756 | 8.5 | 796 | 24,800 | 10.0 | 907 | 34,900 |
| Herco | 8.1 | 793 | 30,100 | 9.0 | 850 | 35,400 |
| 800X | 8.5 | 794 | 23,800 | 10.5 | 948 | 36,000 |
| Blue Dot | 10.5 | 761 | 22,400 | 11.7 | 895 | 33,200 |
| AA#9 | 15.3 | 875 | 25,700 | 18.0 | 1075 | 36,300 |
| N110 | 14.2 | 873 | 24,300 | 16.0 | 1029 | 34,800 |
| **2400** | 14.0 | 857 | 27,600 | **15.7** | **1001** | **37,200** |
| *H-110 | 17.7 | 976 | 34,300 | 18.5 | 1036 | 37,900 |
| *296 | 18.2 | 982 | 34,500 | 19.0 | 1064 | 38,300 |
| IMR-4227 | 16.5 | 837 | 24,000 | 19.0+ | 1008 | 33,600 |
| *H-4227 | 17.0 | 916 | 31,100 | 19.0 | 1036 | 37,900 |

**Note:** Loads shown in shaded panels are maximum.
Loads shown in bold designate potentially most accurate load.
* Designates the use of magnum primers.
\+ Designates a compressed powder charge.

# 45 Automatic (45 ACP)

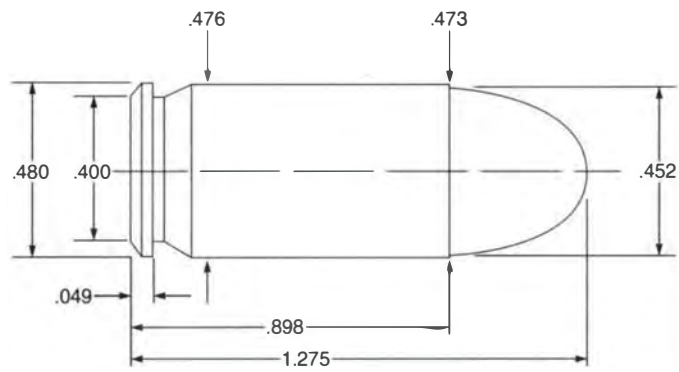


**Comments:**

The 45 ACP (Automatic Colt Pistol) originated in the Colt Model 1905 pistol developed by John Moses Browning. The United States Army sought a 45-caliber pistol to replace the 38 Long Colt that proved semi-disastrous during the Philippine Campaign. John Browning subsequently chambered his masterpiece, the Model 1911 pistol, in 45 ACP and the legend was born. The original military loading consisted of a 200-grain bullet traveling just over 900 feet per second. This soon changed to the now standard 230-grain bullet at 850 feet per second. The Model 1911 and 1911A1 pistol served as the standard U.S. military sidearm for over 70 years. Although officially replaced by the 9mm Beretta in 1985, the 45 ACP cartridge remains in use with Special Operations units. Law enforcement agencies have shown increased interest in the cartridge lately. Several European arms makers are now also producing 45 ACP chambered pistols.

The 45 ACP has long been one of the most accurate and popular pistol cartridges around and shows no sign of slowing down despite its age. It is not however a cartridge that one can shoot once or twice a year and remain proficient with. The wide availability of components and bullet designs make the 45 ACP a great candidate for handloaders. Bullseye, Unique, and 231 often give best results with most bullet weights in this cartridge. The 45 ACP headspaces on the case mouth so cartridges must not be roll crimped. The roll-crimping feature in Lyman seating dies for the 45 ACP is for use with the 45 Auto Rim cartridges used in revolvers. A slight taper crimp can be used on the 45 ACP if necessary. Reloaders should trim cases only if necessary and chamfer the case mouth only enough to break the burr. Shooters should adhere to the listed cartridge overall lengths. Variations in overall lengths may result in excessive pressures or difficulty feeding.

Many 1911 pattern pistols will not function well with anything but round nose bullets unless a qualified gunsmith alters the feed ramp. Cast bullet #452374 has been in the Lyman line since 1924 and is ideal for original, unaltered pistols. This bullet closely duplicates the shape and weight of the original military full metal-jacketed load. Cast bullet #452460 has been a popular semi wad cutter bullet since 1950. Cast bullet #452630 is a bevel-based design. This is a relatively new addition to our line and makes for a good mid-range practice load. Sizing this bullet through a lube-sizer such as our Lyman Model 4500 will often leave a small deposit of bullet lubricant around the bevel. Many shooters simply wipe the base of the bullet on a clean sheet of paper after sizing. Groove diameters can vary from .450" to .453" but the shooter should not size cast bullets larger than .451" due to chamber dimensions.

**Test Components:**

Cases . . . . . .Remington, Federal
Trim-to Length . . . . . ..888"
Primers . . . . . .Remington 2½, CCI 300
Primer Size . . . . . .Large Pistol
Lyman Shell Holder . . . . . .No. 2
Jacketed Bullets Used . .Remington SWC/FMJ, 185 gr.
Hornady HP/XTP #45100, 185 gr.
Speer Gold Dot HP #4478, 200 gr.
Speer JHP #4479, 225 gr.
Speer TMJ #4480, 230 gr.
Cast Bullets Used . . . . . .(sized to .451" dia)
#452460, 200 gr.
#452630, 200 gr.
#452374, 225 gr.

**Test Specifications:**
**(Velocity & Pressure)**

Firearm Used . . . . . .Universal Receiver
Barrel Length . . . . . .5"
Twist . . . . . .1-16"
Groove Dia. . . . . .450"

# 45 Automatic (45 ACP)

**185 gr. Jacketed SWC**
1.135" OAL
**BC:** .068
**SD:** .130

| Powder | Sugg Starting Grains | Velocity fps | Pressure C.U.P. | Max Load Grains | Velocity fps | Pressure C.U.P. |
|---|---|---|---|---|---|---|
| 700X | 3.4 | 675 | 7,900 | 5.0 | 967 | 17,800 |
| **Bullseye** | 3.5 | 678 | 8,000 | **5.6** | **975** | **16,600** |
| 231 | 4.1 | 680 | 9,100 | 6.1 | 981 | 16,600 |
| SR-7625 | 4.4 | 706 | 9,100 | 6.5 | 972 | 16,800 |
| Unique | 4.7 | 661 | 7,700 | 7.5 | 1055 | 18,000 |
| SR-4756 | 5.7 | 666 | 7,900 | 7.7 | 1002 | 17,000 |
| HS-6 | 6.6 | 689 | 8,000 | 9.1 | 1038 | 18,000 |
| Blue Dot | 7.3 | 666 | 8,000 | 10.2 | 1015 | 17,800 |

**200 gr. Jacketed HP**
1.178" OAL
**BC:** .138
**SD:** .140

| Powder | Sugg Starting Grains | Velocity fps | Pressure C.U.P. | Max Load Grains | Velocity fps | Pressure C.U.P. |
|---|---|---|---|---|---|---|
| Clays | 3.9 | 713 | 13,100 | 4.4 | 790 | 16,500 |
| 700X | 3.3 | 597 | 7,400 | 4.9 | 871 | 17,300 |
| **Bullseye** | 3.4 | 604 | 7,100 | **5.7** | **942** | **17,800** |
| 231 | 5.5 | 772 | 11,900 | 6.2 | 897 | 16,700 |
| N320 | 5.1 | 650 | 12,500 | 5.7 | 857 | 16,200 |
| SR-7625 | 4.5 | 601 | 7,300 | 6.7 | 935 | 17,400 |
| Unique | 4.0 | 604 | 7,300 | 6.5 | 927 | 17,700 |
| SR-4756 | 5.4 | 588 | 7,100 | 7.4 | 961 | 18,000 |
| AA#5 | 6.8 | 623 | 9,400 | 8.5 | 900 | 16,800 |
| HS-6 | 5.7 | 566 | 6,500 | 9.0 | 951 | 17,600 |
| Power Pistol | 6.6 | 818 | 12,900 | 7.4 | 935 | 16,600 |
| WSF | 6.5 | 832 | 13,600 | 7.3 | 955 | 17,900 |
| Blue Dot | 8.7 | 747 | 10,400 | 9.7 | 899 | 15,800 |

**230 gr. TMJ**
1.275" OAL
**BC:** .153
**SD:** .162

| Powder | Sugg Starting Grains | Velocity fps | Pressure C.U.P. | Max Load Grains | Velocity fps | Pressure C.U.P. |
|---|---|---|---|---|---|---|
| **700X** | 3.6 | 667 | 11,200 | **4.8** | **867** | **17,900** |
| Bullseye | 3.8 | 662 | 10,400 | 5.3 | 878 | 17,100 |
| SR-7625 | 4.9 | 678 | 10,800 | 5.9 | 838 | 15,800 |
| Unique | 5.9 | 749 | 12,500 | 6.6 | 825 | 15,800 |
| SR-4756 | 6.0 | 695 | 11,200 | 7.0 | 866 | 17,400 |
| N340 | 5.9 | 742 | 12,700 | 6.6 | 838 | 16,500 |
| Power Pistol | 6.4 | 775 | 13,500 | 7.2 | 858 | 16,600 |
| Blue Dot | 8.3 | 684 | 11,000 | 9.2 | 806 | 15,100 |

**185 gr. Jacketed HP**
1.175" OAL
**BC:** .139
**SD:** .130

| Powder | Sugg Starting Grains | Velocity fps | Pressure C.U.P. | Max Load Grains | Velocity fps | Pressure C.U.P. |
|---|---|---|---|---|---|---|
| Clays | 4.1 | 766 | 13,500 | 4.6 | 841 | 16,600 |
| 700X | 3.5 | 612 | 7,500 | 5.5 | 933 | 17,800 |
| Bullseye | 3.5 | 610 | 7,300 | 6.0 | 976 | 18,000 |
| 231 | 4.4 | 640 | 7,500 | 6.1 | 937 | 15,700 |
| **HP-38** | 3.5 | 599 | 7,500 | **5.8** | **960** | **17,900** |
| Red Dot | 3.5 | 607 | 7,200 | 6.1 | 942 | 17,600 |
| N320 | 5.7 | 812 | 10,500 | 6.4 | 988 | 17,300 |
| PB | 4.6 | 660 | 9,100 | 6.9 | 968 | 17,700 |
| SR-7625 | 4.9 | 633 | 7,100 | 7.0 | 960 | 17,900 |
| Unique | 4.8 | 630 | 7,800 | 7.8 | 985 | 17,800 |
| AA#5 | 7.4 | 720 | 10,700 | 9.2 | 1008 | 17,700 |
| Power Pistol | 7.4 | 917 | 13,400 | 8.3 | 1024 | 16,800 |
| WSF | 7.2 | 881 | 12,300 | 8.0 | 1047 | 17,500 |

**225 gr. Jacketed HP**
1.243" OAL
**BC:** .169
**SD:** .158

| Powder | Sugg Starting Grains | Velocity fps | Pressure C.U.P. | Max Load Grains | Velocity fps | Pressure C.U.P. |
|---|---|---|---|---|---|---|
| 700X | 3.1 | 549 | 7,500 | 4.8 | 796 | 17,200 |
| Bullseye | 3.1 | 554 | 7,300 | 5.3 | 840 | 17,400 |
| SR-7625 | 4.4 | 587 | 7,400 | 6.3 | 844 | 17,400 |
| **Unique** | 4.1 | 548 | 6,800 | **6.7** | **883** | **17,500** |
| SR-4756 | 4.8 | 552 | 6,700 | 7.3 | 882 | 17,300 |
| N340 | 6.0 | 689 | 11,700 | 6.7 | 830 | 16,300 |
| Power Pistol | 6.5 | 776 | 14,500 | 7.3 | 876 | 17,100 |
| WSF | 6.0 | 717 | 14,100 | 6.7 | 807 | 16,500 |
| HS-7 | 6.7 | 564 | 6,800 | 10.3 | 884 | 17,600 |

**#452460**
200 gr. (#2 Alloy) 1.161" OAL
**BC:** .076
**SD:** .140

| Powder | Sugg Starting Grains | Velocity fps | Pressure C.U.P. | Max Load Grains | Velocity fps | Pressure C.U.P. |
|---|---|---|---|---|---|---|
| *Titegroup | 4.5 | 813 | 13,800 | 5.1 | 895 | 17,300 |
| 700X | 4.0 | 745 | 10,300 | 5.2 | 940 | 17,300 |
| Bullseye | 3.5 | 645 | 6,900 | 5.6 | 869 | 15,700 |
| Red Dot | 4.0 | 695 | 8,400 | 5.3 | 895 | 14,700 |
| *N320 | 4.6 | 774 | 13,400 | 5.2 | 889 | 17,100 |
| *WST | 4.2 | 750 | 13,300 | 4.7 | 804 | 15,300 |
| Green Dot | 4.5 | 715 | 9,000 | 5.8 | 895 | 14,400 |
| ****231** | 4.0 | 694 | 9,200 | **6.0** | **987** | **18,000** |
| SR-7625 | 5.0 | 735 | 9,000 | 6.2 | 945 | 17,000 |
| Unique | 5.0 | 670 | 7,700 | 7.5 | 980 | 16,600 |
| **SR-4756 | 5.3 | 704 | 9,100 | 7.3 | 993 | 17,000 |
| *Power Pistol | 6.3 | 816 | 13,300 | 7.0 | 919 | 16,800 |
| **AA#5 | 6.4 | 686 | 10,000 | 8.0 | 970 | 17,000 |
| **HS-6 | 6.0 | 690 | 8,600 | 8.7 | 1016 | 17,700 |
| **Blue Dot | 7.1 | 701 | 8,900 | 10.6 | 1012 | 17,200 |

**Note:** Loads shown in shaded panels are maximum.
Loads shown in bold designate potentially most accurate load.
* Designates use of CCI primers.
**Designates use of Federal cases.

**#452630**
200 gr. (#2 Alloy) 1.235" OAL
**BC:** .063
**SD:** .140

| Powder | Sugg Starting Grains | Velocity fps | Pressure C.U.P. | Max Load Grains | Velocity fps | Pressure C.U.P. |
|---|---|---|---|---|---|---|
| Clays | 3.9 | 701 | 10,200 | 4.4 | 839 | 15,500 |
| *Titegroup | 4.8 | 801 | 12,200 | 5.4 | 920 | 17,100 |
| 700X | 4.4 | 676 | 10,000 | 5.5 | 884 | 17,500 |
| **Bullseye** | 4.9 | 840 | 12,900 | **6.0** | **909** | **17,000** |
| Red Dot | 4.4 | 713 | 12,400 | 5.5 | 894 | 17,600 |
| *N320 | 5.1 | 746 | 10,000 | 5.7 | 865 | 14,800 |
| *WST | 4.4 | 735 | 11,100 | 4.9 | 840 | 16,300 |
| Green Dot | 5.1 | 727 | 11,900 | 6.4 | 894 | 16,900 |
| *231 | 5.4 | 769 | 12,700 | 6.1 | 885 | 16,300 |
| SR-7625 | 5.4 | 653 | 8,600 | 6.7 | 900 | 16,800 |
| *WSF | 6.3 | 815 | 12,200 | 7.0 | 904 | 16,600 |
| Unique | 6.0 | 717 | 11,400 | 7.5 | 913 | 17,400 |
| SR-4756 | 6.4 | 660 | 9,300 | 8.0 | 933 | 16,700 |
| *Power Pistol | 6.6 | 810 | 12,700 | 7.4 | 955 | 17,500 |
| AA#5 | 7.0 | 697 | 10,500 | 8.5 | 927 | 16,800 |
| *HS-6 | 8.5 | 795 | 12,800 | 9.5 | 912 | 16,800 |
| Blue Dot | 8.5 | 679 | 9,800 | 10.6 | 972 | 17,300 |

**#452374**
225 gr. (#2 Alloy) 1.272" OAL
**BC:** .158
**SD:** .158

| Powder | Sugg Starting Grains | Velocity fps | Pressure C.U.P. | Max Load Grains | Velocity fps | Pressure C.U.P. |
|---|---|---|---|---|---|---|
| **Clays | 3.6 | 683 | 10,600 | 4.3 | 818 | 17,100 |
| *Titegroup | 4.5 | 735 | 11,200 | 5.1 | 841 | 16,100 |
| 700X | 4.0 | 695 | 10,500 | 5.0 | 855 | 17,300 |
| Bullseye | 4.0 | 680 | 10,100 | 5.0 | 815 | 14,400 |
| Red Dot | 4.3 | 705 | 11,100 | 5.3 | 835 | 15,300 |
| *WST | 4.2 | 707 | 11,500 | 4.7 | 794 | 17,100 |
| Green Dot | 4.8 | 725 | 11,400 | 5.8 | 845 | 15,100 |
| ****231** | 4.0 | 661 | 9,200 | **5.8** | **902** | **17,500** |
| SR-7625 | 5.0 | 675 | 9,000 | 6.0 | 850 | 15,200 |
| *WSF | 6.0 | 749 | 12,300 | 6.7 | 839 | 15,100 |
| *N340 | 5.9 | 730 | 10,300 | 6.6 | 864 | 16,300 |
| Unique | 5.5 | 695 | 10,100 | 7.3 | 905 | 16,500 |
| SR-4756 | 5.5 | 662 | 8,800 | 7.5 | 955 | 18,000 |
| *Power Pistol | 6.3 | 764 | 11,900 | 7.0 | 865 | 16,300 |
| **AA#5 | 6.6 | 625 | 9,200 | 8.2 | 874 | 17,300 |
| **HS-6 | 6.2 | 664 | 8,400 | 8.6 | 921 | 16,600 |
| **Blue Dot | 7.5 | 660 | 8,600 | 10.7 | 964 | 17,300 |

**Note:** Loads shown in shaded panels are maximum.
Loads shown in bold designate potentially most accurate load.
* Designates use of CCI primers.
**Designates use of Federal cases.

# 45 Auto Rim

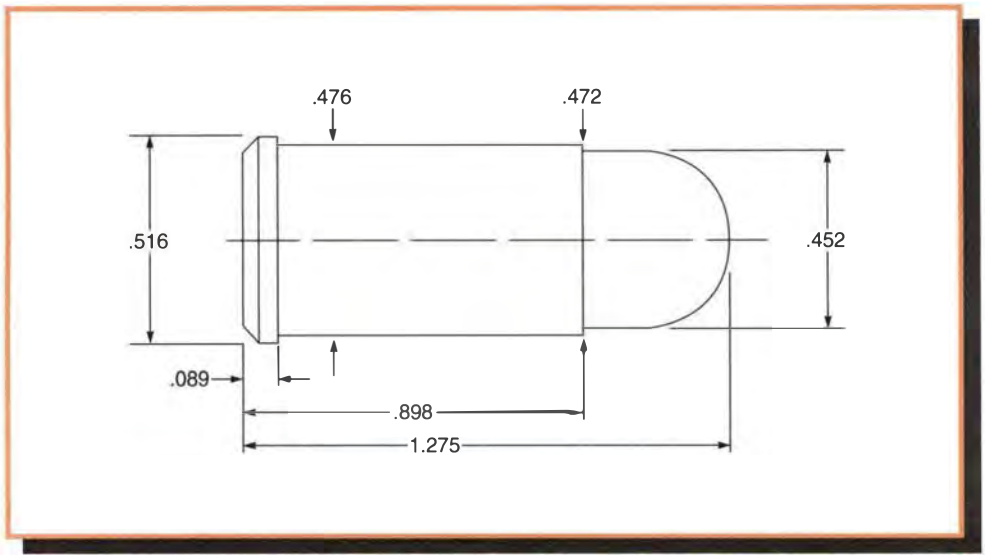


**Comments:**

The 45 Auto Rim was designed for use in revolvers that were chambered for the 45 Automatic. The 45 Auto Rim cartridge did away with the need to use the cumbersome half moon clips in such revolvers. The rim of this case both headspaced the round and afforded a purchase for the revolvers extractor. Bullseye, 231 or Unique should give the best results.

**Test Components:**

Cases . . . . . .Remington
Trim-to Length . . . . . .888"
Primers . . . . . .Remington 2½
Primer Size . . . . . .Large Pistol
Lyman Shell Holder . . . . . .No. 14A
Jacketed Bullets Used...Hornady HP/XTP #45100, 185 gr.
Speer GDHP #4478, 200 gr.
Speer JHP #4479, 225 gr.
Cast Bullets Used . . . . . .(sized to .451" dia)
#452460, 200 gr.
#452374, 225 gr.

**Test Specifications:**
**(Velocity & Pressure)**

Firearm Used . . . . . .Universal Receiver
Smith & Wesson Model 25
Barrel Length . . . . . .Universal Receiver 4½"
Model 25; 6½"
Twist . . . . . .1-16"
Groove Dia. . . . . .451"

**185 gr. Jacketed HP**
1.236" OAL
**BC:** .139
**SD:** .130

| Powder | Sugg Starting Grains | Velocity fps | Pressure C.U.P. | Max Load Grains | Velocity fps | Pressure C.U.P. |
|---|---|---|---|---|---|---|
| 700X | 4.5 | 713 | 8,200 | 5.2 | 838 | 11,900 |
| SR-7625 | 6.0 | 709 | 7,500 | 7.2 | 849 | 13,700 |
| Bullseye | 4.6 | 722 | 8,600 | 5.8 | 915 | 14,800 |
| **Red Dot** | 4.8 | 711 | 8,600 | **6.4** | **933** | **14,700** |
| Unique | 5.0 | 585 | 5,100 | 7.6 | 905 | 13,200 |
| 231 | 4.4 | 618 | 6,400 | 6.1 | 889 | 13,700 |

**200 gr. Jacketed HP**
1.180" OAL
**BC:** .138
**SD:** .140

| Powder | Sugg Starting Grains | Velocity fps | Pressure C.U.P. | Max Load Grains | Velocity fps | Pressure C.U.P. |
|---|---|---|---|---|---|---|
| 700X | 3.4 | 491 | 5,000 | 4.9 | 799 | 13,400 |
| SR-7625 | 4.8 | 608 | 7,200 | 6.0 | 809 | 12,400 |
| Bullseye | 4.0 | 614 | 7,800 | 5.4 | 838 | 13,700 |
| Red Dot | 4.0 | 615 | 7,700 | 5.4 | 852 | 14,600 |
| Unique | 5.8 | 719 | 10,100 | 7.1 | 882 | 14,500 |
| **231** | 4.0 | 570 | 7,800 | **5.7** | **852** | **14,800** |
| HS-6 | 6.1 | 558 | 6,400 | 8.7 | 846 | 13,600 |

**Note:** Loads shown in shaded panels are maximum.
Loads shown in bold designate potentially most accurate load.

# 45 Auto Rim

**225 gr. Jacketed HP**
1.255" OAL
**BC:** .169
**SD:** .158

| Powder | Sugg Starting Grains | Velocity fps | Pressure C.U.P. | Max Load Grains | Velocity fps | Pressure C.U.P. |
|---|---|---|---|---|---|---|
| SR-7625 | 4.4 | 518 | 6,100 | 6.2 | 812 | 14,900 |
| Unique | 5.0 | 609 | 8,200 | 7.0 | 834 | 14,500 |
| Blue Dot | 8.5 | 718 | 10,200 | 10.0 | 864 | 14,500 |
| **231** | 3.7 | 496 | 6,500 | **5.2** | **773** | **13,800** |
| HS-6 | 6.7 | 634 | 8,800 | 8.3 | 812 | 13,600 |

**#452460**
200 gr. (#2 Alloy) 1.161" OAL
**BC:** .076
**SD:** .140

| Powder | Sugg Starting Grains | Velocity fps | Pressure C.U.P. | Max Load Grains | Velocity fps | Pressure C.U.P. |
|---|---|---|---|---|---|---|
| 700X | 4.0 | 675 | — | 5.0 | 875 | — |
| PB | 4.5 | 650 | — | 5.5 | 840 | — |
| SR-7625 | 5.0 | 660 | — | 6.1 | 850 | — |
| **Bullseye** | 3.0 | 510 | — | **4.7** | **775** | — |
| Red Dot | 4.0 | 645 | — | 5.2 | 845 | — |
| Green Dot | 4.5 | 660 | — | 5.6 | 840 | — |
| Unique | 5.0 | 610 | — | 6.8 | 845 | — |
| 231 | 4.0 | 694 | 7,200 | 5.5 | 936 | 14,100 |

**#452374**
225 gr. (#2 Alloy) 1.265" OAL
**BC:** .158
**SD:** .158

| Powder | Sugg Starting Grains | Velocity fps | Pressure C.U.P. | Max Load Grains | Velocity fps | Pressure C.U.P. |
|---|---|---|---|---|---|---|
| 700X | 4.0 | 625 | — | 4.8 | 770 | — |
| PB | 4.5 | 565 | — | 5.4 | 735 | — |
| SR-7625 | 5.0 | 560 | — | 5.9 | 750 | — |
| Bullseye | 3.0 | 475 | — | 4.5 | 690 | — |
| Red Dot | 4.0 | 625 | — | 5.0 | 760 | — |
| Green Dot | 4.5 | 615 | — | 5.4 | 750 | — |
| Unique | 5.0 | 550 | — | 6.6 | 785 | — |
| **231** | 4.0 | 660 | 6,900 | **5.5** | **873** | **13,800** |
| HS-6 | 7.3 | 799 | 9,400 | 8.6 | 922 | 13,800 |

**Note:** Loads shown in shaded panels are maximum.
Loads shown in bold designate potentially most accurate load.

# 45 Colt

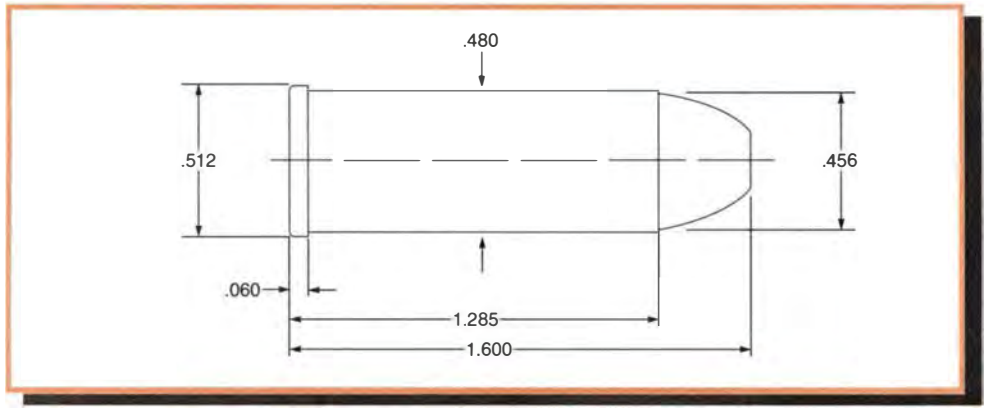


**Comments:**

The year 1873 was a milestone in development of metallic cartridges. 1873 marked the introduction of the 44-40 (44 WCF), the 45-70 Government, and the 45 Colt. All three cartridges are still going strong 130 years after their debut. Widespread use in Cowboy Action shooting is also contributing to their current popularity. Colt introduced their 45 cartridge in the famed Model 1873 Single Action Army. The original loading propelled a 255-grain lead bullet with 40-grains of black powder around 900 feet per second. The 45 Colt is also known—mistakenly—as the 45 Long Colt. In contrast to several other offerings from Colt, i.e. 32 Short/Long, 38 Short/Long, 41 Short/Long, there never was a 45 Short Colt.

Several caveats apply when reloading the 45 Colt. Shooters must pay particular attention in regard to the cartridge's small diameter rim. This rim provides less bearing surface to the shell holder in comparison to other cartridges and tears easily if undue force is applied during the reloading process. The grooves of Pre-World War II revolvers normally measure .454" in diameter. Later production revolvers and lever action rifles are built with .451" diameter grooves. Those loading for older revolvers with the original .454" groove should stick with cast bullet #454190. This is our original bullet for the 45 Colt and dates to the nineteenth century. If in doubt, slug the bore. Cast bullet #452424 is an Elmer Keith design and has long been an accurate performer. Bullet #452664 is designed for Cowboy Action shooters. It will function through lever action rifles and produced excellent accuracy with Hodgdon's Titegroup. Unique and 231 are both long time favorites for loading the 45 Colt.

**Test Components:**

Cases . . . . . .Winchester
Trim-to Length . . . . . .1.275"
Primers . . . . . .Winchester WLP
Primer Size . . . . . .Large Pistol
Lyman Shell Holder . . . . . .No. 11
Jacketed Bullets Used . . . . .Sierra JHP #8800, 185 gr.
Speer GDHP #4478, 200 gr.
Speer JHP #4479, 225 gr.
Sierra JHC #8820, 240 gr.
Hornady HP/XTP #45200, 250 gr.
Cast Bullets Used . . . . . .(sized to .452" dia)
#454190, 250 gr.
#452664, 250 gr.
#452424, 255 gr.

**Test Specifications:**
**(Velocity Only)**

Firearm Used . . . . . .Ruger Blackhawk
Barrel Length . . . . . .7½"
Twist . . . . . .1-16"
Groove Dia. . . . . .451"

**185 gr. Jacketed HP** — 1.520" OAL — **BC:** .110 **SD:** .130

| Powder | Sugg Starting Grains | Velocity fps | Pressure C.U.P. | Max Load Grains | Velocity fps | Pressure C.U.P. |
|---|---|---|---|---|---|---|
| 700X | 6.0 | 658 | — | 7.0 | 884 | — |
| N320 | 8.3 | 873 | — | 9.3 | 1123 | — |
| 231 | 7.6 | 866 | — | 8.5 | 1006 | — |
| **Unique** | 7.5 | 615 | — | **10.0** | **934** | — |
| AA#5 | 10.8 | 876 | — | 12.0 | 946 | — |
| Blue Dot | 12.0 | 692 | — | 13.5 | 826 | — |
| HS-7 | 13.0 | 700 | — | 14.5 | 908 | — |
| IMR-4227 | 16.5 | 711 | — | 20.0 | 875 | — |
| XMP-5744 | 18.4 | 842 | — | 20.5 | 978 | — |

**200 gr. Jacketed HP** — 1.557" OAL — **BC:** .138 **SD:** .140

| Powder | Sugg Starting Grains | Velocity fps | Pressure C.U.P. | Max Load Grains | Velocity fps | Pressure C.U.P. |
|---|---|---|---|---|---|---|
| N320 | 7.7 | 843 | — | 8.6 | 1031 | — |
| **Unique** | **8.5** | **847** | — | 9.5 | 934 | — |
| SR-7625 | 7.0 | 581 | — | 9.5 | 894 | — |
| AA#5 | 10.3 | 820 | — | 11.5 | 913 | — |
| SR-4756 | 9.5 | 679 | — | 11.8 | 950 | — |
| HS-6 | 10.3 | 740 | — | 13.3 | 993 | — |
| Blue Dot | 11.6 | 560 | — | 12.8 | 835 | — |

**Note:** Loads shown in shaded panels are maximum.
Loads shown in bold designate potentially most accurate load.

### 225 gr. Jacketed HP
1.575" OAL

BC: .169
SD: .158

| Powder | Sugg Starting Grains | Velocity fps | Pressure C.U.P. | Max Load Grains | Velocity fps | Pressure C.U.P. |
|---|---|---|---|---|---|---|
| N320 | 7.2 | 764 | — | 8.0 | 862 | — |
| 231 | 7.4 | 780 | — | 8.3 | 954 | — |
| Unique | 8.0 | 772 | — | 9.0 | 969 | — |
| SR-7625 | 8.4 | 777 | — | 9.3 | 899 | — |
| **Power Pistol** | **8.5** | **837** | — | 9.5 | 974 | — |
| N340 | 9.0 | 901 | — | 10.0 | 1078 | — |
| AA#5 | 10.0 | 787 | — | 11.2 | 908 | — |
| HS-6 | 10.7 | 737 | — | 11.9 | 874 | — |
| Blue Dot | 11.7 | 756 | — | 13.0 | 888 | — |

### 240 gr. Jacketed HC
1.575" OAL

BC: .170
SD: .168

| Powder | Sugg Starting Grains | Velocity fps | Pressure C.U.P. | Max Load Grains | Velocity fps | Pressure C.U.P. |
|---|---|---|---|---|---|---|
| Unique | 8.0 | 827 | — | 8.8 | 917 | — |
| **Power Pistol** | **8.2** | **861** | — | 9.2 | 957 | — |
| N340 | 8.8 | 870 | — | 9.8 | 982 | — |
| AA#5 | 9.3 | 771 | — | 10.4 | 895 | — |
| HS-6 | 10.0 | 705 | — | 11.0 | 875 | — |
| 2400 | 15.0 | 765 | — | 17.0 | 997 | — |
| XMP-5744 | 16.5 | 790 | — | 18.5 | 873 | — |

### 250 gr. Jacketed HP
1.590" OAL

BC: .146
SD: .175

| Powder | Sugg Starting Grains | Velocity fps | Pressure C.U.P. | Max Load Grains | Velocity fps | Pressure C.U.P. |
|---|---|---|---|---|---|---|
| Titegroup | 5.6 | 653 | — | 6.3 | 803 | — |
| 231 | 6.5 | 681 | — | 7.3 | 813 | — |
| Unique | 7.8 | 755 | — | 8.7 | 877 | — |
| Power Pistol | 8.0 | 754 | — | 9.0 | 893 | — |
| N340 | 8.5 | 850 | — | 9.6 | 969 | — |
| **AA#5** | **10.0** | **777** | — | 11.0 | 925 | — |
| 2400 | 14.8 | 755 | — | 16.5 | 904 | — |
| SR-4759 | 15.5 | 742 | — | 17.5 | 940 | — |
| XMP-5744 | 16.0 | 725 | — | 18.0 | 822 | — |

### #454190
250 gr. (#2 Alloy) 1.600" OAL

BC: .269
SD: .175

| Powder | Sugg Starting Grains | Velocity fps | Pressure C.U.P. | Max Load Grains | Velocity fps | Pressure C.U.P. |
|---|---|---|---|---|---|---|
| 700X | 4.5 | 535 | — | 6.0 | 800 | — |
| Titegroup | 5.6 | 803 | — | 6.2 | 876 | — |
| Red Dot | 4.5 | 535 | — | 6.5 | 835 | — |
| N320 | 6.0 | 685 | — | 6.8 | 822 | — |
| Green Dot | 4.5 | 505 | — | 7.0 | 835 | — |
| 231 | 6.5 | 789 | — | 7.4 | 894 | — |
| PB | 5.0 | 545 | — | 7.5 | 820 | — |
| SR-7625 | 6.0 | 555 | — | 8.5 | 890 | — |
| **Unique** | 6.0 | 595 | — | **9.0** | **875** | — |
| AA#5 | 9.5 | 703 | — | 10.5 | 885 | — |
| HS-6 | 9.5 | 748 | — | 10.5 | 851 | — |

### #452664
250 gr. (#2 Alloy) 1.570" OAL

BC: .150
SD: .175

| Powder | Sugg Starting Grains | Velocity fps | Pressure C.U.P. | Max Load Grains | Velocity fps | Pressure C.U.P. |
|---|---|---|---|---|---|---|
| 700X | 5.4 | 744 | — | 6.0 | 809 | — |
| **Titegroup** | **5.6** | **814** | — | 6.2 | 881 | — |
| Red Dot | 5.8 | 752 | — | 6.5 | 836 | — |
| N320 | 6.0 | 754 | — | 6.8 | 833 | — |
| Green Dot | 6.3 | 750 | — | 7.0 | 837 | — |
| 231 | 6.5 | 796 | — | 7.4 | 902 | — |
| PB | 6.7 | 730 | — | 7.5 | 822 | — |
| SR-7625 | 7.0 | 721 | — | 8.5 | 897 | — |
| Unique | 6.3 | 754 | — | 8.2 | 931 | — |
| AA#5 | 9.5 | 803 | — | 10.5 | 886 | — |
| HS-6 | 8.5 | 640 | — | 10.5 | 859 | — |

### #452424
255 gr. (#2 Alloy) 1.575" OAL

BC: .210
SD: .178

| Powder | Sugg Starting Grains | Velocity fps | Pressure C.U.P. | Max Load Grains | Velocity fps | Pressure C.U.P. |
|---|---|---|---|---|---|---|
| 700X | 4.5 | 535 | — | 6.0 | 785 | — |
| Titegroup | 5.6 | 816 | — | 6.2 | 896 | — |
| Red Dot | 4.5 | 550 | — | 6.0 | 780 | — |
| N320 | 5.8 | 692 | — | 6.7 | 841 | — |
| Green Dot | 4.5 | 500 | — | 6.5 | 765 | — |
| 231 | 6.5 | 797 | — | 7.2 | 879 | — |
| PB | 5.0 | 530 | — | 7.0 | 750 | — |
| SR-7625 | 6.0 | 555 | — | 8.0 | 835 | — |
| **Unique** | **6.0** | **590** | — | 8.5 | 845 | — |
| AA#5 | 9.3 | 737 | — | 10.4 | 845 | — |
| HS-6 | 8.8 | 676 | — | 10.3 | 838 | — |

**Note:** Loads shown in shaded panels are maximum.
Loads shown in bold designate potentially most accurate load.

# 454 Casull

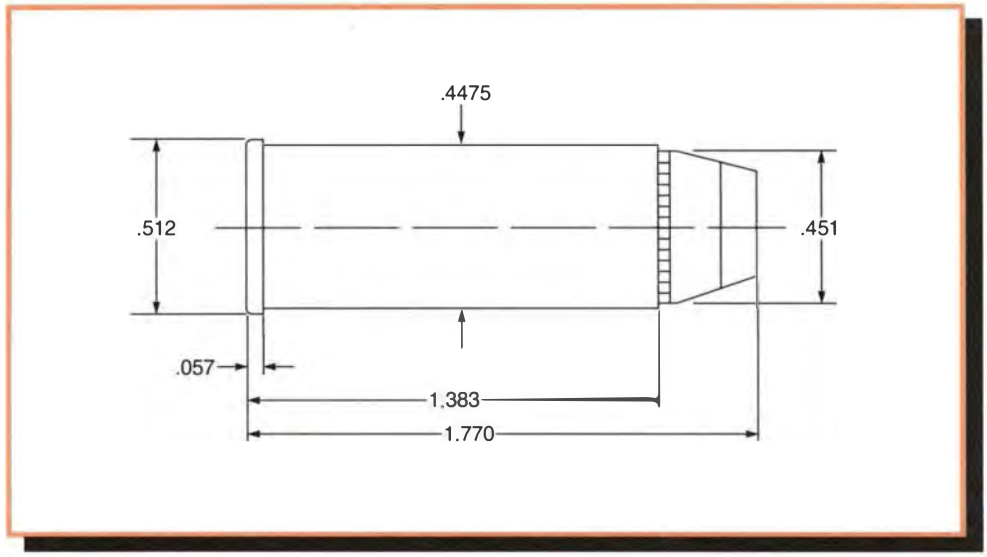


**Comments:**

The 454 Casull is a very powerful cartridge designed by Dick Casull for handgun hunting. in fact, it is one of, if not the most, powerful production built revolver/cartridge combinations available. The 454 Casull is based on a lengthened and thickened 45 Colt case. It uses small rifle primers, preferably magnum primers, to ignite the heavy charges of slow-burning powder.

The loads shown in this manual should only be used in Casull cases and fired in Casull pistols.

Cast bullets should be cast in linotype or a similar strength alloy and sized to .451". Larger bullets will not allow the cartridge to be used due to the tight tolerances found in the chambers.

IMR-4227 and AA1680 will give very good results with this cartridge.

**Test Components:**

Cases . . . . . .Freedom Arms
Trim-to Length . . . . . .1.378"
Primers . . . . . .CCI 450
Primer Size . . . . . .Small Rifle, Magnum
Lyman Shell Holder . . . . . .No. 11
Jacketed Bullets Used . . . . . .Speer HP #4479, 225 gr.
Hornady HP/XTP #45200, 250 gr.
Hornady HP/XTP #45230, 300 gr.
Cast Bullets Used . . . . . .(sized to .451" dia)
*gas check bullet *#452490, 255 gr.
*#452651, 325 gr.

**Test Specifications:**
**(Velocity & Pressure)**

Firearm Used . . . . . .Universal Receiver
Barrel Length . . . . . .7½"
Twist . . . . . .1-24"
Groove Dia. . . . . .451"

**225 gr. Jacketed HP** — 1.690" OAL — **BC:** .169 **SD:** .158

| Powder | Sugg Starting Grains | Velocity fps | Pressure C.U.P. | Max Load Grains | Velocity fps | Pressure C.U.P. |
|---|---|---|---|---|---|---|
| Unique | 12.7 | 1348 | 20,100 | 15.2 | 1513 | 33,900 |
| 2400 | 25.7 | 1602 | 34,200 | 29.5 | 1877 | 31,900 |
| AA#9 | 27.0 | 1634 | 25,500 | 31.0 | 1890 | 37,700 |
| **IMR-4227** | 29.7 | 1550 | 25,300 | **33.5+** | **1823** | **42,000** |

**250 gr. Jacketed HP** — 1.690" OAL — **BC:** .146 **SD:** .175

| Powder | Sugg Starting Grains | Velocity fps | Pressure C.U.P. | Max Load Grains | Velocity fps | Pressure C.U.P. |
|---|---|---|---|---|---|---|
| Unique | 11.8 | 1260 | 22,500 | 13.5 | 1420 | 37,100 |
| 2400 | 21.8 | 1490 | 28,500 | 26.5 | 1709 | 40,400 |
| AA#9 | 24.6 | 1523 | 26,800 | 29.0 | 1769 | 39,900 |
| **IMR-4227** | 26.2 | 1381 | 23,300 | **30.5+** | **1666** | **39,800** |

**Note:** Loads shown in shaded panels are maximum.
Loads shown in bold designate potentially most accurate load.
\+ Designates a compressed powder charge.

**300 gr. Jacketed HP**
1.760" OAL
**BC:** .180
**SD:** .210

| Powder | Sugg Starting Grains | Velocity fps | Pressure C.U.P. | Max Load Grains | Velocity fps | Pressure C.U.P. |
|---|---|---|---|---|---|---|
| Unique | 10.5 | 1049 | 19,300 | 13.0 | 1267 | 34,900 |
| 2400 | 20.0 | 1146 | 23,000 | 24.5 | 1384 | 39,800 |
| AA#9 | 22.0 | 1325 | 23,300 | 25.8 | 1556 | 37,000 |
| **IMR-4227** | 24.2 | 1275 | 25,000 | **28.2** | **1530** | **41,300** |

**#452490**
255 gr. (Linotype) 1.760" OAL
**BC:** .160
**SD:** .179

| Powder | Sugg Starting Grains | Velocity fps | Pressure C.U.P. | Max Load Grains | Velocity fps | Pressure C.U.P. |
|---|---|---|---|---|---|---|
| Bullseye | 9.7 | 1176 | 20,500 | 13.0 | 1395 | 38,000 |
| Unique | 11.6 | 1237 | 20,000 | 14.2 | 1424 | 36,400 |
| 2400 | 21.7 | 1441 | 25,300 | 27.0 | 1747 | 41,700 |
| AA#9 | 24.4 | 1547 | 28,500 | 28.0 | 1723 | 38,100 |
| **IMR-4227** | 25.8 | 1393 | 23,700 | **30.0** | **1663** | **40,200** |

**#452651**
325 gr. (Linotype) 1.755" OAL
**BC:** .191
**SD:** .228

| Powder | Sugg Starting Grains | Velocity fps | Pressure C.U.P. | Max Load Grains | Velocity fps | Pressure C.U.P. |
|---|---|---|---|---|---|---|
| Unique | 9.5 | 1015 | 23,400 | 11.5 | 1161 | 35,800 |
| 2400 | 17.0 | 1161 | 22,500 | 20.0 | 1354 | 34,800 |
| AA#9 | 18.5 | 1166 | 20,500 | 22.0 | 1378 | 36,800 |
| IMR-4227 | 20.0 | 1084 | 22,200 | 24.0 | 1334 | 38,600 |
| **AA-1680** | 24.0 | 1092 | 19,800 | **28.0** | **1324** | **37,400** |

**Note:** Loads shown in shaded panels are maximum.
Loads shown in bold designate potentially most accurate load.

# 480 Ruger

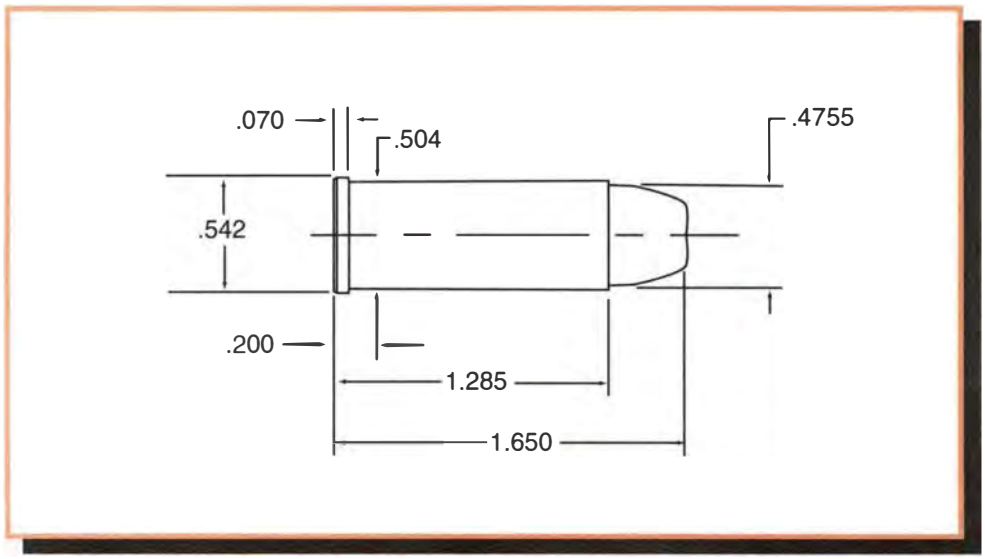


**Comments:**

The 480 Ruger is the result of a joint effort between Hornady and Sturm, Ruger & Co, to develop a cartridge filling the ballistic niche between the 44 Remington Magnum and the 475 Linebaugh. Like the Linebaugh, the 480 case is also based on the 45-70 featuring a smaller rim. Case length of the 480 measures .120" shorter than the Linebaugh and is best described as a "Special" version of the 475 much like the 44 Special's relationship to the 44 Magnum or the 38 Special to the 357. The 480s lower maximum average pressure of 48,000 PSI also allow revolvers to chamber six rounds, instead of the five normally found with the higher 55,000 PSI pressure level of the 475. Loading for the big Ruger is no different than other straight-walled pistol cartridges. Not surprisingly, the cartridge worked best with the slower pistol powders one would normally associate with magnum pistol cartridges. The Lyman technical staff test-fired a Ruger Super Redhawk and none found it particularly unpleasant to shoot. Its 9 1/2 inch barrel and 3 lb. 10 oz weight no doubt contributed to its shooting characteristics.

**Test Components:**

Cases . . . . . .Hornady
Trim-to Length . . . . . .1.275"
Primers . . . . . .Winchester WLP
Primer Size . . . . . .Large Pistol
Lyman Shell Holder . . . . . .No. 17
Jacketed Bullets Used . . . . . .
Hornady HP/XTP #47500, 325 gr.
Hornady HP/XTP #47550, 400 gr.

**Test Specifications:**
**(Velocity & Pressure)**

Firearm Used . . . . . .Universal Receiver
Barrel Length . . . . . .7½"
Twist . . . . . .1-18"
Groove Dia. . . . . .475"

**325 gr. Jacketed HP** — 1.620" OAL — **BC:** .149 **SD:** .206

| Powder | Sugg Starting Grains | Velocity fps | Pressure P.S.I. | Max Load Grains | Velocity fps | Pressure P.S.I. |
|---|---|---|---|---|---|---|
| 2400 | 20.5 | 1269 | 35,800 | 23.1 | 1432 | 46,200 |
| N110 | 21.0 | 1321 | 35,600 | 23.7 | 1434 | 47,200 |
| AA#9 | 22.0 | 1350 | 36,600 | 24.5 | 1500 | 45,900 |
| H110 | 26.1 | 1448 | 40,500 | 27.0 | 1506 | 44,300 |
| 296 | 27.1 | 1503 | 43,900 | 28.0 | 1550 | 46,800 |
| IMR-4227 | 24.0 | 1216 | 35,000 | 26.8 | 1378 | 46,200 |
| **H-4227** | 24.5 | 1312 | 37,100 | **27.2** | **1453** | **46,100** |
| Lil'Gun | 23.0 | 1388 | 38,800 | 25.3 | 1510 | 45,800 |

**400 gr. Jacketed HP** — 1.620" OAL — **BC:** .182 **SD:** .253

| Powder | Sugg Starting Grains | Velocity fps | Pressure P.S.I. | Max Load Grains | Velocity fps | Pressure P.S.I. |
|---|---|---|---|---|---|---|
| 2400 | 15.5 | 1036 | 36,200 | 17.5 | 1175 | 46,400 |
| N110 | 16.5 | 1072 | 33,900 | 18.3 | 1184 | 45,600 |
| **AA#9** | 17.3 | 1147 | 34,800 | **19.3** | **1247** | **46,700** |
| H110 | 20.1 | 1204 | 40,500 | 20.8 | 1255 | 44,900 |
| 296 | 20.8 | 1211 | 40,500 | 21.5 | 1261 | 45,700 |
| IMR-4227 | 19.0 | 1005 | 37,900 | 21.0 | 1142 | 46,800 |
| H-4227 | 19.0 | 1070 | 36,500 | 21.0 | 1186 | 44,400 |
| AA1680 | 21.5 | 937 | 34,600 | 24.0+ | 1045 | 43,000 |

**Note:** Loads shown in shaded panels are maximum.
Loads shown in bold designate potentially most accurate load.
\+ Designates a compressed powder charge.

# 50 Action Express (50 AE)

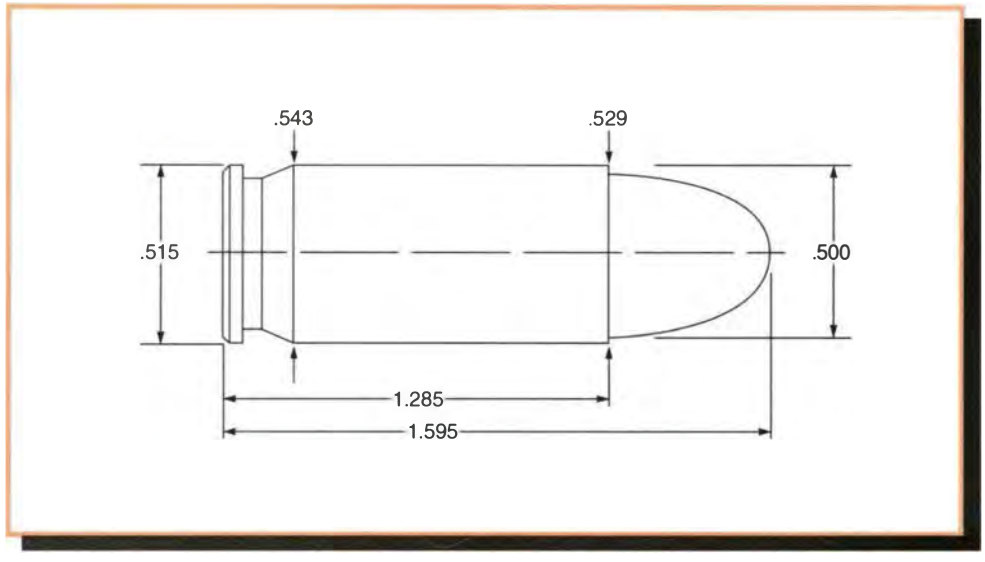


**Comments:**

The 50 Action Express is a very powerful cartridge designed to be fired in the semi-automatic Desert Eagle pistol. The 50 AE case uses a rebated rim of the same diameter as the 44 Magnum, and has a tapered body. The 50 AE fires 325 gr. .500" diameter bullets at nearly 1400 fps, making this an excellent hunting handgun.

Recoil is heavy, but due to the weight of the handgun and its gas-operating system, recoil is controllable.

Slow-burning powders are required to generate enough gas volume to properly cycle the gas-operated action. H110, IMR-4227 and AA1680 all gave us very consistent results during our testing.

**Test Components:**

Cases . . . . . .Speer
Trim-to Length . . . . . .1.280"
Primers . . . . . .CCI 350
Primer Size . . . . . .Large Pistol, Magnum
Lyman Shell Holder . . . . . .No. 7
Jacketed Bullets Used . . . . . .S eer HP #4495, 325 gr.

**Test Specifications:**
**(Velocity Only)**

Firearm Used . . . . . .Desert Eagle
Barrel Length . . . . . .6"
Twist . . . . . .1-19"
Groove Dia. . . . . .501"

**325 gr. Jacketed HP**
1.575" OAL
**BC:** .149
**SD:** .186

| Powder | Sugg Starting Grains | Velocity fps | Pressure | Max Load Grains | Velocity fps | Pressure |
|---|---|---|---|---|---|---|
| 2400 | 22.0 | 1037 | — | 23.4 | 1202 | — |
| AA#9 | 22.5 | 967 | — | 23.8 | 1077 | — |
| **IMR-4227** | 29.5 | 1223 | — | **31.0** | **1323** | — |
| H-110 | 31.2 | 1300 | — | 32.5 | 1372 | — |
| AA-1680 | 34.0 | 1092 | — | 37.5+ | 1289 | — |

**Note:** Loads shown in shaded panels are maximum.
Loads shown in bold designate potentially most accurate load.
+ Designates a compressed powder charge.

# T/C Contender & Encore

## Thompson/Center Contender and Encore Data

## Introduction

This data was developed for use in the T/C Contender and Encore handguns. It can also be used in other single shot or bolt-action handguns such as the Remington XP-100 and Savage Striker. Do not use these loads in any other type of handgun.

Single shot and/or bolt-action handguns have become extremely popular with handgun hunters and silhouette shooters. They are available in a wide variety of calibers, many of which are best known as rifle cartridges. These range from the 22 Hornet up to the 45-70 Government. We have included reduced loads for several of the cartridges listed if a lower velocity and recoil load is desired.

Maximum overall lengths as suggested by SAAMI can be exceeded in the Contender or Encore. We recommend using the exact cartridge overall length shown for each specific bullet in this data section.

The data in this section cannot be used without a full understanding of what it represents or without complete reloading knowledge. Any attempts to use this data without the necessary cautions, procedures and background knowledge could be extremely dangerous, causing personal and property injury, even death.

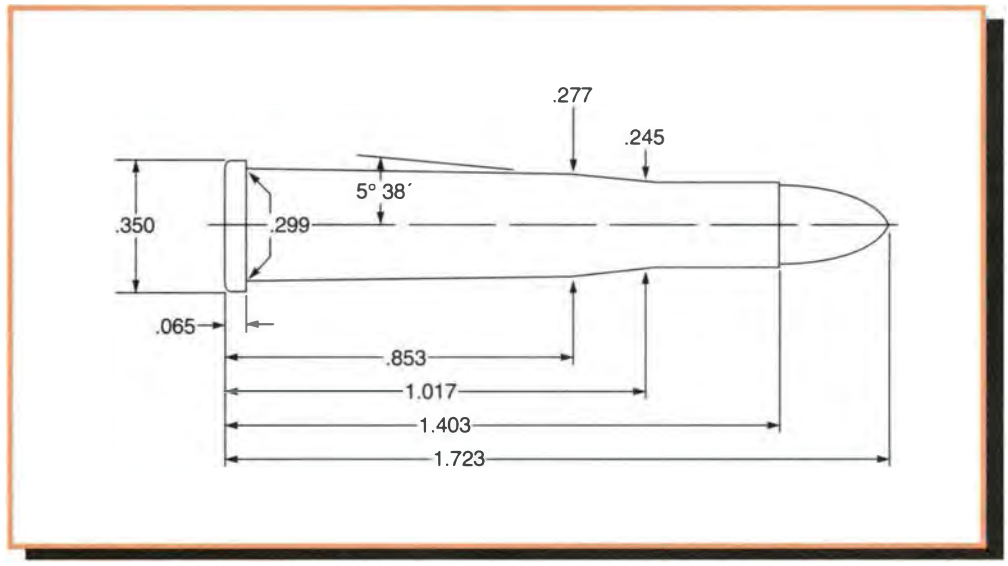


**Comments:**

The Hornet ia a fine short range varmint cartridge for the Contender and noise level is kept to a minimum. Trajectory is quite flat for 100 yard shooting.

IMR 4227 is the first choice for accuracy. Do not forget to use thin jacketed bullets expressly designed for the Hornet.

**Test Components:**

Cases . . . . . .Winchester
Trim-to Length . . . . . .1.393"
Primers . . . . . .Winchester WSR
Primer Size . . . . . .Small Rifle
Lyman Shell Holder . . . . . .No. 4
Jacketed Bullets Used . . . . . .Sierra JSP #1200, 40 gr.
Hornady JSP #2230, 45 gr.
Hornady V-Max #22261, 50 gr.
Hornady A-Max #22492, 52 gr.
Cast Bullets Used . . . . . .(sized to .224" dia)
*gas check bullet *#225438, 44 gr.
*#225415, 55 gr.

**Test Specifications:**
**(Velocity Only)**

Firearm Used . . . . . .Thompson/Center Contender
Barrel Length . . . . . .10"
Twist . . . . . .1-14"
Groove Dia. . . . . .224"

**40 gr. Jacketed SP**
1.722" OAL
**BC:** .122
**SD:** .114

| Powder | Sugg Starting Grains | Velocity fps | Pressure | Max Load Grains | Velocity fps | Pressure |
|---|---|---|---|---|---|---|
| 2400 | 7.2 | 1953 | — | 8.0 | 2150 | — |
| N110 | 8.2 | 2077 | — | 9.2 | 2239 | — |
| H-110 | 10.5 | 2230 | — | 11.0 | 2265 | — |
| **IMR-4227** | 10.0 | 2105 | — | **11.7+** | **2348** | — |
| AA-1680 | 12.6 | 2118 | — | 14.0+ | 2285 | — |

**45 gr. Jacketed SP**
1.722" OAL
**BC:** .202
**SD:** .128

| Powder | Sugg Starting Grains | Velocity fps | Pressure | Max Load Grains | Velocity fps | Pressure |
|---|---|---|---|---|---|---|
| 2400 | 7.0 | 1920 | — | 8.3 | 2238 | — |
| N110 | 7.9 | 2005 | — | 8.8 | 2107 | — |
| H-110 | 9.8 | 2280 | — | 10.2 | 2348 | — |
| **IMR-4227** | 10.0 | 2062 | — | **11.3** | **2280** | — |
| AA-1680 | 11.2 | 2002 | — | 12.5 | 2145 | — |

**Note:** Loads shown in shaded panels are maximum.
Loads shown in bold designate potentially most accurate load.
+ Designates a compressed powder charge.

# 22 Hornet

**50 gr. Jacketed V-Max**
1.723" OAL
**BC:** .242
**SD:** .142

| Powder | Sugg Starting Grains | Velocity fps | Pressure | Max Load Grains | Velocity fps | Pressure |
|---|---|---|---|---|---|---|
| 2400 | 6.3 | 1695 | — | 7.0 | 1854 | — |
| **N110** | **7.3** | **1840** | — | 8.2 | 1963 | — |
| H-110 | 9.0 | 2107 | — | 9.5 | 2187 | — |
| IMR-4227 | 9.9 | 2128 | — | 11.0+ | 2236 | — |
| AA-1680 | 9.9 | 1833 | — | 11.0+ | 2005 | — |

**52 gr. Jacketed A-Max**
1.800" OAL
**BC:** .247
**SD:** .148

| Powder | Sugg Starting Grains | Velocity fps | Pressure | Max Load Grains | Velocity fps | Pressure |
|---|---|---|---|---|---|---|
| 2400 | 6.1 | 1607 | — | 6.8 | 1771 | — |
| N110 | 7.2 | 1790 | — | 8.0 | 1899 | — |
| H-110 | 8.5 | 2055 | — | 9.0 | 2133 | — |
| **IMR-4227** | 9.5 | 1922 | — | **10.5** | **2077** | — |
| AA-1680 | 9.7 | 1792 | — | 10.8 | 1944 | — |

**#225438**
44 gr. (#2 Alloy) 1.675" OAL
**BC:** .094
**SD:** .125

| Powder | Sugg Starting Grains | Velocity fps | Pressure | Max Load Grains | Velocity fps | Pressure |
|---|---|---|---|---|---|---|
| Unique | 4.2 | 1715 | — | 4.7 | 1836 | — |
| 2400 | 5.4 | 1594 | — | 6.0 | 1693 | — |
| N110 | 6.3 | 1668 | — | 7.0 | 1847 | — |
| **IMR-4227** | 7.2 | 1732 | — | **8.0** | **1890** | — |
| AA-1680 | 9.4 | 1909 | — | 10.5 | 1874 | — |

**#225415**
55 gr. (#2 Alloy) 1.694" OAL
**BC:** .162
**SD:** .157

| Powder | Sugg Starting Grains | Velocity fps | Pressure | Max Load Grains | Velocity fps | Pressure |
|---|---|---|---|---|---|---|
| 700X | 2.0 | 1084 | — | 3.7 | 1558 | — |
| **Green Dot** | **2.5** | **1195** | — | 4.2 | 1635 | — |
| Unique | 3.0 | 1281 | — | 4.6 | 1673 | — |
| SR-7625 | 3.0 | 1138 | — | 4.4 | 1601 | — |
| SR-4759 | 5.6 | 1403 | — | 7.5 | 1848 | — |

**Note:** Loads shown in shaded panels are maximum.
Loads shown in bold designate potentially most accurate load.
\+ Designates a compressed powder charge.

# 223 Remington

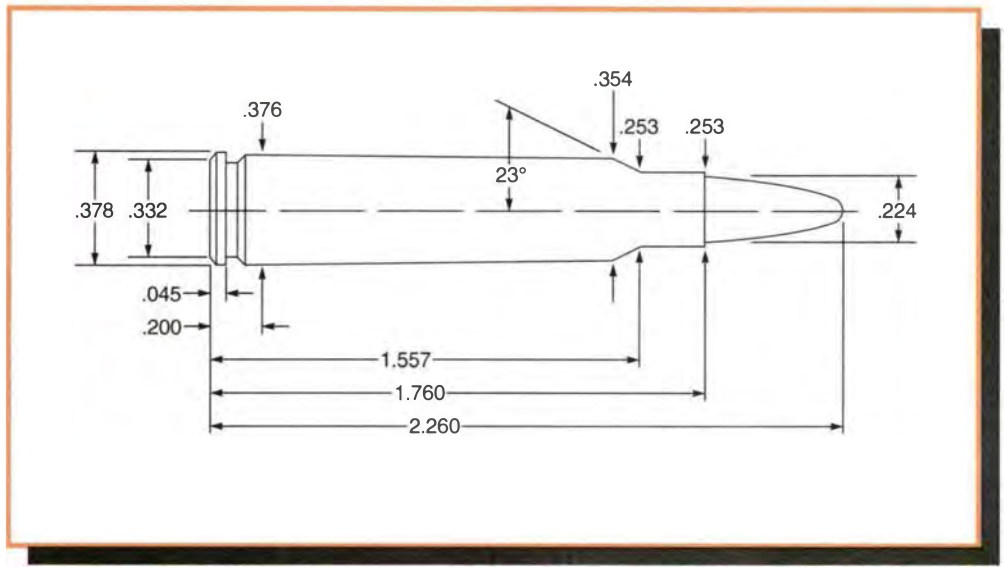


**Comments:**

The 223 Remington has seen extensive use with heavy bullets in recent years in conjunction with faster twist barrels. However, the 1-14" twist of the T/C Contender requires use of lighter weight varmint style bullets for peak performance. Both the 40 and 50-grain jacketed bullets used showed a four to 500 foot per second reduction in velocity compared to a 24-inch barrel. Both listed bullets will ably perform at these velocities due to their construction. IMR-3031 has usually worked well for jacketed bullets in the 223. XMP-5744 produced good accuracy with both cast bullets. Approach all maximum loads with caution and back off powder charges at any sign of high pressure.

**Test Components:**

Cases . . . . . .Remington
Trim-to Length . . . . . .1.750"
Primers . . . . . .Remington 7½
Primer Size . . . . . .Small Rifle
Lyman Shell Holder . . . . . .No. 26
Jacketed Bullets Used . . .Hornady V-Max #22241, 40 gr.
Sierra Blitz #1340, 50 gr.
Cast Bullets Used . . . . . .(sized to .224" dia)
*gas check bullet *#225415, 55 gr.
*#225646, 55 gr.

**Test Specifications:**
**(Velocity Only)**

Firearm Used . . . . . .Thompson/Center Contender
Barrel Length . . . . . .14"
Twist . . . . . .1-14"
Groove Dia. . . . . .224"

**40 gr. Jacketed V-Max** — 2.215" OAL — **BC:** .200 **SD:** .114

| Powder | Sugg Starting Grains | Velocity fps | Pressure | Max Load Grains | Velocity fps | Pressure |
|---|---|---|---|---|---|---|
| IMR-4198 | 20.5 | 2892 | — | 22.9 | 3143 | — |
| XMR-2015 | 24.5 | 2882 | — | 27.0+ | 3171 | — |
| RX7 | 21.5 | 2848 | — | 24.0 | 3151 | — |
| IMR-3031 | 23.5 | 2480 | — | 26.0+ | 2931 | — |
| **H-322** | 24.3 | 2780 | — | **27.0** | **3141** | — |
| AA-2230 | 24.3 | 2808 | — | 27.0 | 3116 | — |

**50 gr. Jacketed SP** — 2.235" OAL — **BC:** .222 **SD:** .142

| Powder | Sugg Starting Grains | Velocity fps | Pressure | Max Load Grains | Velocity fps | Pressure |
|---|---|---|---|---|---|---|
| **IMR-4198** | **20.0** | **2694** | — | 22.0 | 2868 | — |
| XMR-2015 | 23.0 | 2542 | — | 25.0 | 2884 | — |
| RX7 | 21.5 | 2721 | — | 24.0 | 3043 | — |
| IMR-3031 | 22.0 | 2229 | — | 25.5+ | 2798 | — |
| Benchmark | 23.5 | 2529 | — | 26.5 | 2930 | — |
| AA-2230 | 23.5 | 2654 | — | 26.5 | 3098 | — |

# 223 Remington

**#225415**
55 gr. (#2 Alloy) 2.060" OAL
**BC:** .162
**SD:** .157

| Powder | Sugg Starting Grains | Velocity fps | Pressure | Max Load Grains | Velocity fps | Pressure |
|---|---|---|---|---|---|---|
| **Unique** | 6.0 | 1703 | — | **8.0** | **2029** | — |
| SR-4759 | 11.0 | 1834 | — | 13.0 | 2094 | — |
| IMR-4227 | 10.5 | 1745 | — | 12.5 | 2086 | — |
| XMP-5744 | 11.0 | 1582 | — | 14.5 | 2011 | — |
| 748 | 21.0 | 1839 | — | 23.0 | 2080 | — |

**#225646**
55 gr. (#2 Alloy) 2.260" OAL
**BC:** .155
**SD:** .157

| Powder | Sugg Starting Grains | Velocity fps | Pressure | Max Load Grains | Velocity fps | Pressure |
|---|---|---|---|---|---|---|
| **Unique** | **6.0** | **1605** | — | 9.0 | 2068 | — |
| SR-7625 | 6.7 | 1639 | — | 9.5 | 2049 | — |
| AA#9 | 7.8 | 1534 | — | 11.0 | 1997 | — |
| 2400 | 8.0 | 1524 | — | 11.5 | 2003 | — |
| SR-4759 | 9.5 | 1527 | — | 11.5 | 1971 | — |
| IMR-4227 | 10.0 | 1595 | — | 13.0 | 2037 | — |
| XMP-5744 | 10.0 | 1552 | — | 14.0 | 1935 | — |
| AA-1680 | 11.0 | 1629 | — | 14.3 | 2065 | — |

**Note:** Loads shown in shaded panels are maximum.
Loads shown in bold designate potentially most accurate load.
+ Designates a compressed powder charge.

# 22-250 Remington

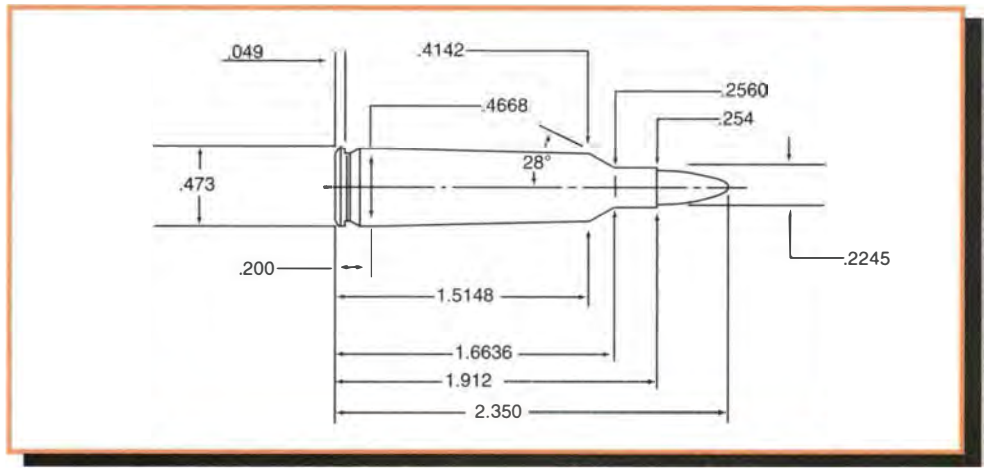


## Comments:

The 22-250 Remington has been a very popular varmint round for some time. The full power jacketed loads fired in the 15-inch barrel of the Thompson/Center Encore produce around 400 feet per second less than with a full-length 24-inch rifle barrel. These velocity levels with the Encore are still about the same as they would be if fired in a 223 Remington with a standard 24-inch barrel with equivalent weight bullets. Lubing the nose grooves on cast bullet #225646 is optional. Approach all maximum loads with caution and back off powder charges at any sign of high pressure

## Test Components:

Cases . . . . . .Winchester
Trim-to Length . . . . . .1.902"
Primers . . . . . .Winchester WLR
Primer Size . . . . . .Large Rifle
Lyman Shell Holder . . . . . .No. 2
Jacketed Bullets Used . . . . . .Sierra SPT #1310, 45 gr.
Hornady V-Max #22271, 55 gr.
Cast Bullets Used . . . . . .(sized to .224" dia)
*gas check bullet *#225646, 55 gr.

**45 gr. Jacketed SPT** — 2.310" OAL — **BC:** .210 **SD:** .128

| Powder | Sugg Starting Grains | Velocity fps | Pressure | Max Load Grains | Velocity fps | Pressure |
|---|---|---|---|---|---|---|
| IMR-3031 | 31.0 | 2925 | — | 35.5 | 3350 | — |
| AA-2230 | 33.3 | 3469 | — | 36.5 | 3674 | — |
| **IMR-4895** | **32.5** | **2859** | — | 36.5 | 3331 | — |
| AA-2460 | 34.0 | 3238 | — | 37.2 | 3472 | — |
| Varget | 36.0 | 3071 | — | 39.5 | 3551 | — |
| RX15 | 33.5 | 2949 | — | 37.0 | 3279 | — |
| *SR-4759 | 15.0 | 2138 | — | 19.5 | 2775 | — |
| *XMP-5744 | 18.0 | 2133 | — | 23.5 | 2646 | — |

## Test Specifications: (Velocity Only)

Firearm Used . . . . . .Thompson/Center Encore
Barrel Length . . . . . .15"
Twist . . . . . .1-12"
Groove Dia. . . . . .224"

**55 gr. Jacketed V-Max** — 2.345" OAL — **BC:** .255 **SD:** .157

| Powder | Sugg Starting Grains | Velocity fps | Pressure | Max Load Grains | Velocity fps | Pressure |
|---|---|---|---|---|---|---|
| IMR-4895 | 32.0 | 2869 | — | 35.5 | 3156 | — |
| AA-2460 | 30.0 | 2741 | — | 34.8 | 3142 | — |
| **IMR-4064** | **32.0** | **2682** | — | 35.5 | 3172 | — |
| Varget | 34.0 | 2912 | — | 37.0 | 3263 | — |
| RX15 | 31.7 | 2649 | — | 35.5 | 3040 | — |
| N150 | 32.7 | 2775 | — | 36.5 | 3173 | — |
| **SR-4759 | 16.0 | 2261 | — | 20.0 | 2702 | — |
| **XMP-5744 | 18.5 | 2148 | — | 24.5 | 2721 | — |

**#225646** — 55 gr. (#2 Alloy) 2.350" OAL — **BC:** .155 **SD:** .157

| Powder | Sugg Starting Grains | Velocity fps | Pressure | Max Load Grains | Velocity fps | Pressure |
|---|---|---|---|---|---|---|
| Red Dot | 7.7 | 1790 | — | 10.4 | 2105 | — |
| 700X | 8.0 | 1851 | — | 11.0 | 2236 | — |
| PB | 9.0 | 1828 | — | 11.0 | 2104 | — |
| **SR-7625** | **9.2** | **1825** | — | 11.7 | 2121 | — |
| SR-4756 | 10.2 | 1925 | — | 12.6 | 2158 | — |
| SR-4759 | 16.5 | 2241 | — | 18.5 | 2525 | — |
| IMR-4227 | 16.5 | 2073 | — | 21.0 | 2449 | — |
| IMR-4198 | 18.5 | 2051 | — | 24.6 | 2653 | — |
| XMP-5744 | 16.0 | 1921 | — | 18.0 | 2126 | — |

**Note:** Loads shown in shaded panels are maximum.
Loads shown in bold designate potentially most accurate load.
**Reduced load.

# 243 Winchester

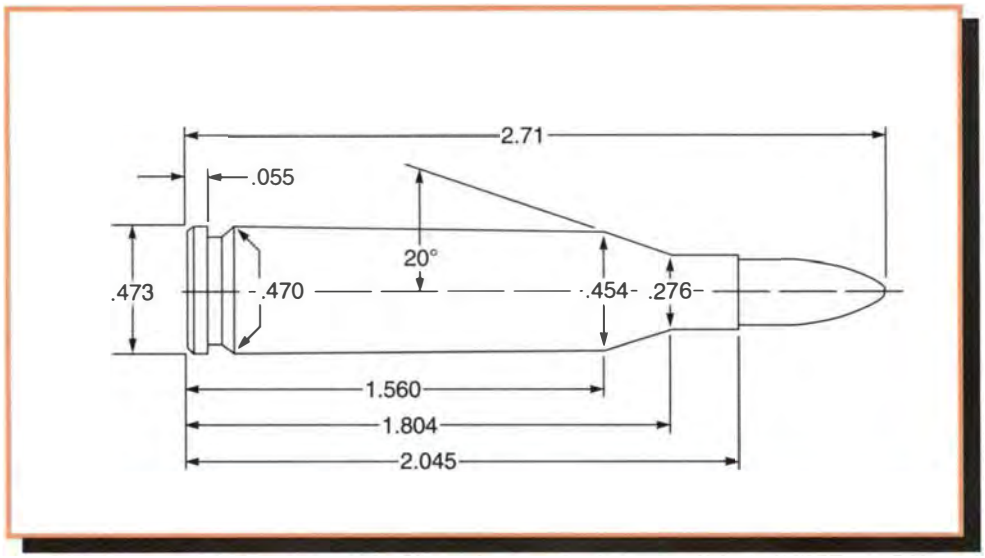


**Comments:**

The 80-grain jacketed bullet is intended for varmint-sized game. This bullet showed about 400 foot per second difference when compared to a 24-inch barrel. Loads listed for cast bullet #245496 showed particularly good ballistic uniformity.

Approach all maximum loads with caution and back off powder charges at any sign of high pressure.

**Test Components:**

Cases . . . . . .Remington
Trim-to Length . . . . . .2.035"
Primers . . . . . .Remington 9½
Primer Size . . . . . .Large Rifle
Lyman Shell Holder . . . . . .No. 2
Jacketed Bullets Used . . . . . .Speer SP #1211, 80 gr.
Cast Bullets Used . . . . . .(sized to .243" dia)
*gas check bullet *#245496, 84 gr.

**Test Specifications:**
**(Velocity Only)**

Firearm Used . . . . . .Thompson/Center Encore
Barrel Length . . . . . .15"
Twist . . . . . .1-10"
Groove Dia. . . . . .243"

**80 gr. Jacketed SP** — 2.655" OAL — **BC:** .365 **SD:** .194

| Powder | Sugg Starting Grains | Velocity fps | Pressure | Max Load Grains | Velocity fps | Pressure |
|---|---|---|---|---|---|---|
| IMR-4198 | 27.5 | 2531 | — | 31.5 | 2769 | — |
| XMR-2015 | 26.0 | 2035 | — | 32.0 | 2412 | — |
| IMR-3031 | 33.0 | 2622 | — | 37.5 | 2858 | — |
| IMR-4064 | 34.0 | 2433 | — | 39.5 | 2804 | — |
| **IMR-4320** | 36.0 | 2619 | — | **40.5** | **2934** | — |
| **XMP-5744 | 19.5 | 1866 | — | 22.0 | 2048 | — |

**#245496** — 84 gr. (#2 Alloy) 2.480" OAL — **BC:** .202 **SD:** .203

| Powder | Sugg Starting Grains | Velocity fps | Pressure | Max Load Grains | Velocity fps | Pressure |
|---|---|---|---|---|---|---|
| 700X | 8.5 | 1613 | — | 10.5 | 1802 | — |
| **SR-7625** | **9.5** | **1541** | — | 11.5 | 1730 | — |
| SR-4756 | 11.0 | 1666 | — | 13.0 | 1841 | — |
| SR-4759 | 15.0 | 1783 | — | 20.0 | 2194 | — |
| XMP-5744 | 13.0 | 1377 | — | 17.5 | 1739 | — |
| IMR-4227 | 15.5 | 1670 | — | 20.0 | 2015 | — |
| IMR-4198 | 16.0 | 1650 | — | 22.7 | 2121 | — |

**Note:** Loads shown in shaded panels are maximum.
Loads shown in bold designate potentially most accurate load.
**Reduced load.

# 25-06 Remington

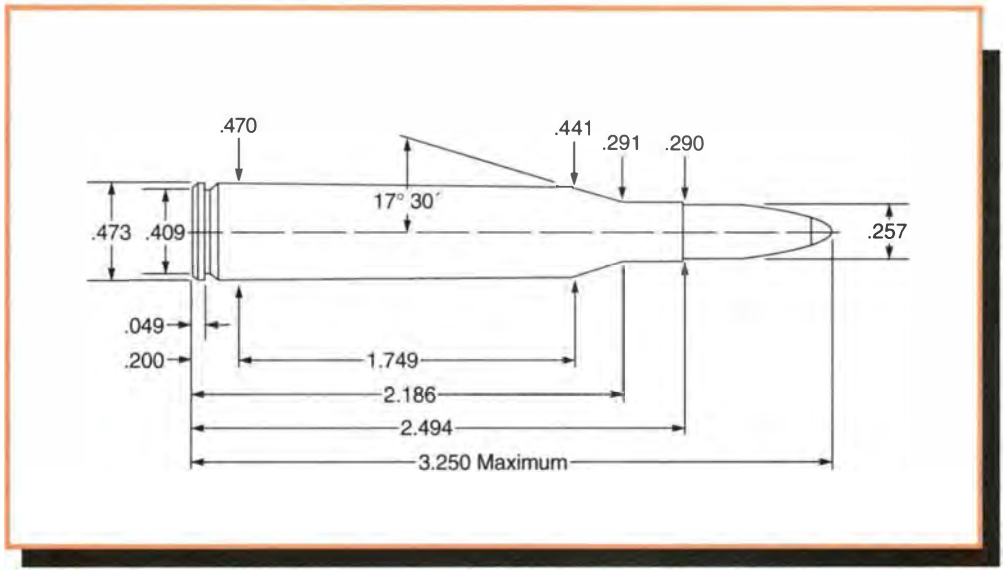


**Comments:**

The 87-grain jacketed bullet showed approximately a 400 foot per second difference when compared to a full-length rifle barrel. Cast bullet #257420 was originally designed for use in the 25-20 and is suited to the velocity levels shown with the 15-inch barrel of the 25-06 Encore. Approach all maximum loads with caution and back off powder charges at any sign of high pressure.

**Test Components:**

Cases . . . . . .Remington
Trim-to Length . . . . . .2.484"
Primers . . . . . .Winchester WLR
Primer Size . . . . . .Large Rifle
Lyman Shell Holder . . . . . .No. 2
Jacketed Bullets Used . . . . .Hornady SP #2530, 87 gr.
Cast Bullets Used . . . . . .(sized to .257" dia)
*gas check bullet *#257420, 65 gr.

**Test Specifications:**
**(Velocity Only)**

Firearm Used . . . . . .Thompson/Center Encore
Barrel Length . . . . . .15"
Twist . . . . . .1-10"
Groove Dia. . . . . .257"

**87 gr. Jacketed SP**
3.096" OAL
**BC:** .322
**SD:** .188

| Powder | Sugg Starting Grains | Velocity fps | Pressure | Max Load Grains | Velocity fps | Pressure |
|---|---|---|---|---|---|---|
| IMR-3031 | 42.0 | 2667 | — | 47.0 | 3007 | — |
| IMR-4064 | 44.0 | 2617 | — | 48.5 | 2883 | — |
| **IMR-4320** | 44.0 | 2610 | — | **49.0** | **3014** | — |
| RX15 | 43.0 | 2560 | — | 48.0 | 2875 | — |
| RX19 | 50.5 | 2382 | — | 57.0 | 2845 | — |
| **SR-4759 | 17.0 | 1833 | — | 19.0 | 1947 | — |
| **XMP-5744 | 22.5 | 1866 | — | 25.0 | 2031 | — |

**#257420**
65 gr. (#2 Alloy) 2.815" OAL
**BC:** .129
**SD:** .140

| Powder | Sugg Starting Grains | Velocity fps | Pressure | Max Load Grains | Velocity fps | Pressure |
|---|---|---|---|---|---|---|
| Unique | 12.8 | 1966 | — | 17.0 | 2341 | — |
| SR-7625 | 11.0 | 1685 | — | 15.0 | 2091 | — |
| SR-4756 | 12.0 | 1692 | — | 16.0 | 2090 | — |
| SR-4759 | 18.0 | 1745 | — | 24.0 | 2378 | — |
| IMR-4227 | 19.0 | 1577 | — | 25.0 | 2060 | — |
| **XMP-5744** | **20.0** | **1759** | — | 27.0 | 2199 | — |
| IMR-4198 | 19.0 | 1531 | — | 26.0 | 1972 | — |

**Note:** Loads shown in shaded panels are maximum.
Loads shown in bold designate potentially most accurate load.
**Designates a reduced load.

# 270 Winchester

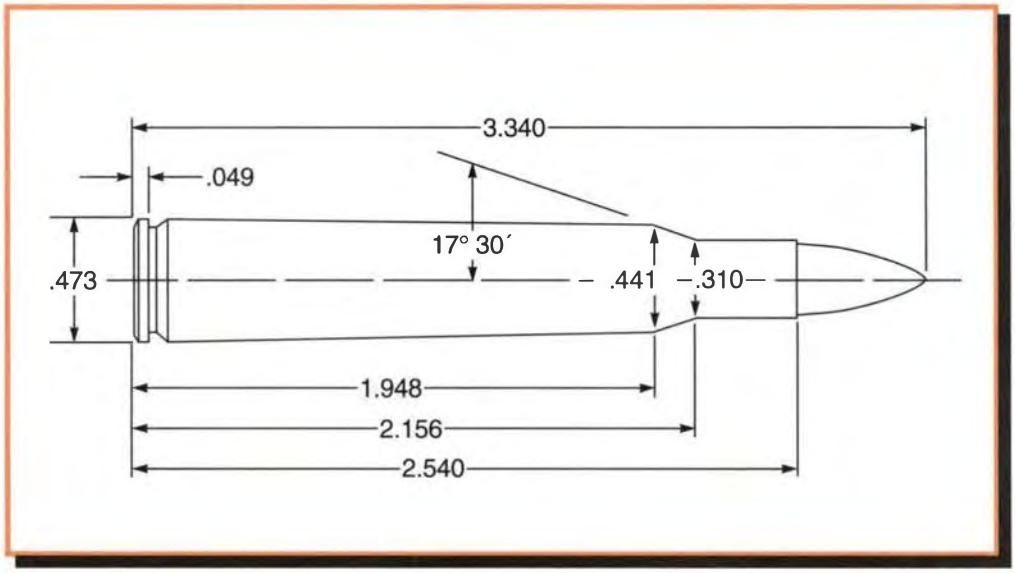


**Comments:**

Loads for both the 100 and 130-grain bullets showed a nearly 500 foot per second difference when compared to a full-length barrel. Cast bullet # 280642 displayed excellent ballistic uniformity, as did the reduced loads for the 130-grain jacketed bullet. Lube grooves on the nose of the cast bullet can be lubed by hand if the shooter desires. Approach all maximum loads with caution and back off powder charges at any sign of high pressure.

**Test Components:**

Cases . . . . . .Winchester
Trim-to Length . . . . . .2.530"
Primers . . . . . .Winchester WLR
Primer Size . . . . . .Large Rifle
Lyman Shell Holder . . . . . .No. 2
Jacketed Bullets Used . . . .Hornady SP #2710, 100 gr.
Sierra SBT #1820, 130 gr.

Cast Bullets Used . . . . . .(sized to .277" dia)
*gas check bullet *#280642, 150 gr.

**Test Specifications:**
**(Velocity Only)**

Firearm Used . . . . . .Thompson/Center Encore
Barrel Length . . . . . .15"
Twist . . . . . .1-10"
Groove Dia. . . . . .277"

**100 gr. Jacketed SP** — 3.175" OAL — **BC:** .307 **SD:** .186

| Powder | Sugg Starting Grains | Velocity fps | Pressure | Max Load Grains | Velocity fps | Pressure |
|---|---|---|---|---|---|---|
| IMR-4895 | 46.5 | 2491 | — | 50.0 | 2828 | — |
| IMR-4064 | 46.0 | 2484 | — | 51.5 | 2811 | — |
| Varget | 47.0 | 2517 | — | 52.0 | 2851 | — |
| **RX15** | **48.0** | **2601** | — | 53.5 | 2909 | — |
| **SR-4759 | 23.0 | 2037 | — | 27.5 | 2317 | — |
| **XMP-5744 | 27.0 | 1958 | — | 31.3 | 2184 | — |

**#280642** — 150 gr. (#2 Alloy) 3.225" OAL — **BC:** .260 **SD:** .279

| Powder | Sugg Starting Grains | Velocity fps | Pressure | Max Load Grains | Velocity fps | Pressure |
|---|---|---|---|---|---|---|
| Unique | 12.0 | 1405 | — | 19.0 | 1845 | — |
| SR-7625 | 13.0 | 1404 | — | 18.0 | 1713 | — |
| SR-4756 | 13.0 | 1370 | — | 19.0 | 1745 | — |
| **SR-4759** | 16.0 | 1395 | — | **23.0** | **1842** | — |
| XMP-5744 | 18.0 | 1346 | — | 24.5 | 1721 | — |
| AA-1680 | 20.0 | 1428 | — | 28.0 | 1841 | — |
| RX7 | 19.0 | 1376 | — | 27.0 | 1812 | — |

**130 gr. Jacketed SBT** — 3.250" OAL — **BC:** .418 **SD:** .242

| Powder | Sugg Starting Grains | Velocity fps | Pressure | Max Load Grains | Velocity fps | Pressure |
|---|---|---|---|---|---|---|
| IMR-4895 | 42.0 | 2324 | — | 46.5 | 2576 | — |
| **IMR-4064** | 44.0 | 2358 | — | **48.0** | **2569** | — |
| Varget | 42.0 | 2267 | — | 46.0 | 2442 | — |
| RX15 | 44.0 | 2359 | — | 47.0 | 2477 | — |
| **SR-4759 | 24.0 | 1943 | — | 28.5 | 2219 | — |
| **XMP-5744 | 27.0 | 1877 | — | 31.0 | 2106 | — |

**Note:** Loads shown in shaded panels are maximum.
Loads shown in bold designate potentially most accurate load.
**Designates a reduced load.

# 7-30 Waters

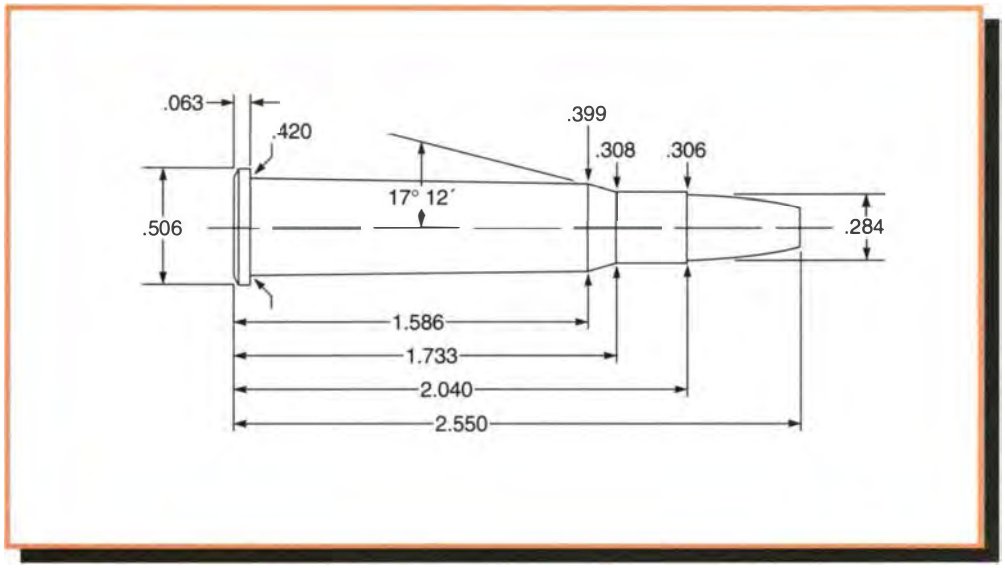


**Comments:**

This is a modified version of the 30-30 Win. that has gained some popularity, perhaps because of the recent trend toward 7mm cartridges and bullets.

The cartridge is suitable for light big game at modest ranges. The Thompson/Center Contender, being a single shot design, allows the use of Spitzer bullets. Good powder choices are Winchester 748 and IMR 3031.

**Test Components:**

Cases . . . . . .Federal
Trim-to Length . . . . . .2.030"
Primers . . . . . .CCI 200
Primer Size . . . . . .Large Rifle
Lyman Shell Holder . . . . . .No. 6
Jacketed Bullets Used . . . . . .Sierra SP #1900, 120 gr.
Sierra SP #7250, 130 gr.
Sierra SBT #1905, 140 gr.
Sierra SBT #1913, 150 gr.
Sierra HPBT #1925, 160 gr.
Cast Bullets Used . . . . . .(sized to .285" dia)
*gas check bullet *#287346, 135 gr.

**Test Specifications:**
**(Velocity Only)**

Firearm Used . . . . . .Thompson/Center Contender
Barrel Length . . . . . .14"
Twist . . . . . .1-9"
Groove Dia. . . . . .284"

**120 gr. Jacketed SP**
2.550" OAL
**BC:** .326
**SD:** .213

| Powder | Sugg Starting Grains | Velocity fps | Pressure | Max Load Grains | Velocity fps | Pressure |
|---|---|---|---|---|---|---|
| IMR-3031 | 30.5 | 2063 | — | 34.5+ | 2350 | — |
| H-335 | 31.0 | 2096 | — | 34.8 | 2398 | — |
| AA-2460 | 29.5 | 1974 | — | 33.8 | 2267 | — |
| **BL-C (2)** | 32.3 | 1955 | — | **36.8** | **2316** | — |
| IMR-4895 | 31.8 | 2068 | — | 35.8+ | 2312 | — |
| 748 | 34.0 | 2073 | — | 39.5+ | 2430 | — |

**130 gr. Jacketed SP**
2.550" OAL
**BC:** .321
**SD:** .230

| Powder | Sugg Starting Grains | Velocity fps | Pressure | Max Load Grains | Velocity fps | Pressure |
|---|---|---|---|---|---|---|
| IMR-3031 | 29.5 | 2081 | — | 33.6+ | 2254 | — |
| **H-335** | 29.5 | 1912 | — | **33.5** | **2249** | — |
| AA-2460 | 28.3 | 1918 | — | 32.3 | 2124 | — |
| BL-C (2) | 31.7 | 1897 | — | 35.9 | 2212 | — |
| IMR-4895 | 30.0 | 1950 | — | 34.6+ | 2201 | — |
| 748 | 31.0 | 1778 | — | 35.0+ | 2171 | — |

**Note:** Loads shown in shaded panels are maximum.
Loads shown in bold designate potentially most accurate load.
+ Designates a compressed powder charge.

# 7-30 Waters

**140 gr. Jacketed SBT**
2.550" OAL
**BC:** .418
**SD:** .248

| Powder | Sugg Starting Grains | Velocity fps | Pressure | Max Load Grains | Velocity fps | Pressure |
|---|---|---|---|---|---|---|
| IMR-3031 | 27.5 | 1856 | — | 32.6+ | 2175 | — |
| **H-335** | 28.7 | 1818 | — | **33.0** | **2192** | — |
| AA-2460 | 29.0 | 1914 | — | 32.6 | 2152 | — |
| BL-C(2) | 31.4 | 1920 | — | 35.0 | 2141 | — |
| IMR-4895 | 28.8 | 1839 | — | 33.6+ | 2173 | — |
| 748 | 31.5 | 1920 | — | 34.5 | 2134 | — |

**150 gr. Jacketed SBT**
2.550" OAL
**BC:** .430
**SD:** .266

| Powder | Sugg Starting Grains | Velocity fps | Pressure | Max Load Grains | Velocity fps | Pressure |
|---|---|---|---|---|---|---|
| IMR-3031 | 26.2 | 1850 | — | 30.7+ | 2060 | — |
| H-335 | 27.5 | 1865 | — | 32.0 | 2129 | — |
| AA-2460 | 26.7 | 1806 | — | 31.6 | 2024 | — |
| BL-C(2) | 30.3 | 1858 | — | 33.7 | 2070 | — |
| IMR-4895 | 28.2 | 1831 | — | 32.5+ | 2112 | — |
| **748** | 31.6 | 1927 | — | **34.8+** | **2180** | — |

**160 gr. Jacketed HPBT**
2.550" OAL
**BC:** .394
**SD:** .283

| Powder | Sugg Starting Grains | Velocity fps | Pressure | Max Load Grains | Velocity fps | Pressure |
|---|---|---|---|---|---|---|
| IMR-3031 | 23.6 | 1688 | — | 27.8+ | 1963 | — |
| H-335 | 27.0 | 1768 | — | 31.4 | 2029 | — |
| AA-2460 | 26.7 | 1786 | — | 30.8 | 1960 | — |
| BL-C(2) | 29.7 | 1789 | — | 33.3 | 2021 | — |
| IMR-4895 | 25.8 | 1787 | — | 29.7+ | 1968 | — |
| **748** | 31.5 | 1875 | — | **34.8+** | **2111** | — |

**#287346**
135 gr. (#2 Alloy) 2.475" OAL
**BC:** .235
**SD:** .237

| Powder | Sugg Starting Grains | Velocity fps | Pressure | Max Load Grains | Velocity fps | Pressure |
|---|---|---|---|---|---|---|
| SR-4759 | 16.5 | 1592 | — | 20.0 | 1916 | — |
| XMP-5744 | 20.0 | 1694 | — | 22.5 | 1872 | — |
| RX7 | 23.0 | 1901 | — | 26.9 | 2069 | — |
| IMR-3031 | 25.5 | 1793 | — | 31.0+ | 2139 | — |
| H-335 | 26.2 | 1811 | — | 32.0 | 2161 | — |
| **AA-2460** | 26.0 | 1847 | — | **32.0** | **2123** | — |
| 748 | 29.5 | 1827 | — | 33.5+ | 2123 | — |

**Note:** Loads shown in shaded panels are maximum.
Loads shown in bold designate potentially most accurate load.
\+ Designates a compressed powder charge.

# 7mm-08 Remington

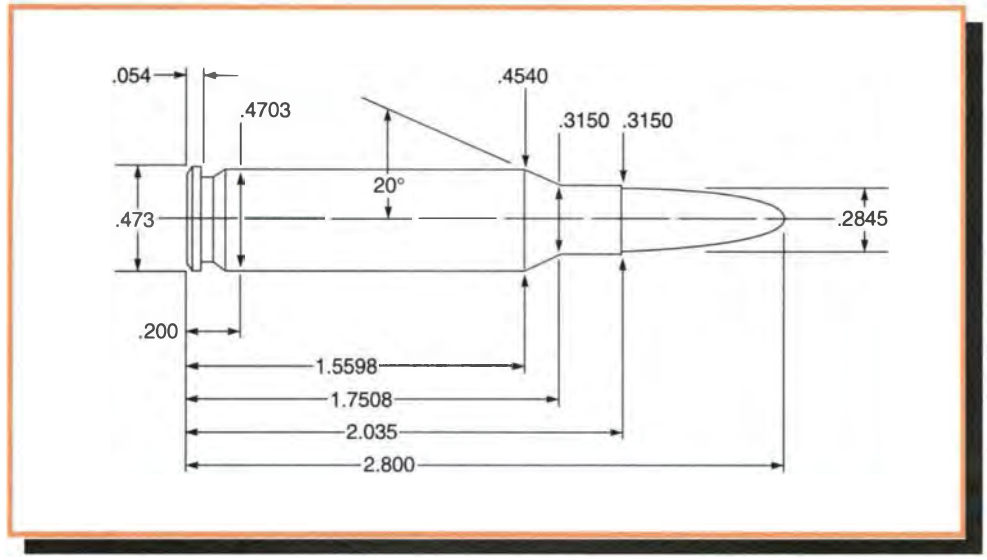


**Comments:**

The 7mm-08 has become popular for High-Power, hunting, and metallic silhouette applications. The loads listed below were worked up in a pressure barrel and fired through both a 12 and 15-inch barrel. The 15-inch barrel yielded velocities around 300 feet per second below those listed for he full-length 24-inch barrel. The 12-inch barrel showed a loss of one hundred to 175 feet per second from the 15-inch barrel. Unique, SR-4759, and XMP-5744 all produced excellent ballistic uniformity with both cast bullets. Approach all loads wi h caution and back off powder charges at any sign of high pressure.

**Test Components:**

Cases . . . . . .Remington
Trim-to Length . . . . . .2.025"
Primers . . . . . .Remington 9½
Primer Size . . . . . .Large Rifle
Lyman Shell Holder . . . . . .No. 2
Jacketed Bullets Used . . . .Hornady SP #2820, 139 gr.
Hornady SP #2830, 154 gr.
Cast Bullets Used . . . . . .(sized to .284" dia)
*gas check bullet *#287346, 135 gr.
*#287641, 160 gr.

**Test Specifications:**
**(Velocity Only)**

Firearm Used . . . . . .Thompson/Center Encore
Barrel Length . . . . . .12" & 15"
Twist . . . . . .1-9"
Groove Dia. . . . . .284"

**139 gr. Jacketed SP**
2.750" OAL
**BC:** .392
**SD:** .246

| Powder | Sugg Starting Grains | 12" Bbl. Velocity fps | 15" Bbl. Velocity fps | Max Load Grains | 12" Bbl. Velocity fps | 15" Bbl. Velocity fps |
|---|---|---|---|---|---|---|
| IMR-3031 | 37.5 | 2162 | 2305 | 40.0 | 2345 | 2524 |
| AA2460 | 37.0 | 2140 | 2398 | 41.0 | 2348 | 2542 |
| **IMR-4895** | 38.0 | 2160 | 2257 | **42.0** | **2332** | **2502** |
| IMR-4064 | 38.0 | 2062 | 2173 | 43.0 | 2407 | 2584 |
| **SR-4759 | 20.0 | 1717 | 1813 | 26.0 | 2102 | 2213 |
| **XMP-5744 | 23.0 | 1676 | 1777 | 28.5 | 1990 | 2123 |

**154 gr. Jacketed SP**
2.800" OAL
**BC:** .433
**SD:** .273

| Powder | Sugg Starting Grains | 12" Bbl. Velocity fps | 15" Bbl. Velocity fps | Max Load Grains | 12" Bbl. Velocity fps | 15" Bbl. Velocity fps |
|---|---|---|---|---|---|---|
| IMR-3031 | 34.5 | 2029 | 2096 | 39.0 | 2296 | 2376 |
| AA-2460 | 35.0 | 2038 | 2062 | 40.0 | 2307 | 2425 |
| **IMR-4895** | 37.0 | 2051 | 2148 | **41.0** | **2293** | **2411** |
| IMR-4064 | 36.5 | 1989 | 2072 | 41.8 | 2330 | 2437 |
| **SR-4759 | 22.0 | 1762 | 1868 | 25.5 | 1993 | 2089 |
| **XMP-5744 | 24.0 | 1698 | 1777 | 27.5 | 1893 | 2012 |

**Note:** Loads shown in shaded panels are maximum.
Loads shown in bold designate potentially most accurate load.
**Reduced load.

# 7mm-08 Remington

**#287346**
135 gr. (#2 Alloy) 2.600" OAL
**BC:** .235
**SD:** .239

| Powder | Sugg Starting Grains | 12" Bbl. Velocity fps | 15" Bbl. Velocity fps | Max Load Grains | 12" Bbl. Velocity fps | 15" Bbl. Velocity fps |
|---|---|---|---|---|---|---|
| **Unique** | **12.0** | **1496** | **1546** | 15.5 | 1743 | 1807 |
| SR-4759 | 15.5 | 1390 | 1505 | 23.5 | 1961 | 2097 |
| IMR-4227 | 15.5 | 1208 | 1358 | 24.0 | 1774 | 1909 |
| **XMP-5744** | **16.5** | **1265** | **1365** | 25.0 | 1775 | 1922 |
| IMR-4198 | 16.5 | 1202 | 1243 | 25.5 | 1755 | 1935 |
| RX7 | 17.5 | 1196 | 1346 | 26.5 | 1724 | 1926 |

**#287641**
160 gr. (#2 Alloy) 2.705" OAL
**BC:** .382
**SD:** .283

| Powder | Sugg Starting Grains | 12" Bbl. Velocity fps | 15" Bbl. Velocity fps | Max Load Grains | 12" Bbl. Velocity fps | 15" Bbl. Velocity fps |
|---|---|---|---|---|---|---|
| Unique | 12.0 | 1378 | 1438 | 15.5 | 1608 | 1660 |
| **SR-4759** | 21.0 | 1708 | 1812 | **26.0** | **1976** | **2074** |
| IMR-4227 | 21.0 | 1549 | 1627 | 27.0 | 1900 | 1993 |
| **XMP-5744** | 18.0 | 1316 | 1448 | **26.0** | **1766** | **1905** |
| IMR-4198 | 23.0 | 1608 | 1719 | 29.5 | 1973 | 2110 |
| RX7 | 22.0 | 1491 | 1625 | 28.0 | 1803 | 1988 |

**Note:** Loads shown in shaded panels are maximum.
Loads shown in bold designate potentially most accurate load.

# 30-30 Winchester

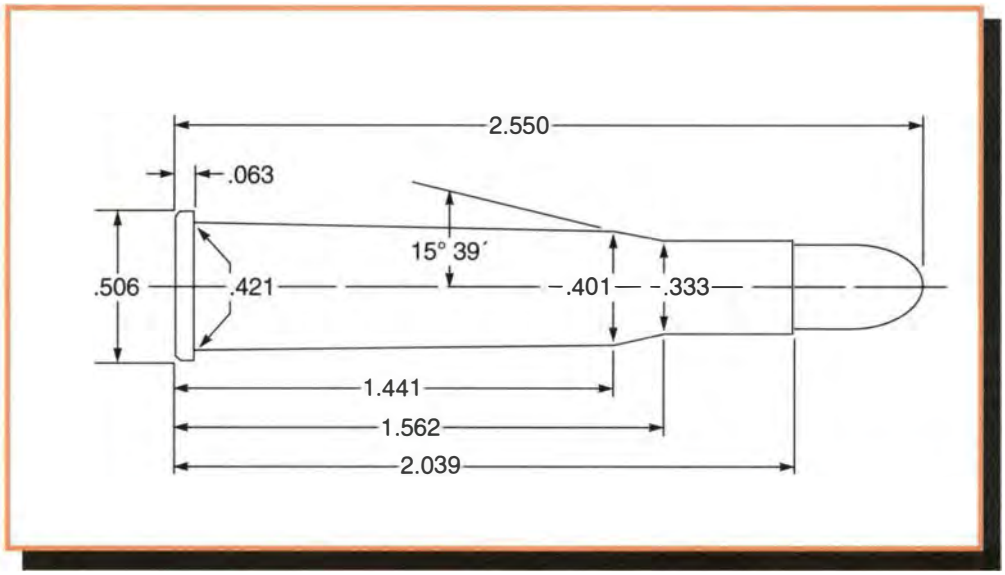


**Comments:**

When used in the Contender this is an extremely accurate cartridge.

The 110 grain to 130 grain bullets are for varmints and plinking. This cartridge works very well with a number of powders including IMR-3031, Winchester 748 and Reloder 7.

It is also very good with cast bullets, particularly #311291.

**Test Components:**

Cases . . . . . .Winchester
Trim-to Length . . . . . .2.029"
Primers . . . . . .Winchester WLR
Primer Size . . . . . .Large Rifle
Lyman Shell Holder . . . . . .No. 6
Jacketed Bullets Used . . . .Hornady SP #3010, 110 gr.
Sierra SP #2120, 125 gr.
Hornady SP #3020, 130 gr.
Hornady SP #3031, 150 gr.
Cast Bullets Used . . . . . .(sized to .309" dia)
*gas check bullet *#311359, 115 gr.
*#311291, 170 gr.
*#311041, 173 gr.

**Test Specifications:**
**(Velocity Only)**

Firearm Used . . . . . .Thompson/Center Contender
Barrel Length . . . . . .14"
Twist . . . . . .1-14"
Groove Dia. . . . . .3087"

**110 gr. Jacketed SP** — 2.530" OAL — **BC:** .256 **SD:** .166

| Powder | Sugg Starting Grains | Velocity fps | Pressure | Max Load Grains | Velocity fps | Pressure |
|---|---|---|---|---|---|---|
| IMR-4198 | 25.0 | 2038 | — | 29.0 | 2346 | — |
| IMR-3031 | 28.5 | 1854 | — | 33.5 | 2166 | — |
| **748** | 35.5 | 1892 | — | **41.0+** | **2222** | — |

**125 gr. Jacketed SP** — 2.600" OAL — **BC:** .277 **SD:** .188

| Powder | Sugg Starting Grains | Velocity fps | Pressure | Max Load Grains | Velocity fps | Pressure |
|---|---|---|---|---|---|---|
| IMR-4198 | 24.0 | 1909 | — | 26.0 | 2159 | — |
| IMR-3031 | 28.0 | 1893 | — | 32.0 | 2239 | — |
| **748** | 35.5 | 1907 | — | **41.0+** | **2210** | — |

**Note:** Loads shown in shaded panels are maximum.
Loads shown in bold designate potentially most accurate load.
+ Designates a compressed powder charge.

# 30-30 Winchester

**130 gr. Jacketed SP**
2.620" OAL
**BC:** .295
**SD:** .196

| Powder | Sugg Starting Grains | Velocity fps | Pressure | Max Load Grains | Velocity fps | Pressure |
|---|---|---|---|---|---|---|
| IMR-4198 | 23.0 | 1768 | — | 25.5 | 2095 | — |
| IMR-3031 | 27.5 | 1779 | — | 31.5 | 2183 | — |
| **748** | 35.0 | 1851 | — | **40.5+** | **2166** | — |

**150 gr. Jacketed SP**
2.745" OAL
**BC:** .338
**SD:** .226

| Powder | Sugg Starting Grains | Velocity fps | Pressure | Max Load Grains | Velocity fps | Pressure |
|---|---|---|---|---|---|---|
| IMR-4198 | 19.5 | 1457 | — | 23.5 | 1749 | — |
| RX7 | 21.0 | 1595 | — | 28.0 | 1934 | — |
| IMR-3031 | 25.5 | 1602 | — | 28.5 | 1847 | — |
| **748** | 33.0 | 1779 | — | **38.5+** | **2077** | — |
| IMR-4064 | 29.0 | 1699 | — | 31.5 | 1950 | — |

**#311359**
115 gr. (#2 Alloy) 2.440" OAL
**BC:** .181
**SD:** .172

| Powder | Sugg Starting Grains | Velocity fps | Pressure | Max Load Grains | Velocity fps | Pressure |
|---|---|---|---|---|---|---|
| **Unique** | 7.5 | 1303 | — | **11.4** | **1740** | — |
| SR-4759 | 18.0 | 1754 | — | 20.0 | 2027 | — |
| RX7 | 20.0 | 1656 | — | 30.5 | 2039 | — |
| IMR-3031 | 26.0 | 1805 | — | 32.0 | 2116 | — |
| 748 | 24.5 | 1531 | — | 36.5 | 1981 | — |

**#311291**
170 gr. (#2 Alloy) 2.540" OAL
**BC:** .202
**SD:** .254

| Powder | Sugg Starting Grains | Velocity fps | Pressure | Max Load Grains | Velocity fps | Pressure |
|---|---|---|---|---|---|---|
| Unique | 7.0 | 1065 | — | 10.6 | 1416 | — |
| SR-4756 | 7.0 | 962 | — | 10.5 | 1283 | — |
| 2400 | 15.0 | 1459 | — | 18.5 | 1704 | — |
| **SR-4759** | 14.8 | 1395 | — | **18.5** | **1650** | — |
| IMR-4227 | 16.5 | 1423 | — | 22.0 | 1812 | — |
| XMP-5744 | 18.0 | 1456 | — | 24.0 | 1856 | — |
| IMR-4198 | 18.0 | 1409 | — | 24.0 | 1870 | — |
| RX7 | 19.0 | 1761 | — | 28.0 | 1936 | — |
| IMR-3031 | 22.5 | 1439 | — | 28.5 | 1927 | — |
| 748 | 23.8 | 1429 | — | 37.3+ | 2025 | — |

**#311041**
173 gr. (#2 Alloy) 2.510" OAL
**BC:** .220
**SD:** .259

| Powder | Sugg Starting Grains | Velocity fps | Pressure | Max Load Grains | Velocity fps | Pressure |
|---|---|---|---|---|---|---|
| Unique | 7.0 | 1084 | — | 10.6 | 1419 | — |
| SR-4756 | 7.0 | 980 | — | 10.5 | 1309 | — |
| 2400 | 14.5 | 1425 | — | 19.0 | 1786 | — |
| SR-4759 | 15.5 | 1442 | — | 17.7 | 1661 | — |
| IMR-4227 | 17.0 | 1449 | — | 22.0 | 1829 | — |
| **XMP-5744** | **17.0** | **1384** | — | 22.0 | 1721 | — |
| IMR-4198 | 18.0 | 1393 | — | 23.5 | 1835 | — |
| RX7 | 20.0 | 1486 | — | 28.6 | 2088 | — |
| IMR-3031 | 21.5 | 1309 | — | 27.0 | 1775 | — |
| 748 | 25.0 | 1482 | — | 35.0 | 1978 | — |

**Note:** Loads shown in shaded panels are maximum.
Loads shown in bold designate potentially most accurate load.
\+ Designates a compressed powder charge.

# 308 Winchester

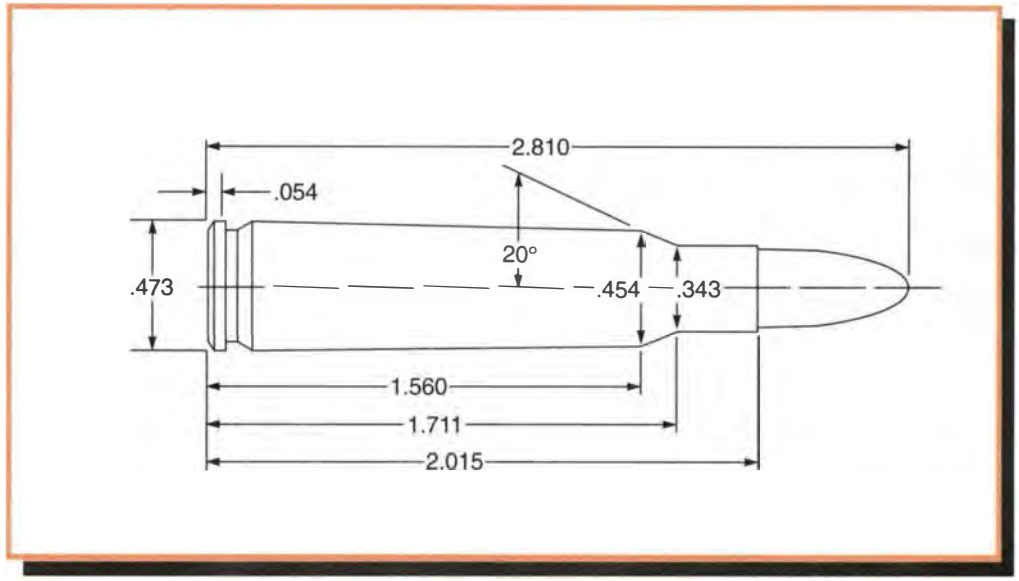


**Comments:**

Cast bullet #311359 produced excellent ballistic uniformity with all powders listed. Cast bullet #311674 and #311332 are ideal candidates for metallic silhouette. XMP-5744 also produced good results with the reduced load for the 165-grain Partition and bullet #311332. Approach all maximum loads with caution and back off powder charges at any sign of high pressure.

**Test Components:**

Cases . . . . . .Remington
Trim-to Length . . . . . .2.005"
Primers . . . . . .Remington 9½
Primer Size . . . . . .Large Rifle
Lyman Shell Holder . . . . . .No. 2
Jacketed Bullets Used . . . .Hornady SP #3020, 130 gr.
Speer SP #2025, 150 gr.
Nosler Partition #16330, 165 gr.
Cast Bullets Used . . . . . .(size to .308" dia)
*gas check bullet *#311359, 115 gr.
*#311672, 160 gr.
*#311332, 180 gr.

**Test Specifications:**
**(Velocity Only)**

Firearm Used . . . . . .Thompson/Center Encore
Barrel Length . . . . . .15"
Twist . . . . . .1-10"
Groove Dia. . . . . .308"

**130 gr. Jacketed SP** — 2.690" OAL — **BC:** .295 **SD:** .196

| Powder | Sugg Starting Grains | Velocity fps | Pressure | Max Load Grains | Velocity fps | Pressure |
|---|---|---|---|---|---|---|
| IMR-4198 | 35.0 | 2442 | — | 38.0 | 2702 | — |
| XMR-2015 | 41.0 | 2419 | — | 45.0 | 2724 | — |
| **Benchmark** | **41.5** | **2529** | — | 46.0 | 2774 | — |
| IMR-3031 | 42.0 | 2489 | — | 45.0+ | 2806 | — |
| IMR-4895 | 43.0 | 2395 | — | 47.0+ | 2694 | — |
| Varget | 46.0 | 2558 | — | 50.0 | 2829 | — |
| **SR-4759 | 26.0 | 2256 | — | 29.0 | 2464 | — |
| **XMP-5744 | 31.0 | 2220 | — | 33.5 | 2385 | — |

**150 gr. Jacketed SP** — 2.735" OAL — **BC:** .301 **SD:** .226

| Powder | Sugg Starting Grains | Velocity fps | Pressure | Max Load Grains | Velocity fps | Pressure |
|---|---|---|---|---|---|---|
| IMR-4198 | 33.0 | 2368 | — | 36.0 | 2580 | — |
| XMR-2015 | 38.0 | 2281 | — | 42.0 | 2490 | — |
| IMR-3031 | 40.0 | 2328 | — | 43.5 | 2596 | — |
| AA-2230 | 40.5 | 2447 | — | 44.5 | 2618 | — |
| IMR-4895 | 40.0 | 2201 | — | 45.0 | 2525 | — |
| **Varget** | 42.5 | 2240 | — | **47.0** | **2505** | — |
| **SR-4759 | 24.5 | 2031 | — | 27.5 | 2207 | — |
| **XMP-5744 | 28.0 | 1986 | — | 31.0 | 2143 | — |

**Note:** Loads shown in shaded panels are maximum.
Loads shown in bold designate potentially most accurate load.
+ Designates a compressed powder charge.
**Reduced load.

# 308 Winchester

**165 gr. Jacketed Partition** — **BC:** .410 **SD:** .248
2.780" OAL

| Powder | Sugg Starting Grains | Velocity fps | Pressure | Max Load Grains | Velocity fps | Pressure |
|---|---|---|---|---|---|---|
| IMR-3031 | 37.0 | 2085 | — | 41.5 | 2454 | — |
| AA-2460 | 38.0 | 2126 | — | 42.5 | 2421 | — |
| IMR-4895 | 37.5 | 1990 | — | 42.5 | 2338 | — |
| Varget | 41.0 | 2133 | — | 46.0 | 2420 | — |
| **N150** | 42.0 | 2228 | — | **47.0+** | **2484** | — |
| **SR-4759 | 23.0 | 1856 | — | 26.0 | 2080 | — |
| **XMP-5744 | 27.0 | 1877 | — | 30.0 | 2051 | — |

**#311359** — **BC:** .181 **SD:** .173
115 gr. (#2 Alloy) 2.430" OAL

| Powder | Sugg Starting Grains | Velocity fps | Pressure | Max Load Grains | Velocity fps | Pressure |
|---|---|---|---|---|---|---|
| Red Dot | 10.0 | 1547 | — | 14.0 | 1866 | — |
| Green Dot | 11.0 | 1605 | — | 15.0 | 1917 | — |
| **Unique** | 12.0 | 1668 | — | **17.0** | **2053** | — |
| SR-7625 | 12.0 | 1599 | — | 15.0 | 1852 | — |
| Herco | 14.0 | 1805 | — | 17.0 | 2027 | — |

**#311672** — **BC:** .245 **SD:** .241
160 gr. (#2 Alloy) 2.635" OAL

| Powder | Sugg Starting Grains | Velocity fps | Pressure | Max Load Grains | Velocity fps | Pressure |
|---|---|---|---|---|---|---|
| Unique | 9.8 | 1317 | — | 13.0 | 1554 | — |
| SR-7625 | 10.7 | 1326 | — | 14.0 | 1564 | — |
| 2400 | 15.5 | 1432 | — | 19.5 | 1707 | — |
| SR-4759 | 18.0 | 1549 | — | 27.5 | 2158 | — |
| **IMR-4227** | 20.0 | 1506 | — | **30.0** | **2178** | — |
| XMP-5744 | 20.0 | 1492 | — | 31.0 | 2148 | — |
| IMR-4198 | 21.0 | 1493 | — | 31.7 | 2178 | — |
| RX7 | 25.0 | 1675 | — | 34.5 | 2274 | — |

**#311332** — **BC:** .320 **SD:** .271
180 gr. (#2 Alloy) 2.705" OAL

| Powder | Sugg Starting Grains | Velocity fps | Pressure | Max Load Grains | Velocity fps | Pressure |
|---|---|---|---|---|---|---|
| Unique | 12.2 | 1429 | — | 15.5 | 1633 | — |
| SR-7625 | 11.5 | 1327 | — | 14.0 | 1494 | — |
| SR-4756 | 13.0 | 1404 | — | 15.5 | 1562 | — |
| 2400 | 17.0 | 1519 | — | 24.0 | 1968 | — |
| SR-4759 | 23.5 | 1825 | — | 26.3 | 1991 | — |
| IMR-4227 | 25.0 | 1764 | — | 29.0 | 2068 | — |
| **XMP-5744** | 21.0 | 1522 | — | **32.5** | **2158** | — |
| IMR-4198 | 26.5 | 1797 | — | 32.0 | 2144 | — |

**Note:** Loads shown in shaded panels are maximum.
Loads shown in bold designate potentially most accurate load.
+ Designates a compressed powder charge.
** Designates a reduced load.

# 30-06 Springfield

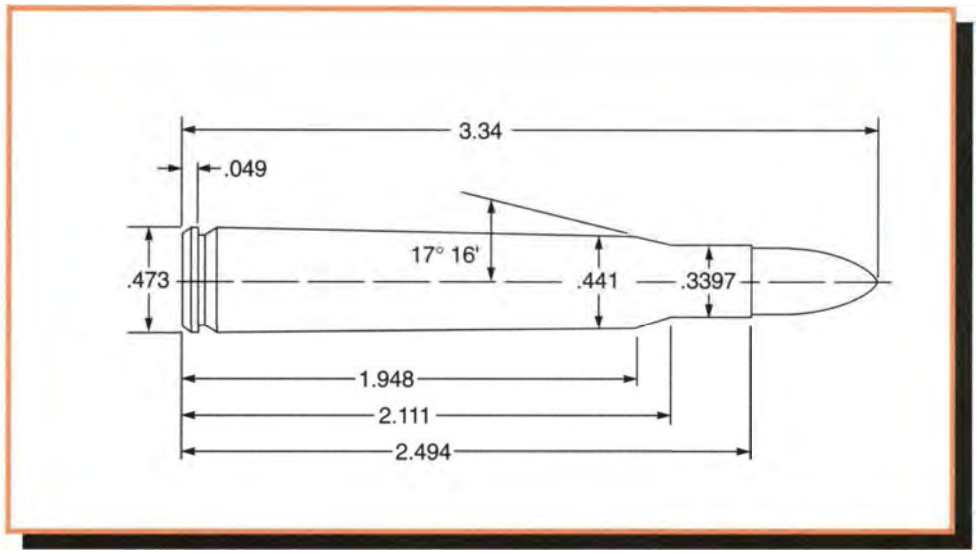


**Comments:**

A member of Lyman's technical staff described recoil of the Thompson/Center Encore with the 15-inch 30-06 barrel as "moderately heavy" with full power jacketed loads. Those seeking milder practice loads can utilize the reduced loads with SR-4759 or XMP-5744. Data listed for the 170-grain Hornady FN bullet will duplicate, and sometimes exceed, the ballistics of a 30-30 Winchester with a 24" barrel. Cast bullet #311359 is a good choice for casual plinking. Cast bullet #311672 and #311644 are good choices for metallic silhouette shooting. Approach all maximum loads with caution and back off powder charges at any sign of high pressure.

**Test Components:**

Cases . . . . . .Winchester
Trim-to Length . . . . . .2.484"
Primers . . . . . .Winchester WLR
Primer Size . . . . . .Large Rifle
Lyman Shell Holder . . . . . .No. 2
Jacketed Bullets Used . . . . .Sierra RN #2135, 150 gr.
Hornady FN #3060, 170 gr.
Cast Bullets Used . . . . . .(sized to .308" dia)
*gas check bullet *#311359, 115 gr.
*#311672, 160 gr.
*#311644, 190 gr.

**Test Specifications:**
**(Velocity Only)**

Firearm Used . . . . . .Thompson/Center Encore
Barrel Length . . . . . .15"
Twist . . . . . .1-10"
Groove Dia. . . . . ..3075"

**150 gr. Jacketed RN** — 2.970" OAL — **BC:** .227 **SD:** .226

| Powder | Sugg Starting Grains | Velocity fps | Pressure | Max Load Grains | Velocity fps | Pressure |
|---|---|---|---|---|---|---|
| XMR-2015 | 43.0 | 2399 | — | 48.0 | 2600 | — |
| IMR-3031 | 44.0 | 2408 | — | 49.0 | 2614 | — |
| IMR-4895 | 45.0 | 2342 | — | 49.0 | 2563 | — |
| ****SR-4759** | **30.0** | **2208** | — | 32.5 | 2341 | — |
| **XMP-5744 | 32.5 | 2030 | — | 35.5 | 2187 | — |

**170 gr. Jacketed FN** — 3.000" OAL — **BC:** .189 **SD:** .256

| Powder | Sugg Starting Grains | Velocity fps | Pressure | Max Load Grains | Velocity fps | Pressure |
|---|---|---|---|---|---|---|
| IMR-3031 | 41.0 | 2180 | — | 46.0 | 2392 | — |
| AA2460 | 42.0 | 2221 | — | 46.5 | 2350 | — |
| IMR-4895 | 42.0 | 2139 | — | 47.0 | 2414 | — |
| 748 | 44.0 | 2208 | — | 49.0 | 2308 | — |
| **SR-4759 | 27.0 | 1937 | — | 31.5 | 2179 | — |
| ****XMP-5744** | **30.5** | **1875** | — | 34.0 | 2058 | — |

**Note:** Loads shown in shaded panels are maximum.
Loads shown in bold designate potentially most accurate load.
**Designates a reduced load.

# 30-06 Springfield

**#311359**
115 gr. (#2 Alloy) 2.909" OAL
**BC:** .181
**SD:** .173

| Powder | Sugg Starting Grains | Velocity fps | Pressure | Max Load Grains | Velocity fps | Pressure |
|---|---|---|---|---|---|---|
| Green Dot | 13.0 | 1654 | — | 16.0 | 1861 | — |
| **Unique** | 14.0 | 1720 | — | **19.0** | **2021** | — |
| Herco | 14.5 | 1713 | — | 18.0 | 1931 | — |
| SR-7625 | 12.5 | 1525 | — | 16.5 | 1796 | — |
| XMP-5744 | 24.0 | 1678 | — | 32.0 | 2146 | — |

**#311672**
160 gr. (#2 Alloy) 3.050" OAL
**BC:** .245
**SD:** .241

| Powder | Sugg Starting Grains | Velocity fps | Pressure | Max Load Grains | Velocity fps | Pressure |
|---|---|---|---|---|---|---|
| Unique | 18.0 | 1773 | — | 24.0 | 2074 | — |
| **SR-4759** | 25.0 | 1892 | — | **33.0** | **2272** | — |
| XMP-5744 | 26.0 | 1689 | — | 35.0 | 2130 | — |
| IMR-4198 | 27.0 | 1696 | — | 37.0 | 2206 | — |
| RX7 | 28.0 | 1660 | — | 38.0 | 2173 | — |

**#311644**
190 gr. (#2 Alloy) 3.075" OAL
**BC:** .272
**SD:** .286

| Powder | Sugg Starting Grains | Velocity fps | Pressure | Max Load Grains | Velocity fps | Pressure |
|---|---|---|---|---|---|---|
| Unique | 13.0 | 1373 | — | 17.2 | 1615 | — |
| SR-4756 | 13.5 | 1335 | — | 17.0 | 1534 | — |
| **SR-4759** | 23.0 | 1691 | — | **28.0** | **1939** | — |
| XMP-5744 | 27.0 | 1675 | — | 37.0 | 2179 | — |
| RX7 | 22.0 | 1358 | — | 38.0 | 2229 | — |

**Note:** Loads shown in shaded panels are maximum.
Loads shown in bold designate potentially most accurate load.
* Designates a reduced load.

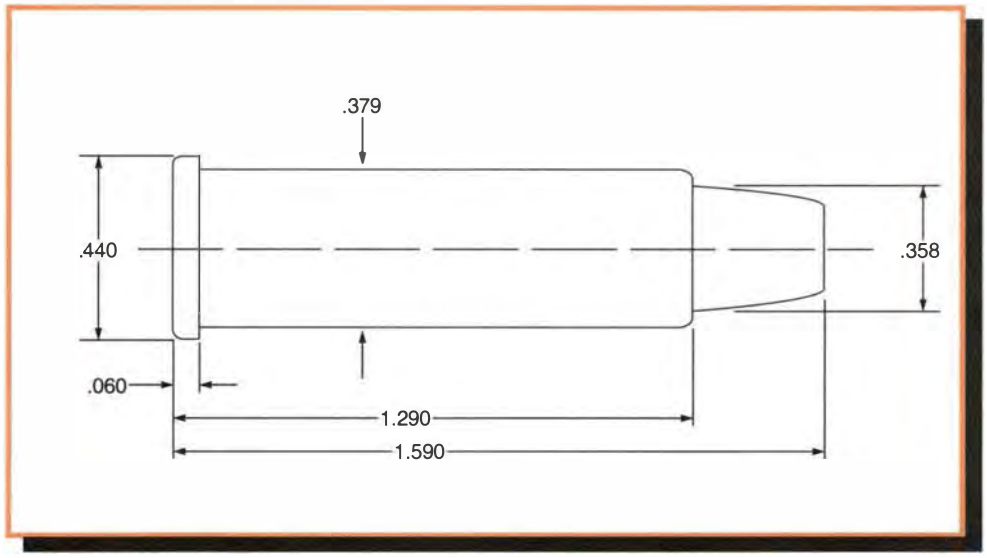


**Comments:**

Lacking the cylinder gap of a revolver, the Contender pistol will deliver higher velocity from identical barrel length.

Do not use 357 Magnum Loads in 38 Special cases as very dangerous pressure will result.

Bullet #358156 is extremely popular for heavy loads. Bullet #358156 closely duplicates the factory 158 grain semi-wadcutter. This is the Elmer Keith design bullet and makes an excellent choice for hunting.

Heavy loads work well with a wide range of powders but you might want to try 2400 for your first accuracy tests. Bullets may be seated in tune with the individual Contenders rifling since there is no other constraint with regard to maximum overall cartridge length.

**Test Components:**

Cases . . . . . .Federal
Trim-to Length . . . . . .1.280"
Primers . . . . . .CCI 550
Primer Size . . . . . .Small Pistol, Magnum
Lyman Shell Holder . . . . . .No. 1
Jacketed Bullets Used . . . . . .
Hornady HP/XTP #35700,110 gr.
Hornady HP/XTP #35710, 125 gr.
Speer JHP -SWC #4205, 146 gr.
Sierra JSP #8340, 158 gr.
Hornady JTC-SIL, #35771, 180 gr.
Cast Bullets Used . . . . . .(sized to .357" dia)
*gas check bullet #356242, 120 gr.
*#358156, 155 gr.
#358429, 170 gr.
*#358315, 205 gr.

**Test Specifications: (Velocity Only)**

Firearm Used . . . . . .Thompson/Center Contender
Barrel Length . . . . . .10"
Twist . . . . . .1-18"
Groove Dia. . . . . .356"

**110 gr. Jacketed HP**
1.590" OAL
**BC:** .131
**SD:** .123

| Powder | Sugg Starting Grains | Velocity fps | Pressure | Max Load Grains | Velocity fps | Pressure |
|---|---|---|---|---|---|---|
| Unique | 7.4 | 1334 | — | 10.0 | 1737 | — |
| AA#5 | 11.0 | 1832 | — | 13.0 | 2079 | — |
| Blue Dot | 10.0 | 1342 | — | 14.6 | 1968 | — |
| 2400 | 13.5 | 1427 | — | 20.3+ | 1952 | — |
| **IMR-4227** | 14.8 | 1446 | — | **19.5+** | **1733** | — |

**125 gr. Jacketed HP**
1.590" OAL
**BC:** .151
**SD:** .140

| Powder | Sugg Starting Grains | Velocity fps | Pressure | Max Load Grains | Velocity fps | Pressure |
|---|---|---|---|---|---|---|
| Unique | 7.0 | 1261 | — | 9.7 | 1643 | — |
| AA#5 | 10.6+ | 1525 | — | 11.8 | 1704 | — |
| Blue Dot | 10.4 | 1355 | — | 13.3 | 1807 | — |
| N110 | 14.5 | 1346 | — | 17.5 | 1801 | — |
| 2400 | 13.0 | 1302 | — | 17.7 | 1778 | — |
| H-110 | 21.0 | 1907 | — | 22.0 | 2019 | — |
| **IMR-4227** | 15.6 | 1435 | — | **19.5+** | **1749** | — |

**Note:** Loads shown in shaded panels are maximum.
Loads shown in bold designate potentially most accurate load.
+ Designates a compressed powder charge.

# 357 Magnum

**146 gr. Jacketed HP**
1.590" OAL
**BC:** .159
**SD:** .164

| Powder | Sugg Starting Grains | Velocity fps | Pressure | Max Load Grains | Velocity fps | Pressure |
|---|---|---|---|---|---|---|
| Unique | 6.3 | 1108 | — | 8.1 | 1416 | — |
| AA#5 | 9.5 | 1364 | — | 10.6 | 1507 | — |
| Blue Dot | 9.5 | 1335 | — | 11.5 | 1580 | — |
| AA#7 | 10.8 | 1277 | — | 12.0 | 1497 | — |
| N110 | 14.5 | 1509 | — | 16.0 | 1683 | — |
| 2400 | 11.0 | 1183 | — | 15.0 | 1546 | — |
| **IMR-4227** | 14.4 | 1167 | — | **16.0** | **1355** | — |

**158 gr. Jacketed SP**
1.590" OAL
**BC:** .161
**SD:** .177

| Powder | Sugg Starting Grains | Velocity fps | Pressure | Max Load Grains | Velocity fps | Pressure |
|---|---|---|---|---|---|---|
| Unique | 6.4 | 1102 | — | 8.3 | 1378 | — |
| Blue Dot | 9.6 | 1283 | — | 10.7 | 1441 | — |
| AA#9 | 13.4 | 1484 | — | 14.9 | 1626 | — |
| **2400** | 11.3 | 1093 | — | **14.9** | **1491** | — |
| H-110 | 16.3 | 1522 | — | 16.7 | 1540 | — |
| IMR-4227 | 12.2 | 1130 | — | 16.1 | 1430 | — |

**180 gr. Jacketed SIL**
1.585" OAL
**BC:** .230
**SD:** .202

| Powder | Sugg Starting Grains | Velocity fps | Pressure | Max Load Grains | Velocity fps | Pressure |
|---|---|---|---|---|---|---|
| Blue Dot | 8.4 | 1140 | — | 9.4 | 1316 | — |
| **AA#9** | 11.2 | 1225 | — | **12.5** | **1394** | — |
| 2400 | 10.0 | 1129 | — | 12.6 | 1412 | — |
| H-110 | 13.9 | 1305 | — | 14.5 | 1389 | — |
| IMR-4227 | 11.7 | 1093 | — | 14.6 | 1383 | — |

**#356242**
120 gr. (#2 Alloy) 1.640" OAL
**BC:** .154
**SD:** .135

| Powder | Sugg Starting Grains | Velocity fps | Pressure | Max Load Grains | Velocity fps | Pressure |
|---|---|---|---|---|---|---|
| **Unique** | 6.9 | 1241 | — | **9.1** | **1580** | — |
| Power Pistol | 9.9 | 1685 | — | 11.0 | 1795 | — |
| AA#5 | 8.6 | 1481 | — | 10.8 | 1771 | — |
| HS-6 | 10.8 | 1376 | — | 12.0 | 1657 | — |
| 2400 | 13.0 | 1381 | — | 16.4 | 1669 | — |

**#358156**
155 gr. (#2 Alloy) 1.578" OAL
**BC:** .213
**SD:** .174

| Powder | Sugg Starting Grains | Velocity fps | Pressure | Max Load Grains | Velocity fps | Pressure |
|---|---|---|---|---|---|---|
| HS-6 | 8.8 | 1280 | — | 9.7 | 1382 | — |
| Blue Dot | 8.5 | 1187 | — | 10.5 | 1443 | — |
| AA#7 | 10.8 | 1357 | — | 12.0 | 1516 | — |
| **2400** | 10.6 | 1138 | — | **14.0** | **1466** | — |
| AA#9 | 13.0 | 1505 | — | 14.5 | 1604 | — |
| H110 | 15.0 | 1485 | — | 15.7 | 1508 | — |

**#358429**
170 gr. (#2 Alloy) 1.647" OAL
**BC:** .286
**SD:** .190

| Powder | Sugg Starting Grains | Velocity fps | Pressure | Max Load Grains | Velocity fps | Pressure |
|---|---|---|---|---|---|---|
| Blue Dot | 8.3 | 1141 | — | 10.0 | 1368 | — |
| **2400** | 9.7 | 998 | — | **13.5** | **1422** | — |
| N110 | 12.3 | 1305 | — | 13.7 | 1503 | — |
| AA#9 | 11.7 | 1323 | — | 13.0 | 1492 | — |
| H-110 | 14.4 | 1368 | — | 15.0 | 1469 | — |

**#358315**
204 gr. (#2 Alloy) 1.880" OAL
**BC:** .165
**SD:** .229

| Powder | Sugg Starting Grains | Velocity fps | Pressure | Max Load Grains | Velocity fps | Pressure |
|---|---|---|---|---|---|---|
| Blue Dot | 9.0 | 1225 | — | 11.0 | 1410 | — |
| 2400 | 12.0 | 1318 | — | 14.5 | 1490 | — |
| **H-110** | 15.8 | 1442 | — | **16.5** | **1515** | — |

**Note:** Loads shown in shaded panels are maximum.
Loads shown in bold designate potentially most accurate load.

# 44 Remington Magnum

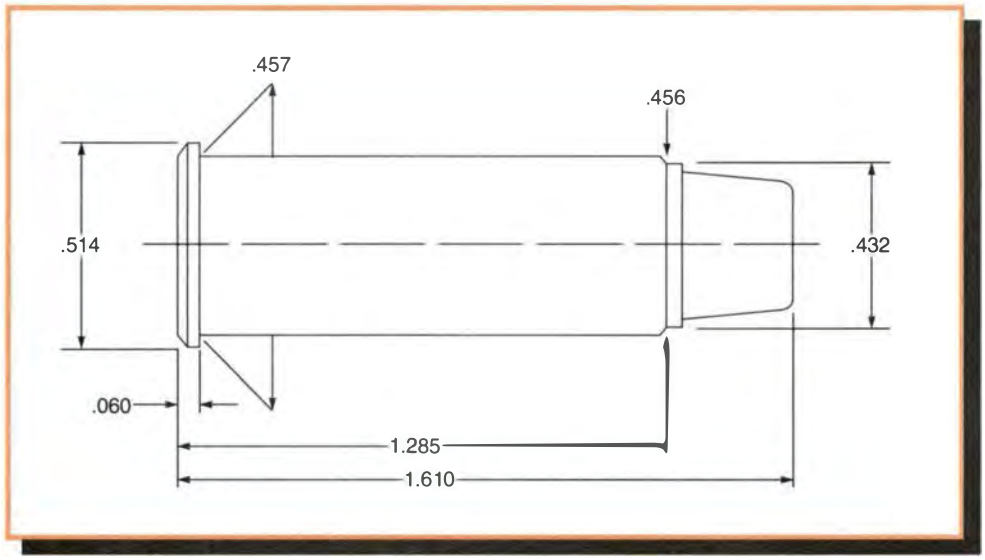


**Comments:**

This is one of the more popular Contender cartridges and it will fill a broad range of applications.

Bullet #429215 is extremely popular. However, all cast bullets designs generally work well.

IMR 4227 and Alliant 2400 are suggested for combining maximum accuracy with full power loads.

**Test Components:**

Cases . . . . . .Remington
Trim-to Length . . . . . .1.275"
Primers . . . . . .CCI 300 & 350
Primer Size . . . . . .Large Pistol, Std. & Magnum
Lyman Shell Holder . . . . . .No. 7
Jacketed Bullets Used . . . . .Sierra HC #8600, 180 gr.
Hornady HP/XTP #44100, 200 gr.
Sierra JHC #8610, 240 gr.
Hornady FP #4300, 265 gr.
Sierra SP #8630, 300 gr.
Cast Bullets Used . . . . . .(sized to .430" dia)
*gas check bullet *#429215, 210 gr.
*#429244, 255 gr.
*#429650, 300 gr.

**Test Specifications:**
**(Velocity Only)**

Firearm Used . . . . . .Thompson/Center Contender
Barrel Length . . . . . .10" and 14"
Twist . . . . . .1-22"
Groove Dia. . . . . .430"

**180 gr. Jacketed HC**
1.610" OAL
**BC:** .130
**SD:** .139

| Powder | Sugg Starting Grains | 10" Bbl. Velocity fps | 14" Bbl. Velocity fps | Max Load Grains | 10" Bbl. Velocity fps | 14" Bbl. Pressure fps |
|---|---|---|---|---|---|---|
| Unique | 12.0 | 1474 | 1505 | 13.6 | 1634 | 1679 |
| AA#5 | 12.8 | 1448 | 1497 | 16.0 | 1744 | 1835 |
| Blue Dot | 17.8 | 1570 | 1639 | 20.2 | 1770 | 1823 |
| 2400 | 21.3 | 1424 | 1481 | 25.5 | 1683 | 1773 |
| ***H-110** | 29.0 | 1719 | 1859 | **30.0+** | **1952** | **2098** |
| IMR-4227 | 24.2 | 1437 | 1503 | 27.0 | 1633 | 1741 |

**200 gr. Jacketed HP**
1.610" OAL
**BC:** .170
**SD:** .155

| Powder | Sugg Starting Grains | 10" Bbl. Velocity fps | 14" Bbl. Velocity fps | Max Load Grains | 10" Bbl. Velocity fps | 14" Bbl. Pressure fps |
|---|---|---|---|---|---|---|
| Unique | 10.5 | 1280 | 1321 | 13.0 | 1498 | 1567 |
| 800X | 12.0 | 1412 | 1488 | 14.9 | 1646 | 1702 |
| Blue Dot | 15.7 | 1388 | 1421 | 18.7 | 1608 | 1691 |
| AA#7 | 18.0 | 1503 | 1524 | 20.0 | 1678 | 1706 |
| **2400** | 19.5 | 1324 | 1444 | **23.6** | **1562** | **1656** |
| *H-110 | 27.7 | 1807 | 1894 | 28.8 | 1876 | 1991 |
| IMR-4227 | 22.8 | 1353 | 1446 | 26.4 | 1630 | 1709 |

**Note:** Loads shown in shaded panels are maximum.
Loads shown in bold designate potentially most accurate load.
* Designates the use of a magnum primer.

# 44 Remington Magnum

**240 gr. Jacketed HC**
1.610" OAL
**BC:** .185
**SD:** .186

| Powder | Sugg Starting Grains | 10" Bbl. Velocity fps | 14" Bbl. Velocity fps | Max Load Grains | 10" Bbl. Velocity fps | 14" Bbl. Velocity fps |
|---|---|---|---|---|---|---|
| Unique | 10.3 | 1202 | 1259 | 11.5 | 1247 | 1386 |
| Blue Dot | 13.4 | 1248 | 1287 | 14.9 | 1400 | 1466 |
| **2400** | 17.5 | 1304 | 1364 | **19.5** | **1469** | **1512** |
| *H-110 | 22.5 | 1509 | 1561 | 23.5 | 1554 | 1644 |
| IMR-4227 | 19.3 | 1160 | 1212 | 23.1 | 1413 | 1511 |

**265 gr. Jacketed FP**
1.650" OAL
**BC:** .189
**SD:** .205

| Powder | Sugg Starting Grains | 10" Bbl. Velocity fps | 14" Bbl. Velocity fps | Max Load Grains | 10" Bbl. Velocity fps | 14" Bbl. Velocity fps |
|---|---|---|---|---|---|---|
| Unique | 8.0 | 920 | 963 | 11.5 | 1255 | 1320 |
| 800X | 10.7 | 1181 | 1248 | 13.4 | 1375 | 1436 |
| Blue Dot | 12.6 | 1151 | 1172 | 14.0 | 1290 | 1313 |
| N110 | 16.6 | 1224 | 1252 | 18.5 | 1360 | 1398 |
| **2400** | 16.5 | 1228 | 1256 | **18.3** | **1359** | **1396** |
| AA#9 | 18.0 | 1336 | 1377 | 21.3 | 1516 | 1583 |
| ***H-110** | **20.5** | **1368** | **1413** | 21.5 | 1439 | 1478 |
| IMR-4227 | 17.5 | 1015 | 1037 | 22.0 | 1361 | 1387 |

**300 gr. Jacketed SP**
1.720" OAL
**BC:** .230
**SD:** .232

| Powder | Sugg Starting Grains | 10" Bbl. Velocity fps | 14" Bbl. Velocity fps | Max Load Grains | 10" Bbl. Velocity fps | 14" Bbl. Velocity fps |
|---|---|---|---|---|---|---|
| Blue Dot | 12.4 | 1103 | 1067 | 13.5 | 1226 | 1231 |
| **2400** | 15.7 | 1142 | 1137 | **17.5** | **1244** | **1270** |
| AA#9 | 17.5 | 1239 | 1243 | 19.3 | 1351 | 1370 |
| *H-110 | 19.5 | 1293 | 1298 | 20.5 | 1361 | 1395 |
| IMR-4227 | 18.5 | 1160 | 1169 | 21.0 | 1373 | 1448 |

**#429215**
210 gr. (#2 Alloy) 1.645" OAL
**BC:** .188
**SD:** .162

| Powder | Sugg Starting Grains | 10" Bbl. Velocity fps | 14" Bbl. Velocity fps | Max Load Grains | 10" Bbl. Velocity fps | 14" Bbl. Velocity fps |
|---|---|---|---|---|---|---|
| Unique | 10.0 | 1263 | 1323 | 13.2 | 1543 | 1624 |
| 800X | 12.0 | 1426 | 1499 | 15.1 | 1639 | 1747 |
| AA#7 | 17.2 | 1405 | 1506 | 19.2 | 1549 | 1679 |
| Blue Dot | 14.9 | 1372 | 1443 | 16.6 | 1553 | 1679 |
| N110 | 19.3 | 1398 | 1542 | 21.5 | 1552 | 1681 |
| **2400** | 19.8 | 1479 | 1524 | **22.0** | **1600** | **1720** |
| IMR-4227 | 21.8 | 1314 | 1403 | 25.5+ | 1569 | 1680 |

**#429244**
255 gr. (#2 Alloy) 1.680" OAL
**BC:** .201
**SD:** .197

| Powder | Sugg Starting Grains | 10" Bbl. Velocity fps | 14" Bbl. Velocity fps | Max Load Grains | 10" Bbl. Velocity fps | 14" Bbl. Velocity fps |
|---|---|---|---|---|---|---|
| Unique | 8.9 | 1111 | 1155 | 12.1 | 1360 | 1434 |
| 800X | 10.6 | 1282 | 1325 | 13.2 | 1488 | 1546 |
| Blue Dot | 14.0 | 1255 | 1304 | 17.4 | 1494 | 1575 |
| **2400** | 18.0 | 1252 | 1327 | **20.0** | **1529** | **1604** |
| AA#9 | 17.5 | 1337 | 1430 | 21.7 | 1544 | 1645 |
| *H-110 | 21.8 | 1408 | 1545 | 22.8 | 1478 | 1594 |
| IMR-4227 | 20.2 | 1227 | 1322 | 24.0 | 1497 | 1575 |

**#429650**
300 gr. (#2 Alloy) 1.700" OAL
**BC:** .165
**SD:** .232

| Powder | Sugg Starting Grains | 10" Bbl. Velocity fps | 14" Bbl. Velocity fps | Max Load Grains | 10" Bbl. Velocity fps | 14" Bbl. Velocity fps |
|---|---|---|---|---|---|---|
| Herco | 8.1 | 968 | 1012 | 9.0 | 1033 | 1095 |
| Blue Dot | 10.5 | 1032 | 1089 | 11.7 | 1128 | 1201 |
| **2400** | **14.0** | **1110** | **1188** | 15.7 | 1229 | 1299 |
| AA#9 | 15.3 | 1213 | 1289 | 18.0 | 1366 | 1414 |
| IMR-4227 | 16.5 | 1117 | 1185 | 19.0+ | 1299 | 1356 |

**Note:** Loads shown in shaded panels are maximum.
Loads shown in bold designate potentially most accurate load.
+ Designates a compressed powder charge.
* Designates the use of a magnum primer.

# 45 Colt

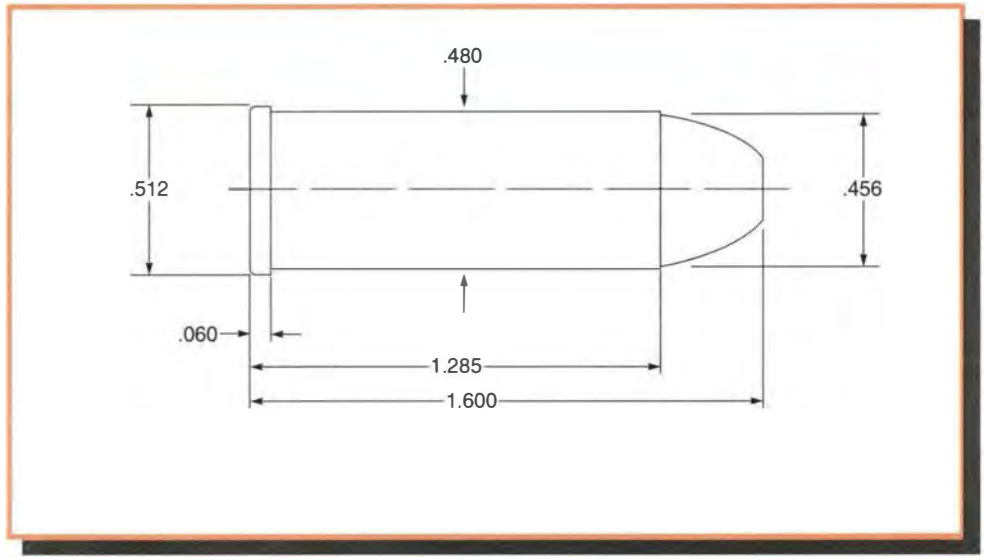


## Comments:

Shooters must be careful in regard to this cartridges small diameter rim. The rim may tear off if excessive force is applied during the reloading process. Unique is a long time favorite for loading the 45 Colt, especially with cast bullets. Data fired through the 15-inch Encore barrel showed little or no velocity gain compared to the 10-inch Contender barrel due to the long chamber configuration to accommodate the 410 shotgun shell. **Shooters using the 15-inch 45 Colt/410 barrel must remove the internal choke before firing 45 Colt ammunition.** Bullet #452424 is the Elmer Keith design and has proven very popular over the years.

## Test Components:

Cases . . . . . .Winchester
Trim-to Length . . . . . .1.275"
Primers . . . . . .Winchester WLP
Primer Size . . . . . .Large Pistol
Lyman Shell Holder . . . . . .No. 11
Jacketed Bullets Used .Speer Gold Dot #4478, 200 gr.
Sierra JHC #8820, 240 gr.
Hornady HP/XTP #45200, 250 gr.
Cast Bullets Used . . . . . .(sized to .452" dia)
*gas check bullet #452424, 255 gr.
*#452651, 325 gr.

## Test Specifications: (Velocity Only)

Firearm Used .Thompson/Center Contender and Encore
Barrel Length . . . . . .10"-Contender and 15" Encore
Twist . . . . . .1-24" Contender and 1-16" Encore
Groove Dia. . . . . .452"

**200 gr. Jacketed HP** — 1.580" OAL — **BC:** .138 **SD:** .140

| Powder | Sugg Starting Grains | 10" Bbl. Velocity fps | 15" Bbl. Velocity fps | Max Load Grains | 10" Bbl. Velocity fps | 15" Bbl. Velocity fps |
|---|---|---|---|---|---|---|
| Unique | 11.2 | 1279 | 1169 | 12.2 | 1391 | 1231 |
| Blue Dot | 12.8 | 1030 | 855 | 15.8 | 1305 | 1087 |
| **2400** | 19.0 | 1161 | 1029 | **21.5** | **1366** | **1502** |
| IMR-4227 | 18.8 | 1080 | 855 | 23.5 | 1341 | 1099 |

**240 gr. Jacketed HC** — 1.580" OAL — **BC:** .150 **SD:** .168

| Powder | Sugg Starting Grains | 10" Bbl. Velocity fps | 15" Bbl. Velocity fps | Max Load Grains | 10" Bbl. Velocity fps | 15" Bbl. Velocity fps |
|---|---|---|---|---|---|---|
| **Unique** | 9.5 | 1096 | 1055 | **12.5** | **1354** | **1378** |
| Blue Dot | 11.8 | 973 | 754 | 14.8 | 1214 | 1127 |
| 2400 | 18.5 | 1155 | 1207 | 23.0 | 1472 | 1483 |
| IMR-4227 | 20.5 | 1179 | 1061 | 25.0 | 1453 | 1325 |

**Note:** Loads shown in shaded panels are maximum.
Loads shown in bold designate potentially most accurate load.

# 45 Colt

**250 gr. Jacketed HP**
1.590" OAL
**BC:** .146
**SD:** .175

| Powder | Sugg Starting Grains | 10" Bbl. Velocity fps | 15" Bbl. Velocity fps | Max Load Grains | 10" Bbl. Velocity fps | 15" Bbl. Velocity fps |
|---|---|---|---|---|---|---|
| **Unique** | 9.3 | 1027 | 966 | **12.2** | **1324** | **1285** |
| Blue Dot | 12.0 | 946 | 796 | 14.5 | 1154 | 1016 |
| 2400 | 17.5 | 1060 | 1065 | 22.0 | 1410 | 1428 |
| IMR-4227 | 20.3 | 1196 | 971 | 24.0 | 1362 | 1159 |

**#452424**
255 gr. (#2 Alloy) 1.630" OAL
**BC:** .210
**SD:** .178

| Powder | Sugg Starting Grains | 10" Bbl. Velocity fps | 15" Bbl. Velocity fps | Max Load Grains | 10" Bbl. Velocity fps | 15" Bbl. Velocity fps |
|---|---|---|---|---|---|---|
| **700X** | 6.3 | 955 | 890 | **8.0** | **1127** | **1073** |
| Red Dot | 6.5 | 917 | 890 | 8.3 | 1055 | 1071 |
| Unique | 8.5 | 1013 | 946 | 10.2 | 1162 | 1105 |
| SR-7625 | 8.0 | 984 | 804 | 9.7 | 1153 | 938 |

**#452651**
325 gr. (#2 Alloy) 1.585" OAL
**BC:** .191
**SD:** .210

| Powder | Sugg Starting Grains | 10" Bbl. Velocity fps | 15" Bbl. Velocity fps | Max Load Grains | 10" Bbl. Velocity fps | 15" Bbl. Velocity fps |
|---|---|---|---|---|---|---|
| 700X | 5.5 | 632 | 790 | 6.7 | 768 | 901 |
| Red Dot | 5.5 | 600 | 769 | 6.9 | 763 | 902 |
| **Unique** | 6.5 | 655 | 792 | **8.5** | **900** | **978** |
| SR-7625 | 7.0 | 722 | 781 | 8.2 | 841 | 895 |

**Note:** Loads shown in shaded panels are maximum.
Loads shown in bold designate potentially most accurate load.

# 454 Casull

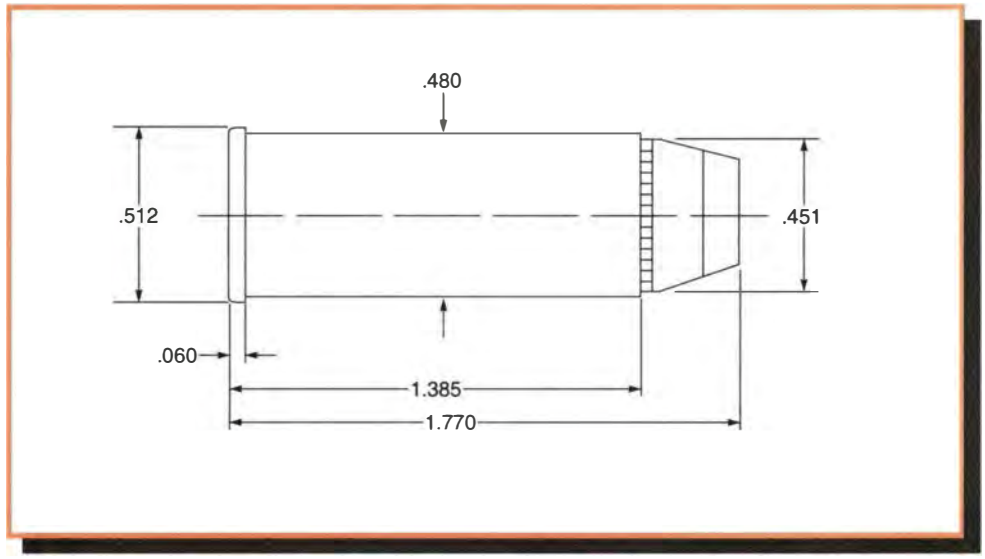


**Comments:**

Shooters who like the 44 Remington Magnum should love the 454 Casull. The following data was worked up in a pressure barrel and fired through a Thompson/Center Encore for velocity readings. This provided on average an increase of 50 to 150 feet per second. Cast bullets should be produced from linotype or its equivalent. Refer to the 454 Casull data in the previous section for additional information.

**Test Components:**

Cases . . . . . .Freedom Arms
Trim-to Length . . . . . .1.380"
Primers . . . . . .CCI 450
Primer Size . . . . . .Small Rifle, Magnum
Lyman Shell Holder . . . . . .No. 11
Jacketed Bullets Used . . . . .Speer HP #4479, 225 gr.
Hornady HP/XTP #45200, 250 gr.
Hornady HP/XTP #45230, 300 gr.
Cast Bullets Used . . . . . .(sized to .451" dia)
*gas check bullet *#452490, 255 gr.
*#452651, 325 gr.

**Test Specifications:**
**(Velocity Only)**

Firearm Used . . . . . .Thompson/Center Encore
Barrel Length . . . . . .12"
Twist . . . . . .1-16"
Groove Dia. . . . . .451"

**225 gr. Jacketed HP**
1.690" OAL
**BC:** .169
**SD:** .158

| Powder | Sugg Starting Grains | Velocity fps | Pressure | Max Load Grains | Velocity fps | Pressure |
|---|---|---|---|---|---|---|
| 2400 | 25.5 | 1653 | — | 29.5 | 1947 | — |
| AA#9 | 27.0 | 1849 | — | 31.0 | 2007 | — |
| **IMR-4227** | 29.5 | 1595 | — | **33.5+** | **1885** | — |

**250 gr. Jacketed HP**
1.690" OAL
**BC:** .146
**SD:** .175

| Powder | Sugg Starting Grains | Velocity fps | Pressure | Max Load Grains | Velocity fps | Pressure |
|---|---|---|---|---|---|---|
| 2400 | 22.0 | 1505 | — | 26.5 | 1763 | — |
| AA#9 | 24.5 | 1685 | — | 29.0 | 1944 | — |
| **IMR-4227** | 26.0 | 1399 | — | **30.5+** | **1731** | — |

**Note:** Loads shown in shaded panels are maximum.
Loads shown in bold designate potentially most accurate load.
+ Designates a compressed powder charge.

# 454 Casull

**300 gr. Jacketed HP**
1.760" OAL
**BC:** .180
**SD:** .210

| Powder | Sugg Starting Grains | Velocity fps | Pressure | Max Load Grains | Velocity fps | Pressure |
|---|---|---|---|---|---|---|
| 2400 | 20.0 | 1340 | — | 24.5 | 1589 | — |
| AA#9 | 22.0 | 1459 | — | 25.8 | 1730 | — |
| **IMR-4227** | 24.0 | 1262 | — | **28.2** | **1567** | — |

**#452490**
255 gr. (Linotype) 1.760" OAL
**BC:** .160
**SD:** .179

| Powder | Sugg Starting Grains | Velocity fps | Pressure | Max Load Grains | Velocity fps | Pressure |
|---|---|---|---|---|---|---|
| 2400 | 21.7 | 1489 | — | 27.0 | 1846 | — |
| **AA#9** | 24.5 | 1739 | — | **28.0** | **1905** | — |
| IMR-4227 | 25.8 | 1434 | — | 30.0 | 1699 | — |

**#452651**
325 gr. (Linotype) 1.755" OAL
**BC:** .191
**SD:** .211

| Powder | Sugg Starting Grains | Velocity fps | Pressure | Max Load Grains | Velocity fps | Pressure |
|---|---|---|---|---|---|---|
| 2400 | 17.0 | 1270 | — | 20.0 | 1412 | — |
| AA#9 | 18.5 | 1319 | — | 22.0 | 1589 | — |
| IMR-4227 | 20.0 | 1178 | — | 24.0 | 1407 | — |
| **AA-1680** | 24.0 | 1107 | — | **28.0** | **1382** | — |

**Note:** Loads shown in shaded panels are maximum.
Loads shown in bold designate potentially most accurate load.

# 45-70 Government

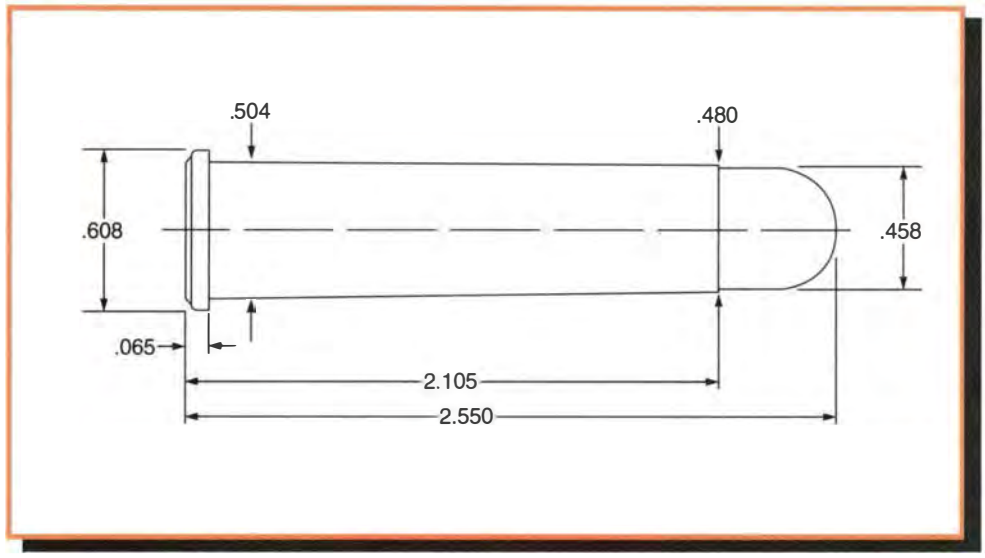


**Comments:**

This is not a cartridge for handgunners of faint heart. Recoil is very severe when shot in the T/C Contender.

Alliant 2400 and Reloder 7 are good choices.

**Test Components:**

Cases . . . . . .Remington
Trim-to Length . . . . . .2.095"
Primers . . . . . .Remington 9½
Primer Size . . . . . .Large Rifle
Lyman Shell Holder . . . . . .No. 17
Jacketed Bullets Used . . . Hornady HP #4500, 300 gr.
Speer SP #2479, 400 gr.
Cast Bullets Used . . . . . .(sized to .459" dia)
#457191, 292 gr.
#457193, 405 gr.

**Test Specifications:**
**(Velocity Only)**

Firearm Used . . . . . .Thompson/Center Contender
Barrel Length . . . . . .16"
Twist . . . . . .1-14"
Groove Dia. . . . . .458"

**300 gr. Jacketed HP** — 2.550" OAL — **BC:** .197 **SD:** .204

| Powder | Sugg Starting Grains | Velocity fps | Pressure | Max Load Grains | Velocity fps | Pressure |
|---|---|---|---|---|---|---|
| **2400** | 24.0 | 1346 | — | **30.0** | **1685** | — |
| IMR-4227 | 27.0 | 1327 | — | 32.0 | 1625 | — |
| IMR-4198 | 31.0 | 1248 | — | 36.0 | 1449 | — |
| RX7 | 33.0 | 1347 | — | 38.0 | 1600 | — |
| IMR-3031 | 38.0 | 1206 | — | 43.0 | 1410 | — |

**400 gr. Jacketed FSP** — 2.550" OAL — **BC:** .214 **SD:** .272

| Powder | Sugg Starting Grains | Velocity fps | Pressure | Max Load Grains | Velocity fps | Pressure |
|---|---|---|---|---|---|---|
| Unique | 11.0 | 746 | — | 15.0 | 1014 | — |
| 2400 | 22.0 | 1200 | — | 27.0 | 1426 | — |
| IMR-4227 | 25.0 | 1211 | — | 30.0 | 1397 | — |
| IMR-4198 | 28.0 | 1042 | — | 33.0 | 1293 | — |
| **RX7** | 29.0 | 1191 | — | **34.0** | **1354** | — |
| IMR-3031 | 34.0 | 1018 | — | 39.0 | 1283 | — |

**#457191** — 292 gr. (#2 Alloy) 2.550" OAL — **BC:** .201 **SD:** .198

| Powder | Sugg Starting Grains | Velocity fps | Pressure | Max Load Grains | Velocity fps | Pressure |
|---|---|---|---|---|---|---|
| SR-4759 | 26.0 | 932 | — | 30.0 | 1471 | — |
| **IMR-4198** | 28.5 | 1122 | — | **34.5** | **1481** | — |
| IMR-3031 | 34.0 | 961 | — | 44.0 | 1433 | — |

**#457193** — 405 gr. (#2 Alloy) 2.550" OAL — **BC:** .307 **SD:** .275

| Powder | Sugg Starting Grains | Velocity fps | Pressure | Max Load Grains | Velocity fps | Pressure |
|---|---|---|---|---|---|---|
| IMR-4198 | 21.5 | 733 | — | 28.5 | 1195 | — |
| **RX7** | 33.0 | 1386 | — | **41.0** | **1578** | — |
| IMR-3031 | 34.0 | 1061 | — | 38.5 | 1304 | — |

**Note:** Loads shown in shaded panels are maximum.
Loads shown in bold designate potentially most accurate load.

# Section 6

Appendix A . . . . . page 396

Appendix B . . . . . page 397

Appendix C . . . . . page 399

Appendix D . . . . . page 402

Reloading Records Log 1 . . . . . page 403

Reloading Records Log 2 . . . . . page 405

Notes . . . . . page 410

# Appendix A

## Bullet Type Abbreviations

BTSP: boat tail soft point

FMJ: full metal jacket

FMTBT: full metal jacket boat tail

FN: flat nose

FP: flat point

FSP: flat soft point

GDHP: Gold Dot hollow point (Speer)

GSSP: Grand Slam soft point (Speer)

HP: hollow point

HPBT: hollow point boat tail

HP/XTP: Hollow Point – Extreme Terminal Performance (Hornady)

JHC: jacketed hollow cavity

JSP: jacketed soft point

PP: Protected Point (Nosler)

SBT: spitzer boat tail

Sil: silhouette

SMP: semi-pointed

SP: soft point

Sp SP spitzer soft point

SPSX: Soft Point Super Explosive (Hornady)

SPT: spitzer

TMJ: Totally Metal Jacket (Speer)

WC: wadcutter

# Appendix B

## Useful formulas for reloaders

**Energy in foot-pounds**

$$\frac{\text{bullet weight in grains x velocity}^2}{450400} = \text{ft-lbs}$$

Example: 150gr. bullet at 2700 fps

$$\frac{150 \times 2700^2}{450400} = 2428 \text{ ft-lbs}$$

**Sectional Density**

A bullet's weight in pounds divided by the square of its diameter in inches.

$$\frac{\frac{W}{7000}}{D^2} = SD$$

Example: 150 gr. bullet, .308" in diameter

$$\frac{\frac{150}{7000}}{.308^2} = .226$$

**Sight Correction**

This formula will show how much change in inches will be needed to correctly zero your sights.

$$M = \left(\frac{D}{R}\right) \times S$$

Where M = movement in inches needed to zero sights.

D = impact deviation of bullet in inches.
(how far off from the aim point that the bullet is hitting.)
R = range in inches.
S = sight radius. (distance between sights)

Example: firearm is hitting 6" low at 50 yards.

D = 6" R = 50 x 36 = 1800" S = 20"

$$M = \frac{6''}{1800} \times 20''$$

$$M = .067''$$

.067" of sight adjustment is needed to zero firearm.

## Free Recoil Energy

Using this formula, you can calculate the amount of recoil for any given gun and load.

$$\text{Free Recoil Energy (ft-lbs)} = \frac{(W1\ Vp + 4700\ W2)^2}{64.348\ Wg}$$

Where: W1 = weight of bullet in pounds. (grains divided by 7000 equals pounds)
W2 = weight of powder charge in pounds.
Wg = weight of gun in pounds.
Vp = muzzle velocity of bullet in feet per second.

Example: W1 for a 150 gr. bullet = 150 divided by 7000 = .021
W2 for a 50 gr. charge = 50 divided by 7000 = .007
Wg for a 9 pound rifle = 9
Vp for a velocity of 2700 fps = 2700

$$\frac{(.021 \times 2700 + 4700 \times .007)^2}{64.348 \times 9}$$

$$\frac{(56.7 + 32.9)^2}{579.132} = 13.86 \text{ ft-lbs}$$

# Appendix C

## Shellholder Charts

| Rifle Cartridges | Lyman | Hornady | RCBS | Redding |
|---|---|---|---|---|
| 17 Remington | 26 | 16 | 10 | 10 |
| 22 Hornet | 4 | 3 | 12 | 14 |
| 218 Bee | 10 | 7 | 1 | 3 |
| 222 Remington | 26 | 16 | 10 | 10 |
| 223 Remington | 26 | 16 | 10 | 10 |
| 22 PPC | 3 | 6 | 32 | 12 |
| 222 Remington Mag | 26 | 16 | 10 | 10 |
| 225 Winchester | 5 | 4 | 11 | 4 |
| 224 Weatherby Mag | 3 | 1 | na | 12 |
| 22-250 Remington | 2 | 1 | 3 | 1 |
| 220 Swift | 5 | 4 | 11 | 4 |
| 6mm PPC | 3 | 6 | 32 | 12 |
| 243 Winchester | 2 | 1 | 3 | 1 |
| 6mm/244 Remington | 2 | 1 | 3 | 1 |
| 240 Weatherby Mag. | 2 | 1 | 3 | 1 |
| 25-20 Winchester | 10 | 7 | 1 | 3 |
| 250 Savage | 2 | 1 | 3 | 1 |
| 257 Roberts | 2 | 1 | 3 | 1 |
| 25-06 Remington | 2 | 1 | 3 | 1 |
| 257 Weatherby Mag. | 13 | 5 | 4 | 6 |
| 6.5x55 Swed. Mau. | 27 | 19 | 2 | 1 |
| 260 Remington | 2 | 1 | 3 | 1 |
| 264 Winchester | 13 | 5 | 4 | 6 |
| 270 Winchester | 2 | 1 | 3 | 1 |
| 270 WSM | 34 | 35 | 43 | 6 |
| 270 Weatherby Mag. | 13 | 5 | 4 | 6 |
| 7-30 Waters | 6 | 2 | 2 | 2 |
| 7mm-08 Remington | 2 | 1 | 3 | 1 |
| 7mm Mauser | 2 | 1 | 3 | 1 |
| 280 Remington | 2 | 1 | 3 | 1 |
| 284 Winchester | 2 | 1 | 3 | 1 |
| 7mm WSM | 34 | 35 | 43 | 6 |
| 7mm Rem. SAUM | 13 | 5 | 38 | 6 |
| 7mm Remington Mag | 13 | 5 | 4 | 6 |
| 7mm Weatherby Mag | 13 | 5 | 4 | 6 |
| 7mm STW | 13 | 5 | 4 | 6 |
| 7mm Rem Ultra Mag | 13 | 5 | 38 | 6 |
| 30 M1 Carbine | 19 | 22 | 17 | 22 |
| 30-30 Winchester | 6 | 2 | 2 | 2 |
| 300 Savage | 2 | 1 | 3 | 1 |
| 30-40 Krag | 7 | 11 | 7 | 8 |
| 308 Winchester | 2 | 1 | 3 | 1 |

| Rifle Cartridges | Lyman | Hornady | RCBS | Redding |
|---|---|---|---|---|
| 30-06 Springfield | 2 | 1 | 3 | 1 |
| 300 Rem SAUM | 13 | 5 | 38 | 6 |
| 300 WSM | 34 | 35 | 43 | 6 |
| 300 H&H Mag | 13 | 5 | 4 | 6 |
| 300 Winchester Mag. | 13 | 5 | 4 | 6 |
| 300 Rem Ultra Mag. | 13 | 5 | 38 | 6 |
| 300 Weatherby Mag. | 13 | 5 | 4 | 6 |
| 30-378 Wthby Mag. | 17 | 14 | 14 | 18 |
| 7.62x39 | 3 | 6 | 32 | 12 |
| 7.62x54R | 17 | 23 | 13 | 15 |
| 7.65 Arg. Mauser | 2 | 24 | 3 | 1 |
| 303 British | 7 | 11 | 7 | 8 |
| 32-20 Winchester | 10 | 7 | 1 | 3 |
| 32 Winchester Spec. | 6 | 2 | 2 | 2 |
| 8mm Mauser | 2 | 1 | 3 | 1 |
| 8mm Remington Mag | 13 | 5 | 4 | 6 |
| 338 Winchester Mag. | 13 | 5 | 4 | 6 |
| 338 Rem Ultra Mag. | 13 | 5 | 38 | 6 |
| 338/378 Wthby Mag. | 17 | 14 | 14 | 18 |
| 340 Weatherby Mag. | 13 | 5 | 4 | 6 |
| 348 Winchester | na | 25 | 5 | 20 |
| 35 Remington | 2 | 26 | 9 | 1 |
| 358 Winchester | 2 | 1 | 3 | 1 |
| 35 Whelen | 2 | 1 | 3 | 1 |
| 38-55 Winchester | 6 | 2 | 2 | 2 |
| 375 Winchester | 6 | 2 | 2 | 2 |
| 375 H&H Mag. | 13 | 5 | 4 | 6 |
| 375 Rem. Ultra Mag. | 13 | 5 | 38 | 6 |
| 378 Weatherby Mag. | 17 | 14 | 14 | 18 |
| 416 Remington Mag. | 13 | 5 | 4 | 6 |
| 416 Rigby | 17 | 38 | 37 | 18 |
| 416 Weatherby Mag. | 17 | 14 | 14 | 18 |
| 40-65 Winchester | 17 | 14 | 14 | 18 |
| 40-70 Sharps Str. | 33 | na | na | 8 |
| 44-40 Winchester | 14B | 9 | 35 | 9 |
| 444 Marlin | 14B | 27 | 28 | 19 |
| 45-70 Government | 17 | 14 | 14 | 18 |
| 450 Marlin | 13 | 5 | 4 | 6 |
| 45-90 Winchester | 17 | 14 | 14 | 18 |
| 45-100 | 17 | 14 | 14 | 18 |
| 45-110 | 17 | 14 | 4 | 18 |
| 45-120 | 17 | 14 | 14 | 18 |
| 458 Winchester Mag. | 13 | 5 | 4 | 6 |
| 460 Weatherby Mag. | 17 | 14 | 14 | 18 |
| 50-70 Government | 22 | na | 31 | na |

| Pistol Cartridges | Lyman | Hornady | RCBS | Redding |
|---|---|---|---|---|
| 25 ACP | 32 | 37 | 29 | 27 |
| 7mm T/C-U | 26 | 16 | 10 | 10 |
| 30 Luger | 12 | 8 | 16 | 13 |
| 30 Mauser | 12 | na | 16 | 13 |
| 32 ACP | 23 | 22 | 17 | 22 |
| 32 S&W Long | 9 | 36 | 23 | 10 |
| 32 H&R Mag | 9 | 36 | 23 | 10 |
| 38 S&W | 21 | 28 | 6 | 12 |
| 380 Auto | 26 | 16 | 10 | 10 |
| 9mm Luger | 12 | 8 | 16 | 13 |
| 357 Sig | 15 | 10 | 27 | 5 |
| 38 Super | 12 | 8 | 39 | 5 |
| 38 Special | 1 | 6 | 6 | 12 |
| 357 Magnum | 1 | 6 | 6 | 12 |
| 9mm Makarov | 12 | 8 | 16 | 13 |
| 40 S&W | 15 | 10 | 27 | 5 |
| 10mm Auto | 15 | 10 | 27 | 5 |
| 38-40 Winchester | 14B | 9 | 35 | 9 |
| 41 Remington Mag | 30 | 29 | 30 | 21 |
| 44 Special | 7 | 30 | 18 | 19 |
| 44 Remington Mag | 7 | 30 | 18 | 19 |
| 45 ACP | 2 | 1 | 3 | 1 |
| 45 Auto Rim | na | 31 | 8 | 17 |
| 45 Winchester Mag | 2 | 1 | 3 | 7 |
| 45 Colt | 11 | 32 | 20 | 23 |
| 454 Casull | 11 | 32 | 20 | 23 |
| 480 Ruger | 17 | 14 | 40 | na |
| 50 Action Express | 7 | 40 | 33 | na |

# Appendix D

## Relative Burn Rate Chart

Listed in order from fastest to slowest

1) R-1, Norma
2) N310, VihtaVuori
3) Bullseye, Alliant
4) Titewad, Hodgdon
5) Red Dot, Alliant
6) Clays, Hodgdon
7) 700X, IMR
8) Titegroup, Hod.
9) Amer. Select, All.
10) Solo 1000, Acc.
11) No.2 Imp., Accu.
12) Green Dot, Alliant
13) International, Hod.
14) N320, VihtaVuori
15) PB, IMR
16) WST, Winchester
17) HP-38, Hodgdon
18) 231, Winchester
19) SR-7625, IMR
20) Unique, Alliant
21) Universal, Hod.
22) N330, VihtaVuori
23) Herco, Alliant
24) No. 5, Accurate
25) WSF, Winchester
26) HS-6, Hodgdon
27) Power Pistol, All.
28) N340, VihtaVuori
29) SR-4756, IMR
30) 800X, IMR
31) N105, VihtaVuori
32) No. 7, Accurate
33) HS-7, Hodgdon
34) Blue Dot, Alliant
35) 2400, Alliant
36) No. 9, Accurate
37) N110, VihtaVuori
38) H-110, Hodgdon
39) 296, Winchester
40) SR-4759, IMR
41) N120, VihtaVuori
42) IMR-4227, IMR
43) H-4227, Hodgdon
44) N130, VihtaVuori
45) 1680, Accurate
46) Lil'Gun, Hodgdon
47) IMR-4198, IMR
48) H-4198, Hodgdon
49) N133, VihtaVuori
50) XMR-2015, Acc.
51) Reloder 7, Alliant
52) H322, Hodgdon
53) Benchmark, Hod.
54) IMR-3031, IMR
55) 2230, Accurate
56) H335, Hodgdon
57) H-4895, Hodgdon
58) IMR-4895, IMR
59) 2460, Accurate
60) BL-C(2), Hodgdon
61) XMR-2495, Acc.
62) 748, Winchester
63) N135, VihtaVuori
64) IMR-4064, IMR
65) Varget, Hodgdon
66) 2520, Accurate
67) N540, VihtaVuori
68) N140, VihtaVuori
69) Reloder 15, Alliant
70) IMR-4320, IMR
71) H380, Hodgdon
72) 2700, Accurate
73) N150, VihtaVuori
74) N550, VihtaVuori
75) 760, Winchester
76) H-414, Hodgdon
77) IMR-4350, IMR
78) H-4350, Hodgdon
79) XMR-4350, Acc.
80) N160, VihtaVuori
81) N560, VihtaVuori
82) IMR-4831, IMR
83) 3100, Accurate
84) Reloder 19, Alliant
85) H-4831, Hodgdon
86) WXR, Winchester
87) Reloder 22, Alliant
88) N165, VihtaVuori
89) Reloder 25, Alliant
90) IMR-7828, IMR
91) N170, VihtaVuori
92) H-1000, Hodgdon
93) MagPro, Accurate
94) Retumbo, Hod.
95) H50BMG, Hod.
96) H-870, Hodgdon
97) 8700, Accurate

# LYMAN RELOADING RECORDS LOG (ONE)

| Data Loaded | Caliber | Brass Brand Lot No. | Primer Brand Type Lot No. | Powder Brand Type Lot No. Charge | TImes Fired | Times Trimmed | Bullet Brand Type Weight Lot No. |
|---|---|---|---|---|---|---|---|
| | | | | | | | |
| | | | | | | | |
| | | | | | | | |
| | | | | | | | |
| | | | | | | | |
| | | | | | | | |
| | | | | | | | |
| | | | | | | | |
| | | | | | | | |
| | | | | | | | |
| | | | | | | | |
| | | | | | | | |
| | | | | | | | |
| | | | | | | | |
| | | | | | | | |
| | | | | | | | |
| | | | | | | | |
| | | | | | | | |
| | | | | | | | |
| | | | | | | | |
| | | | | | | | |
| | | | | | | | |
| | | | | | | | |
| | | | | | | | |
| | | | | | | | |
| | | | | | | | |
| | | | | | | | |
| | | | | | | | |
| | | | | | | | |
| | | | | | | | |
| | | | | | | | |
| | | | | | | | |
| | | | | | | | |
| | | | | | | | |
| | | | | | | | |
| | | | | | | | |
| | | | | | | | |
| | | | | | | | |
| | | | | | | | |
| | | | | | | | |
| | | | | | | | |
| | | | | | | | |
| | | | | | | | |
| | | | | | | | |
| | | | | | | | |
| | | | | | | | |
| | | | | | | | |
| | | | | | | | |

# LYMAN RELOADING RECORDS LOG (ONE)

| Data Loaded | Caliber | Brass Brand Lot No. | Primer Brand Type Lot No. | Powder Brand Type Lot No. Charge | Times Fired | Times Trimmed | Bullet Brand Type Weight Lot No. |
|---|---|---|---|---|---|---|---|
| | | | | | | | |
| | | | | | | | |
| | | | | | | | |
| | | | | | | | |
| | | | | | | | |
| | | | | | | | |
| | | | | | | | |
| | | | | | | | |
| | | | | | | | |
| | | | | | | | |
| | | | | | | | |
| | | | | | | | |
| | | | | | | | |
| | | | | | | | |
| | | | | | | | |
| | | | | | | | |
| | | | | | | | |
| | | | | | | | |
| | | | | | | | |
| | | | | | | | |
| | | | | | | | |
| | | | | | | | |
| | | | | | | | |
| | | | | | | | |
| | | | | | | | |
| | | | | | | | |
| | | | | | | | |
| | | | | | | | |
| | | | | | | | |
| | | | | | | | |
| | | | | | | | |
| | | | | | | | |
| | | | | | | | |
| | | | | | | | |
| | | | | | | | |
| | | | | | | | |
| | | | | | | | |
| | | | | | | | |
| | | | | | | | |
| | | | | | | | |
| | | | | | | | |
| | | | | | | | |
| | | | | | | | |
| | | | | | | | |
| | | | | | | | |
| | | | | | | | |
| | | | | | | | |
| | | | | | | | |

# LYMAN RELOADING RECORDS LOG (TWO)

| Date | Firearm | Comments |
|---|---|---|

# LYMAN RELOADING RECORDS LOG (TWO)

| Date | Firearm | Comments |
|---|---|---|

# NOTES

# NOTES

# NOTES

# NOTES

# NOTES

# Shooters are Switching to Butch's Patches

**Butch's "Triple Twill" Patches have "Drop Zones" to capture fouling!**

## Butch's "Triple Twill" Patches

Last year "Butch's Bore Shine" took the shooting market by storm. Customers told us that after trying Butch's, they will never use another bore cleaner.

We were so pleased with the success of Butch's we set out to find the perfect patch to go along with Butch's solvent and oil. Like Butch's bore shine, we wanted a better product, a patch that would hold more liquid and remove fouling faster than ordinary cotton flannel patches. By chance, we discovered Triple Twill, a fabric used by laboratories and cleanrooms. Triple Twill's special weave has hundreds of tiny "ridges and drop zones" which scrub and capture fouling residues far better than flannel patches. Butch's Triple Twill won't shed lint like other patches can. They also have been specially treated to gain the absolute maximum in liquid absorbency.

Butch's Triple Twill Patches are the highest quality patches you can buy anywhere!

**Butch's Patches the Perfect Compliment to World Famous Butch's Bore Shine!**

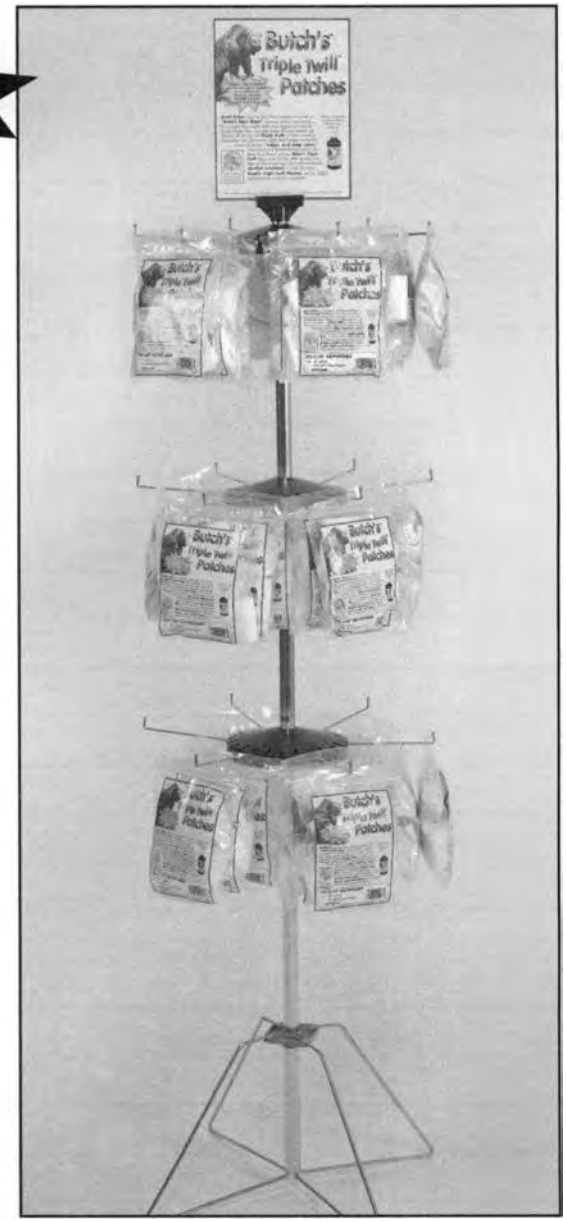


**New Dealer Profit Center! Build a Tree with Butch's Patches!**

**Butch's "Triple Twill" Patches**

| Part No. | Description | |
|---|---|---|
| #02901 | 1⅛" SQ. 22-270 Cal | (Bag of 1000) |
| #02904 | 1¾" SQ. 7mm - 35 Cal Rifle | (Bag of 750) |
| #02906 | 2¼" SQ. 38 CAL - 45 Cal Rifle<br>10mm - 45 Cal Pistol | (Bag of 500) |
| #02908 | 2½" SQ. 45-58 Cal Rifle<br>.410 - 20 Ga. Shotgun | (Bag of 375) |
| #02911 | 3" SQ. 10,12 & 16 Ga.Shotgun | (Bag of 300) |

# Butch's Gun Care Products

## The New Choice of Competitive Shooters!

**Butch Fisher - Bench Rest Competitor and originator of Butch's Gun Care Products**

Butch's
GUN CARE PRODUCTS

Butch's Gun Care Products have been developed by well known Bench Rest Competitor Butch Fisher. Always looking for a competitive edge, Butch created Bore Shine to clean his rifle faster and cleaner than any other solvent. Butch's Bore Shine was used by most competitors at this years National Bench Rest Championship. Now Butch has introduced Butch's Patches made from a special "Triple Twill" fabric that cleans and removes fouling better and faster. Triple Twill Fabric has pockets called Drop Zones that grab and remove fouling. The patches are specially treated for maximum absorption putting more solvent to work.

*Butch's Bore Shine and Triple Twill Patches... the Deadly Duo for a clean barrel!*

**Lyman Products Corp**
475 Smith Street
Middletown, CT 06457
860-632-2020 • FAX 860-632-1699
www.lymanproducts.com

**To Order Call 800-22-LYMAN**

## Butch's "Triple Twill" Patches

We were so pleased with the success of Butch's we set out to find the perfect patch to go along with Butch's solvent and oil. Like Butch's bore shine, we wanted a better product, a patch that would hold more liquid and remove fouling faster than ordinary cotton flannel patches. By chance, we discovered Triple Twill, a fabric used by laboratories and cleanrooms. Triple Twill's special weave has hundreds of tiny "ridges and drop zones" which scrub and capture fouling residues far better than flannel patches. Butch's Triple Twill won't shed lint like other patches can. They also have been specially treated to gain the absolute maximum in liquid absorbency.

**Butch's "Triple Twill" Patches**

| Part No. | Description | Price |
|---|---|---|
| #02901 | 1⅛" SQ. 22-270 Cal. (Bag of 1000) | **$11.50** |
| #02913 | 1½" SQ. 6mm Bench Rest (Bag of 1000) | **$11.50** |
| #02904 | 1¾" SQ. 7mm - 35 Cal Rifle (Bag of 750) | **$10.50** |
| #02906 | 2¼" SQ. 38 CAL - 45 Cal Rifle (Bag of 500) 10mm - 45 Cal Pistol | **$11.50** |
| #02908 | 2½" SQ. 45-58 Cal Rifle (Bag of 375) .410 - 20 Ga. Shotgun | **$10.50** |
| #02911 | 3" SQ. 10,12 & 16 Ga. (Bag of 300) Shotgun | **$8.75** |

Butch's Gun Care Products are distributed exclusively by Lyman Products Corp. If you would like more information on Butch's products or want us to recommend a distributor that carries Butch's call 1-800-22-Lyman.

# New Products for Shooters from Lyman and Pachmayr

## Lyman Electronic Scale Funnel Pan

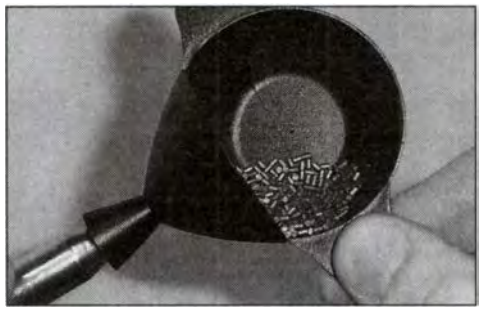

Pour directly from the Funnel Pan into the case! Saves time. Combines 2 steps into one. (See Order Form)

## Lyman Electronic Digital Trigger Pull Gauge

State of the art technology makes this the fastest and most accurate gauge on the market! Accuracy to 1/10 ounce over working range of 0 to 12 pounds.

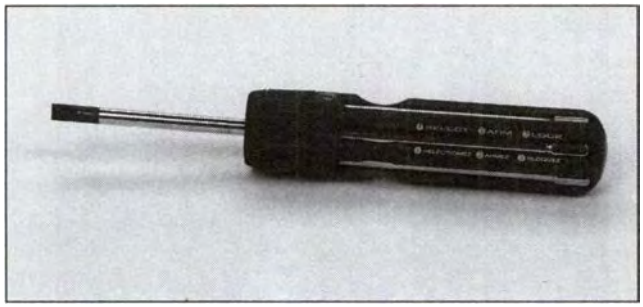

## Pachmayr 1911 Tool Kit

A true All-in-One Tool Kit for 1911 or similar style guns. Change blades quickly with a turn of the dial! 1911 Tool Kit includes:

- 5/32" Pin Punch
- .150" Small Screwdriver
- .325" Large Screwdriver
- 5/32"Hex Drive
- .210" Medium Screwdriver
- 3/32" Hex Drive

## Lyman Shooters Eyeglass Diopter

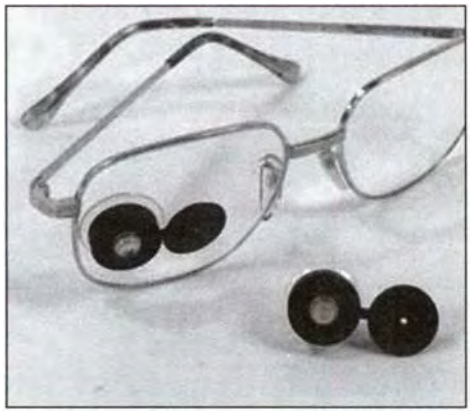

Instantly improves eye focus for shooters with prescription glasses. Eliminates target fuzzing and distortion. (See Order Form)

## Pachmayr Master Gunsmith 10 Piece Screwdriver Set

10 classic screwdrivers designed specifically for gunsmiths and firearms enthusiasts. Magnetized with rubber coated handle with "caddy". Tips are magnetized and parallel ground. They are the exact size to fit all Colt, S&W, Ruger pistols and revolver screws. Torx bits are included for all scope rings and bases.
(See Order Form)

Pachmayr

Over 130 Sizes

# A-ZOOM®

## Precision Metal Snap-Caps

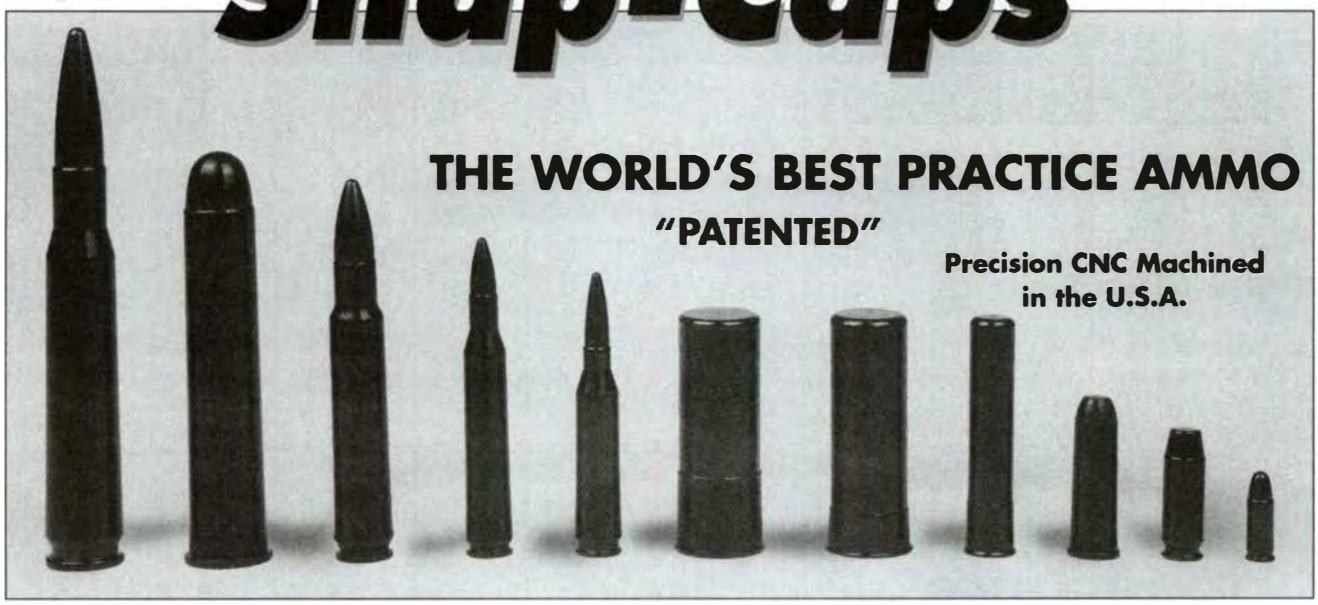


## Rifle • Shotgun • Pistol • Revolver

**A-Zoom Practice Ammo Rounds are much more than conventional snap-caps. A-Zoom metal snap-caps are precision CNC machined from solid aluminum to exact size, then hard anodized. This hard anodized surface provides for ultra-smooth functioning and long cycling life. The highly durable dry fire "Dead Cap" can take over three thousand dry fires while protecting the firing pin. Our product lasts over 30 times longer than conventional plastic snap-caps. A-Zoom Snap Caps are available in over 130 sizes from 50BMG to 22 Hornet.**

**Teach or Learn Safe Gun Handling**

**Dry Fire Thousands of Times without Damage**

**Handles just like Real Ammo**

**Totally Safe Eliminate Unnecessary Risk!**

**Tough Solid Aluminum Construction**

**Ideal for Training, Storage, Function Testing, Cowboy Action**

Pachmayr

Pachmayr is a division of Lyman Products, 475 Smith Street, Middletown, CT 06457
For info on or to order A-Zoom Practice Ammunition call 1-800-423-9704 or 1-860-632-2020
Fax 1-860-632-1699

# Pachmayr® A-ZOOM®

## Precision Metal Snap-Caps

## THE WORLD'S BEST PRACTICE AMMO!

| ITEM # | DESCRIPTION | PACK | RETAIL |
|---|---|---|---|
| | **SHOTGUN** | | |
| * 12210 | 10 GAUGE | 2 | 9.98 |
| * 12211 | 12 GAUGE | 2 | 9.98 |
| * 12212 | 16 GAUGE | 2 | 9.98 |
| * 12213 | 20 GAUGE | 2 | 9.98 |
| * 12214 | 28 GAUGE | 2 | 9.98 |
| * 12215 | 410 GAUGE | 2 | 9.98 |
| | **REVOLVER** | | |
| 16130 | 32 H & R | 6 | 19.98 |
| 16137 | 32 H & R Mag | 6 | 19.98 |
| 16160 | 32 S & W Short | 6 | 20.98 |
| 16135 | 32 S & W Long | 6 | 19.98 |
| 16112 | 32-20 Win | 6 | 20.98 |
| * 16119 | 357 Magnum | 6 | 18.98 |
| 16131 | 38 Blank | 6 | 20.98 |
| 16125 | 38 S & W | 6 | 19.98 |
| * 16118 | 38 Special | 6 | 18.98 |
| 16128 | 38-40 Win | 6 | 19.98 |
| 16127 | 41 Magnum | 6 | 19.98 |
| 16141 | 44 Colt | 6 | 20.98 |
| * 16120 | 44 Magnum | 6 | 18.98 |
| 16140 | 44 Russian | 6 | 20.98 |
| * 16121 | 44 Special | 6 | 18.98 |
| * 16123 | 44-40 Win | 6 | 18.98 |
| * 16124 | 45 Colt | 6 | 18.98 |
| 16126 | 454 Casull | 6 | 19.98 |
| 16136 | 455 Webley | 6 | 19.98 |
| 16146 | 480 Ruger | 6 | 19.98 |
| 16144 | 500 S&W | 6 | 19.98 |
| | **PISTOL** | | |
| * 15117 | 10mm Auto | 5 | 15.98 |
| * 15152 | 25 Auto | 5 | 15.98 |
| * 15153 | 32 Auto | 5 | 15.98 |
| * 15159 | 357 Sig | 5 | 15.98 |
| 15158 | 38 Super | 5 | 15.98 |
| * 15113 | 380 Auto | 5 | 15.98 |
| * 15114 | 40 S&W | 5 | 15.98 |
| 15138 | 40 Super | 5 | 17.98 |
| 15134 | 400 Cor Bon | 5 | 16.98 |
| 15150 | 41 AE | 5 | 17.98 |
| * 15115 | 45 Auto | 5 | 15.98 |
| 15155 | 45 Magnum | 5 | 17.98 |
| 15151 | 50 AE | 5 | 16.98 |
| 15133 | 7.62 Tokarev | 5 | 16.98 |
| 15129 | 7.63 Mauser | 5 | 16.98 |

| ITEM # | DESCRIPTION | PACK | RETAIL |
|---|---|---|---|
| | **PISTOL CONTINUED** | | |
| 15110 | 8mm Auto Blank | 5 | 17.98 |
| * 15116 | 9mm Luger | 5 | 15.98 |
| 15132 | 9mm Makarov | 5 | 16.98 |
| | **RIFLE GROUP A** | | |
| * 12236 | 22 Hornet | 2 | 9.98 |
| 12255 | 220 Swift | 2 | 11.98 |
| * 12238 | 222 Rem | 2 | 9.98 |
| * 12254 | 22-250 Rem | 2 | 9.98 |
| * 12222 | 223 Rem | 2 | 9.98 |
| 12299 | 223 WSSM | 2 | 9.98 |
| * 12223 | 243 Win | 2 | 9.98 |
| 12298 | 243 WSSM | 2 | 9.98 |
| 12256 | 25-06 Rem | 2 | 9.98 |
| 12287 | 260 Rem | 2 | 11.98 |
| * 12224 | 270 Win | 2 | 9.98 |
| * 12225 | 30 Carbine | 2 | 9.98 |
| * 12237 | 300 Win Mag | 2 | 9.98 |
| * 12227 | 30-06 Sprg | 2 | 9.98 |
| * 12226 | 303 British | 2 | 9.98 |
| * 12229 | 30-30 Win | 2 | 9.98 |
| * 12228 | 308 Win, | 2 | 9.98 |
| 12296 | 300WSM | 2 | 9.98 |
| * 12230 | 338 Win Mag | 2 | 9.98 |
| 12270 | 444 Marlin | 2 | 11.98 |
| * 12231 | 45-70 Govt | 2 | 9.98 |
| * 12251 | 6.5 x 55 Swedish | 2 | 9.98 |
| * 12252 | 7mm Rem Mag | 2 | 9.98 |
| 12277 | 7mm STW | 2 | 11.98 |
| * 12234 | 7.62 x 39 | 2 | 9.98 |
| 12233 | 7.62 x 54 Russ | 2 | 11.98 |
| 12247 | 7mm-08 Rem | 2 | 11.98 |
| * 12232 | 7 x 57 Mauser | 2 | 9.98 |
| * 12235 | 8 x 57 Mauser | 2 | 9.98 |
| | **RIFLE GROUP B** | | |
| 12286 | 25-20 Win | 2 | 11.98 |
| 12257 | 25-35 Win | 2 | 12.98 |
| 12258 | 257 Roberts | 2 | 11.98 |
| 12246 | 280 Rem | 2 | 11.98 |
| 12239 | 30 R Blaser | 2 | 11.98 |
| 12284 | 300 Wea Mag | 2 | 11.98 |
| 12272 | 300 Savage | 2 | 11.98 |
| 12263 | 300 Rem Ultra Mag | 2 | 11.98 |

| ITEM # | DESCRIPTION | PACK | RETAIL |
|---|---|---|---|
| | **RIFLE GROUP B CONTINUED** | | |
| 12220 | 32-40 Win | 2 | 11.98 |
| 12250 | 338 Lapua Mag | 2 | 11.98 |
| 12273 | 340 Weatherby | 2 | 11.98 |
| 12248 | 375 HH Mag | 2 | 9.98 |
| 12249 | 375 Flgd Mag NE | 2 | 11.98 |
| 12260 | 375 Win | 2 | 12.98 |
| 12261 | 38-55 Win | 2 | 11.98 |
| 12221 | 40-65 | 2 | 11.98 |
| 12288 | 416 Rem Mag | 2 | 11.98 |
| 12289 | 416 Wea Mag | 2 | 11.98 |
| 12267 | 458 Win Mag | 2 | 11.98 |
| 12295 | 5.6 x 50R Mag | 2 | 11.98 |
| 12241 | 5.6 x 52 R | 2 | 12.98 |
| 12276 | 6mm Rem | 2 | 11.98 |
| 12291 | 6.5 Carcano | 2 | 12.98 |
| 12294 | 6.5 x 57 R | 2 | 11.98 |
| 12278 | 7mm Dakota | 2 | 12.98 |
| 12293 | 7 x 64 Brenneke | 2 | 9.98 |
| 12281 | 7.5 x 55 Swiss | 2 | 11.98 |
| 12264 | 7.7 x 58 JAP | 2 | 11.98 |
| 12242 | 7 x 57 R | 2 | 9.98 |
| 12244 | 7 x 65 R | 2 | 9.98 |
| 12253 | 8mm Rem Mag | 2 | 12.98 |
| 12265 | 8 x 57 R | 2 | 12.98 |
| 12282 | 9 x 57 Mauser | 2 | 11.98 |
| 12240 | 9.3 x 62 Mauser | 2 | 11.98 |
| 12280 | 9.3 x 72 R | 2 | 12.98 |
| 12269 | 9.3 x 74 R | 2 | 9.98 |
| | **GROUP C LARGE RIFLE/NITRO EXPRESS** | | |
| 11413 | 30-378 WB Mag | 1 | 6.98 |
| 11401 | 416 Rigby | 1 | 6.98 |
| 11403 | 450/400 x 3.25 NE | 1 | 6.98 |
| 11405 | 470 NE | 1 | 6.98 |
| 11406 | 475 #2 NE | 1 | 6.98 |
| 11407 | 500 Jeffery | 1 | 6.98 |
| 11408 | 500/465 NE | 1 | 6.98 |
| 11411 | 577 NE | 1 | 6.98 |
| 11412 | 600 NE | 1 | 6.98 |
| 11414 | 700 NE | 1 | 6.98 |
| * 11451 | 50 BMG | 1 | 6.98 |

***Indicates Best Seller**

# SEND TO COMPONENT MANUFACTURER

Gentlemen:

I have read about your products in Lyman's RELOADING HANDBOOK, 48th Ed. Please send me a current catalog showing your reloading components products.

**Name:** _____

**Address:** _____

_____

**Zip Code:** _____

48th Ed. 2

# SPECIAL ORDER FORM

Congratulations! This Lyman purchase qualifies you to obtain our specially selected new products at special pricing below. Please complete the following and mail to Lyman Products.

Name: _____

Address: _____

City/State/Zip: _____

Tel.#: (If we have a question) _____

**Method of Payment (Check one)**

❑ VISA ❑ MasterCard ❑ Discover ❑ Check Enclosed

_____ / _____

Account Number Exp. Date Card Verification No.

_____

Signature (required for credit card orders)

| Product Description | Part No. | Qty. | Retail Price | Promo Price | Total |
|---|---|---|---|---|---|
| **A-Zoom Precision Metal Snap Caps** ( Specify Caliber & Part No ) | | | See Chart | Save $3.00 off Retail | |
| **Butchs Gun Care Products** | | | | | |
| Bore Shine 4oz | 02937 | | 6.65 | 4.99 | |
| Bore Shine 16 oz | 02941 | | 19.95 | 16.95 | |
| Gun Oil | 02948 | | 5.95 | 4.75 | |
| Black Powder Bore Shine | 02949 | | 6.65 | 4.99 | |
| **Butch's Triple Twill Patches** | | | | | |
| 1 ⅛" Square – 22-270 1000 p/bag | 02901 | | 11.65 | 9.95 | |
| 1 ½" Square – 6mm 1000 p/bag | 02913 | | 11.65 | 9.95 | |
| 1 ¾" Square – 270-35 cal. 750 p/bag | 02904 | | 10.75 | 8.95 | |
| 2 ¼" Square - 35-45 cal 500 p/bag | 02906 | | 11.65 | 9.95 | |
| 2 ½" Square - 45-58 cal. 375 p/bag | 02908 | | 10.75 | 8.95 | |
| 3" Square - 10, 12, & 16 ga. 300 p/bag | 02911 | | 8.95 | 7.75 | |
| Pachmayr Master Gunsmith 10 Piece Screwdriver Set | 03050 | | 44.95 | 39.95 | |
| Lyman Electronic Digital Trigger Pull Gauge | 7832248 | | 59.95 | 49.95 | |
| "Powder Pal"Funnel Pan | 7752433 | | 5.95 | 4.75 | |
| Shooters Eyeglass Diopter | 3112020 | | 19.95 | 14.95 | |

Questions? Call Toll Free 1-800-22-LYMAN
Offer valid only in U.S. and Canada. ***Good thru 2005.***

| | |
|---|---|
| Shipping/Handling Charge | **2.00** |
| CT Residents Only: (Add 6% Sales Tax) | |
| Total Amount | |

PRINT NAME AND ADDRESS OF MANUFACTURER BELOW

PLACE
STAMP
HERE

See **Special Order Form** on other side. Tear or cut off card, where shown. When folded and secured, card can be used as mailer by MC/Visa charge customers. For check or money order, use envelope. Any questions, please call toll-free **1-800-22-LYMAN** (except foreign customers, who may call (860) 632-2020). Hours: 9:00a.m. - 3:30 p.m. Eastern time, Monday-Friday.

Fold here and staple or tape order card enclosed. Do not send open!

PLACE
STAMP
HERE

**LYMAN PRODUCTS CORP**
**DEPT 48HB - HB OFFERS**
**475 SMITH STREET**
**MIDDLETOWN, CT 06457**

# Lyman 1200 DPS Digital Powder System

## It's Programmable! Store 20 of Your Favorite Loads

The Revolutionary New ***Lyman 1200 DPS*** with ***PROGRAMMABLE MEMORY SYSTEM*** allows you to program up to 20 of your favorite loads into memory. Simply recall the one you want and dispense the powder quickly without wasted powder type calibration time.

- ***Faster Drop Speeds***
- ***Accurate to ⅒ grain***
- ***Stores and Recalls up to 20 Different Loads***
- ***Use as Electronic Scale or Dispenser***
- ***No Lengthy Powder Type Calibration Down Time***
- ***Auto Trickler Function***
- ***Built-in Removable Dust Cover***

**www.lymanproducts.com**

**Lyman Products 475 Smith Street, Middletown CT 06457**
**Phone: 1-800-22-LYMAN Fax: (860) 632-1699**

# Lyman's New 48th Edition
# The Manual Every Reloader Should Own!

## More Loading Data Than Ever!

- The 48th Edition includes the largest collection of reloading data in any Lyman handbook
- Features an extensive selection of the most popular bullets by Sierra, Hornady, Nosler & Speer
- Premium grade bullets by Barnes, Swift and Combined Technologies
- Complete data on the most popular new calibers such as 480 Ruger, 270 WSM, 300 WSM, 7mm Rem and 300 Rem Short Action Ultra Mags and more!
- Expanded selection of the world's most popular powders!
- Feature articles on ballistics and accuracy by well known writers
- Extensive selection of data for cast bullets

*Lyman Reloading Handbooks are the only manuals that include components from all of the leading manufacturers!*

Part No. 9817048

**www.lymanproducts.com**

Copyright 2003
Lyman Products Corporation

Printed in USA

**Lyman Products 475 Smith Street, Middletown CT 06457**

0 11516 97048 0